Micro Mist Separator

Series AMD

Series AMD can separate and remove aerosol state oil mist in compressed air and remove carbon or dust of more than 0.01μm. It should be used as prefilter for compressed air in precision instruments or for clean room requirements.

Order Made P.4.6-14

Model

Model	AMD150	AMD250	AMD350	AMD450	AMD550	AMD650	AMD850
Rated flow (ℓ/min (ANR))(1)	200	500	1000	2000	3500	6000	12000
Port size (Nominal size B)	1/8, 1/4, 3/8	1/4, 3/8, 1/2	3/8, 1/2, 3/4	1/2, 3/4, 1	$3^1/_2$, 1	1, $1^1/_2$	$1^1/_2$, 2
Weight (kg)	0.38	0.55	0.9	1.4	2.1	4.2	10.5

Note 1) Max. flow capacity at a pressure of 0.7MPa.
It varies depending on operating pressure. Refer to "Flow Characteristics" (p.4.6-9) and figure of "Max. air flow" (p.4.6-8).

Standing Style/Model

Model	AMD800	AMD900	AMD1000
Rated flow (ℓ/min(ANR))	8000	24000	40000
Port size (Nominal size B)	2^B Flange	$2^B/3^B/4^B$ Flange	$4^B/6^B$ Flange
Weight (kg)	100	220	430

Piping Support Style/Model

Model	AMD801	AMD901
Rated flow (ℓ/min(ANR))	8000	24000
Port size (Nominal size B)	2^B Flange	$2^B/3^B/4^B$ Flange
Weight (kg)	50	140

Specifications

Fluid	Compressed air
Max. operating pressure	1.0MPa
Min. operating pressure(1)	0.05MPa
Proof pressure	1.5MPa
Ambient and fluid temperature	5 to 60°C
Filtration	0.01μm(95% particle size collection)
Oil mist removal rate	Max.0.1mg/m³(ANR)(2) (At oil saturation of element, less than 0.08ppm)
Element life	2 years or when pressure drop reaches 0.1MPa

Note 1) With N.O. auto drain: 0.15MPa
Note 2) At oil mist removal rate blowing compressor is 30mg/m³(ANR)

Accessories (Options)

Applicable models	AMD150	AMD250	AMD350	AMD450	AMD550	AMD650	AMD850
Bracket assembly (With cap bolt, spring washer)	BM51	BM52	BM53	BM54	BM55	BM56	BM57

∗Please refer to "Precautions" on p.4.6-13.

Symbol

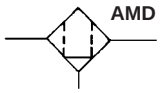

How to Order

AMD150 to AMD850

AMD 250 — [ ] 03 B — J

Body size

150	1/8
250	1/4
350	3/8
450	1/2
550	3/4
650	1
850	1 1/2

Thread

—	Rc (PT)
F	G (PF)
N	NPT

Port size

01	1/8B	**06**	3/4B
02	1/4B	**10**	1B
03	3/8B	**14**	1 1/2B
04	1/2B	**20**	2B

Accessories(Options)*

Symbol	Description
—	None
B	Bracket
C	N.C. auto drain
D	N.O. auto drain

* Refer to the table below for accessory/option combinations

Options

J	Drain guide 1/4B female thread
R	IN → OUT reversal
T	Element service indicator

Please refer to p.4.7-7 regarding "How to Order" of case assembly.

Table: Accessory/Option combinations

◎ Available ☐ Not available ◯ Depending on model

Accessories /Options			Accessories		Options			Applicable models						
			C	**D**	**J**	**R**	**T**	**AMD150**	**AMD250**	**AMD350**	**AMD450**	**AMD550**	**AMD650**	**AMD850**
Accessories	N.C. auto drain	**C**				◎	◎	◎	◎	◎	◎	◎		
	N.O. auto drain	**D**				◎	◎	◎	◎	◎	◎	◎	◎	◎
Options	Drain guide 1/4B	**-J**				◎	◎	◎	◎	◎	◎	◎	◎	
	IN → OUT reversal	**-R**	◎	◎	◎		◎	◎	◎	◎	◎	◎	◎	◎
	Element service indicator	**-T**	◎	◎	◎	◎		◎	◎	◎	◎	◎	◎	◎

AMD800 to AMD1000 (Self-standing style)

AMD 8 00 — 20

Body size

8
9
10

Port size

20	2BFlange
30	3BFlange
40	4BFlange
60	6BFlange

Style

00	With manual drain cock
10	With auto drain

AMD801/901 (Piping support style)

AMD 8 01 — 20

Body size

8
9

Port size

20	2BFlange
30	3BFlange
40	4BFlange

Style

01	With manual drain cock
11	With auto drain

How to Select

Select the model in accordance with the following procedure taking the inlet pressure and max. air flow into consideration.
(Example) Inlet pressure: 0.6MPa
Max. air flow capacity: 5m³/min.(ANR)

① Select the point of contact A of inlet pressure and max. air flow capacity in the graph.
② Select the type whose max. air flow capacity is over that point; AMD650.

Note: Make sure to select a model that has the maximum flow rate line above the obtained intersecting point. With a model that has the maximum flow rate line below the obtained intersecting point, the flow rate will be exceeded, thus leading to a problem such as being unable to satisfy the specifications.

Max. Air Flow

Max. Air Flow

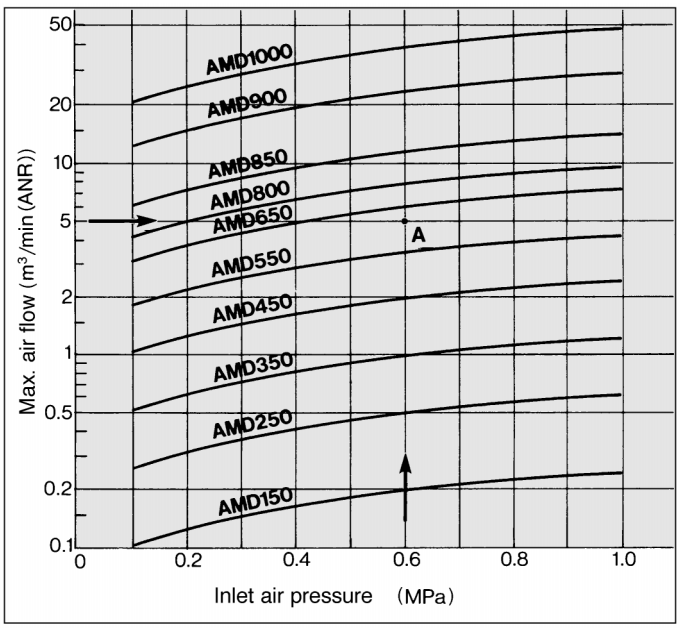

Flow Characteristics/Select the model taking the max. flow capacity into consideration. ——— Element oil saturation - - - - Initial condition

Note) Compressed air over max. flow line in the table below may not meet the specifications of the product. It may cause damage to the element.

AMD150 1/8B

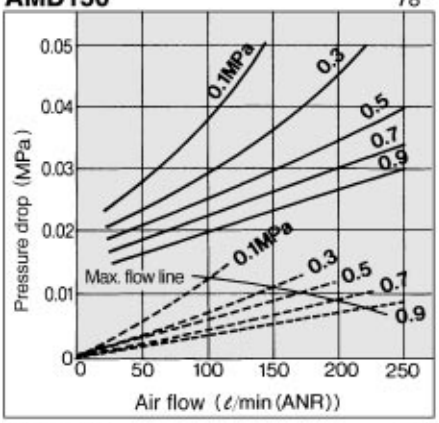

AMD550 3/4B

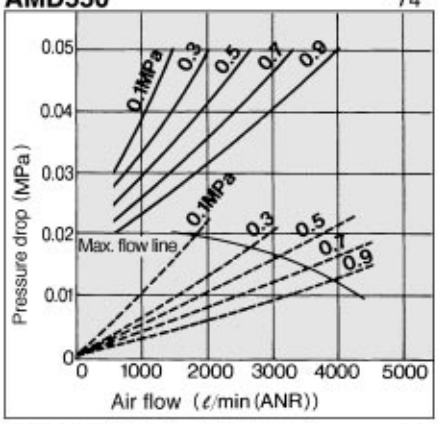

AMD900/901 2B

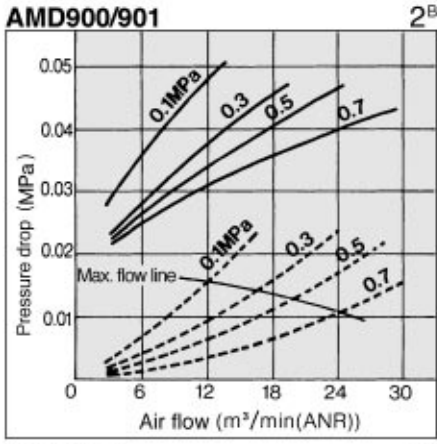

AMD250 1/4B

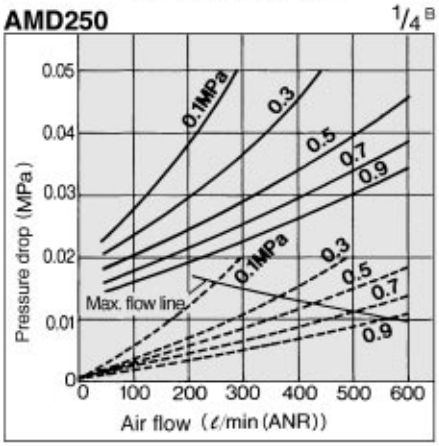

AMD650 1B

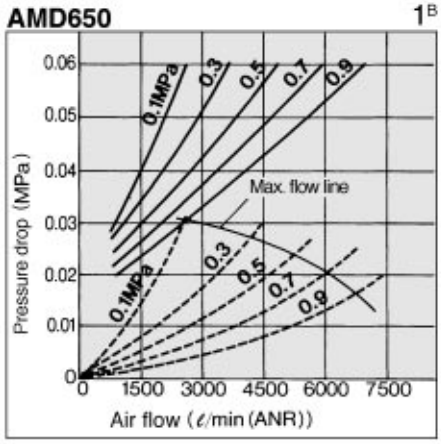

AMD1000 4B

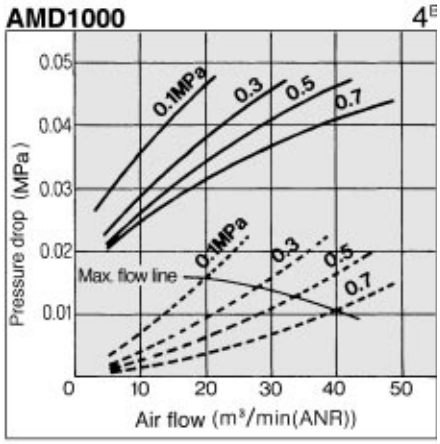

AMD350 3/8B

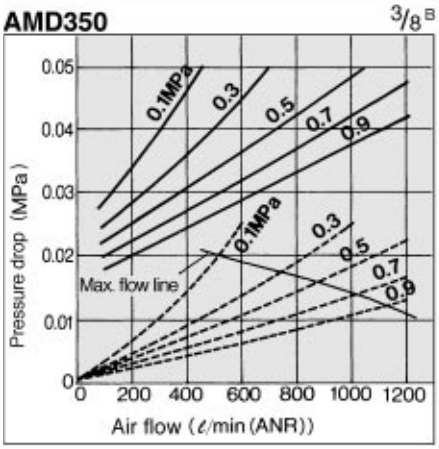

AMD800/801 2B

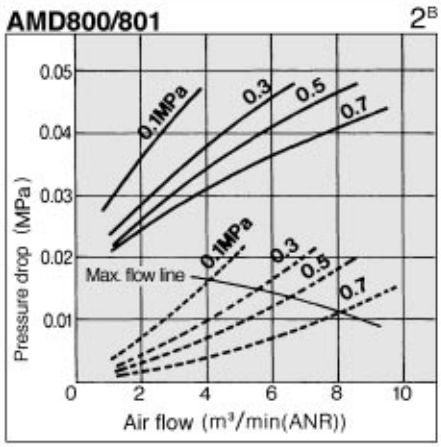

AMD450 1/2B

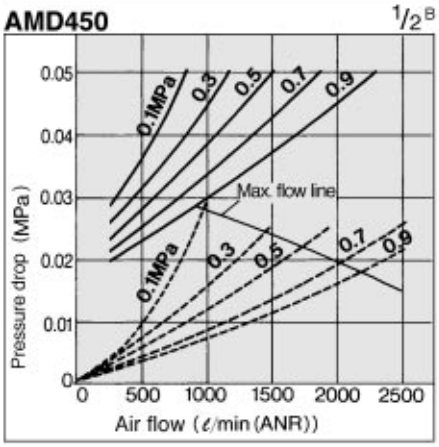

AMD850 1 1/2B

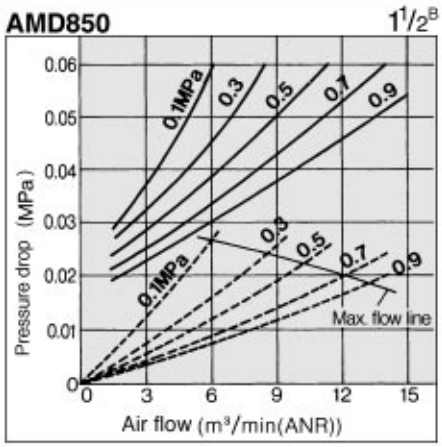

Construction

AMD150 to AMD650

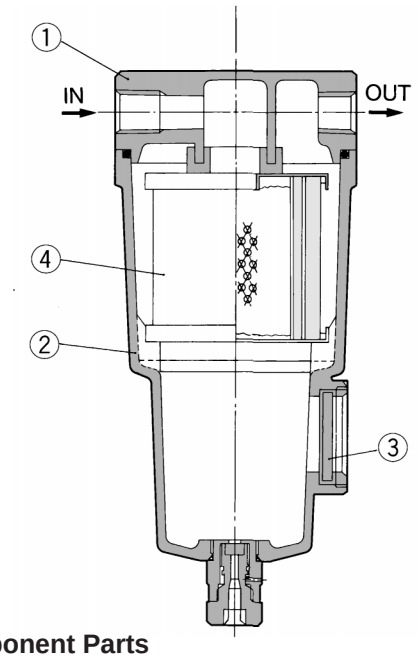

AMD850

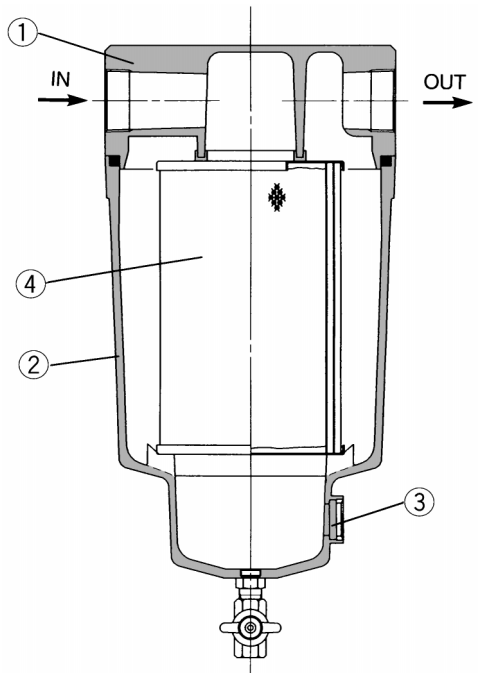

Component Parts

No.	Description	Material	Note
①	Body	Aluminum die cast	Chrome treatment (Epoxy coating on inner surface)
②	Housing	Aluminum die cast*	
③	Sight glass	Tempered glass	

*AMD850 is aluminum casting

Note) Sight glass is indicated in the figure above for easy understanding of parts, however mounting position is different. Refer to dimensions on p.4.6-11 and p.4.6-12 for details.

Replacement Parts

No.	Description	Material	Part No.						
			AMD150	**AMD250**	**AMD350**	**AMD450**	**AMD550**	**AMD650**	**AMD850**
④	Element assembly	Glass fiber NBR	AMD-EL150	AMD-EL250	AMD-EL350	AMD-EL450	AMD-EL550	AMD-EL650	AMD-EL850

*With gasket and O ring

AMD800 to 1000

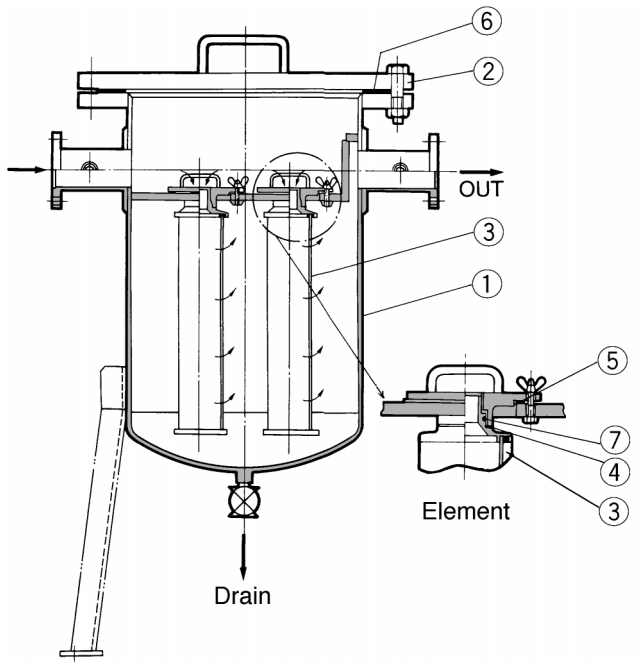

Component Parts

No.	Description	Part No.	
		AMD800/900/1000	**AMD801/901**
①	Filter case	SGP-E, SS400	SGP-E, SS400
②	Cover	SS400	SGP-E, SS400

Replacement Parts

No.	Description	Material	Part No.				
			AMD800	**AMD801**	**AMD900**	**AMD901**	**AMD1000**
③	Element	—	63174	63174	63174 3 pcs.	63174 3 pcs.	63174 5 pcs.
④	Packing	NBR	63148	63148	63148 3 pcs.	63148 3 pcs.	63148 5 pcs.
⑤	Packing	NBR	O.D.112 X I.D.90 X T3	–	O.D.112 X I.D.90 X T3 3 pcs.	—	O.D.112 X I.D.90 X T3 5 pcs.
⑥	Gasket	V#6500	O.D.268 X I.D.225 X T3	O.D.218 X I.D.175 X T3	AL-63S	AL-62S	AL-31S
⑦	O ring	NBR	JIS B2401G35 1 pc.	JIS B2401G35 1 pc.	JIS B2401G35 3 pcs.	JIS B2401G35 3 pcs.	JIS B2401G35 5 pcs.

CAD

Dimensions: AMD150 to AMD650

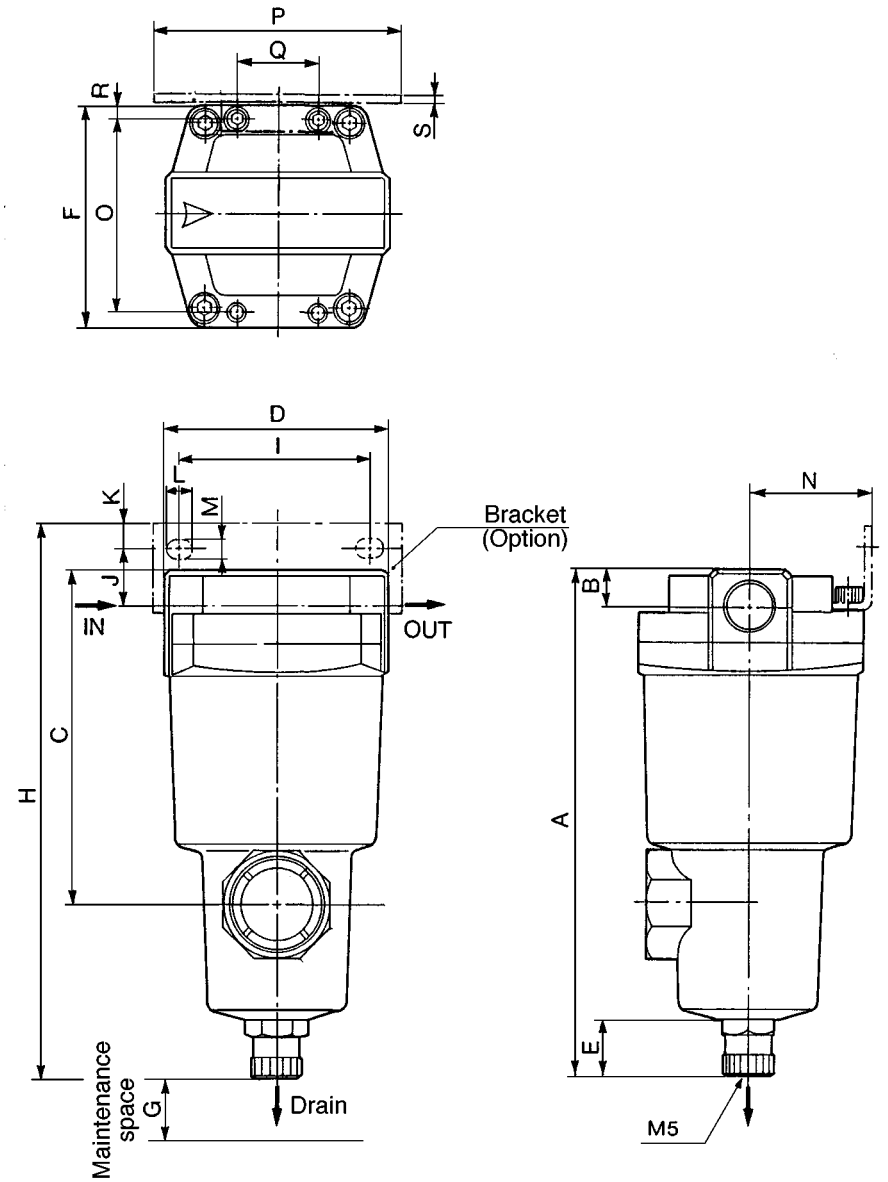

Accessories

D: With auto drain (N.O.)

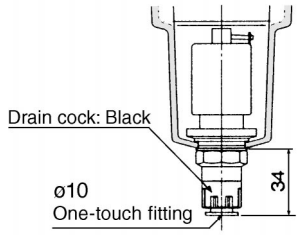

C: With auto drain (N.C.)

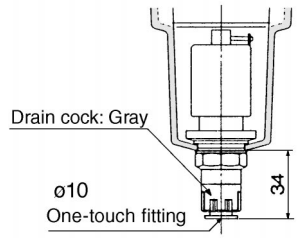

∗N.C. auto drain not available for AM650.

Options

J: With drain guide

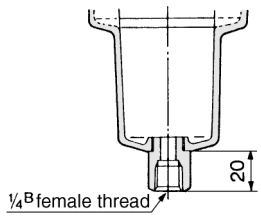

T: With element service indicator

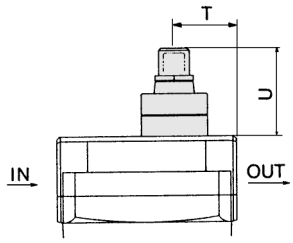

Model	Port size (Nominal size B)	A	B	C	D	E	F	G	Dimensions with mounting bracket												Element service indicator	
									H	I	J	K	L	M	N	O	P	Q	R	S	T	U
AMD150	1/8, 1/4, 3/8	159	13	100	63	20	63	10	166	56	15	5	9	5.5	35	54	70	26	4.5	1.6	24	37
AMD250	1/4, 3/8	172	13	113	76	20	76	10	187	66	20	8	12	6	40	66	84	28	5	2.0	27	37
	1/2	178	16	119	76	20	76	10	187	66	17	8	12	6	40	66	84	28	5	2.0	27	37
AMD350	3/8, 1/2	204	16	145	90	20	90	10	218	80	22	8	14	7	50	80	100	34	5	2.3	32	37
	3/4	210	19	151	90	20	90	10	218	80	19	8	14	7	50	80	100	34	5	2.3	32	37
AMD450	1/2, 3/4	225	19	166	106	20	106	10	241	90	25	10	14	9	55	88	110	50	9	3.2	37	37
	1	232	22	173	106	20	106	10	241	90	21	10	14	9	55	88	110	50	9	3.2	37	37
AMD550	3/4, 1	259	22	200	122	20	122	10	277	100	30	10	16	9	65	102	130	60	10	4.5	39	37
AMD650	1, 1 1/2	311	32	253	160	20	160	10	334	150	40	15	20	11	85	136	180	76	12	4.5	55	37

CAD

AMD150·····SAM, #1 AMD450·····SAM, #4
AMD250·····SAM, #2 AMD550·····SAM, #5
AMD350·····SAM, #3 AMD650·····SAM, #6

CAD

Dimensions: AMD850

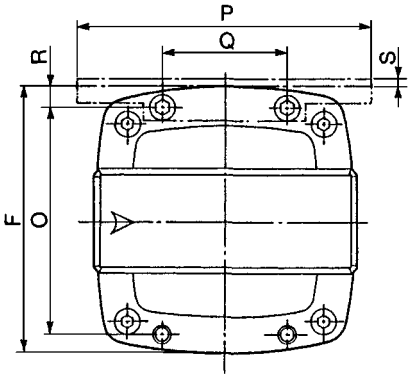

Accessory

D: With auto drain (N.O.)
for AMD850

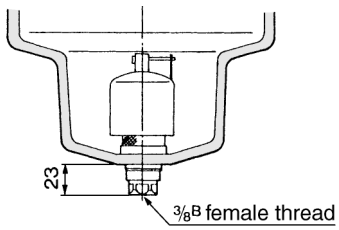

Options

T: With element service indicator

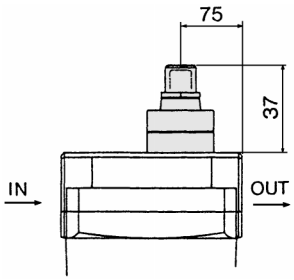

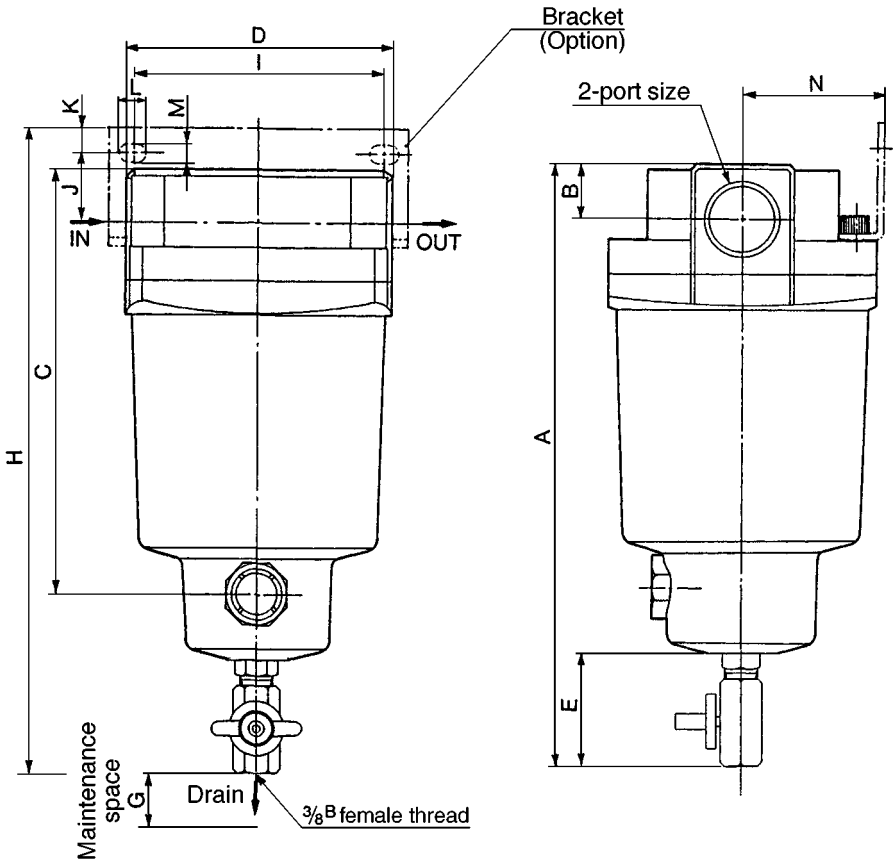

Model	Port size (Nominal size B)	A	B	C	D	E	F	G	Dimensions with mounting bracket											
									H	I	J	K	L	M	N	O	P	Q	R	S
AMD850	1 1/2 , 2	460.5	42	348	220	57.5	220	10	463.5	180	30	15	24	13	120	184	220	110	18	6

CAD AMD850·····SAM, #7

Dimensions: AMD801/901/800/900/1000

AMD801/901

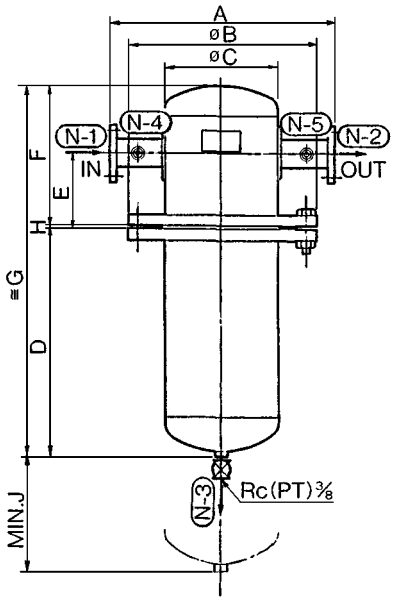

ORIENTATION

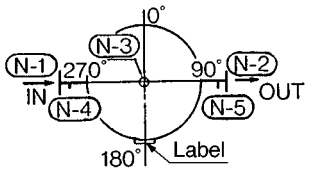

Model	Connect (Flange)	A	øB	øC	D	E	F	G	H	J
AMD801	2^B	400	280	6^B	760	150	270	1033	3	887
AMD901	$2^B/3^B/4^B$	620	445	12^B	795	300	520	1318	3	972

AMD800/900/1000

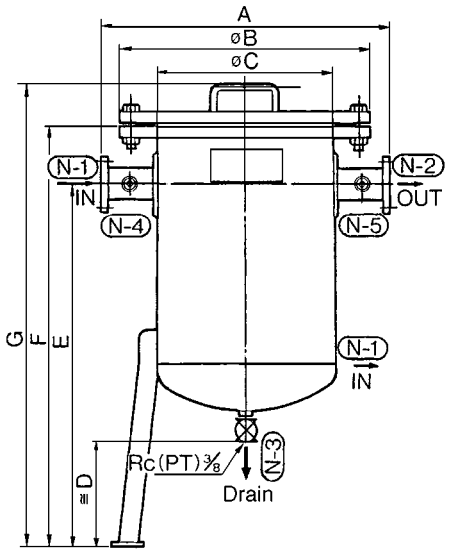

ORIENTATION

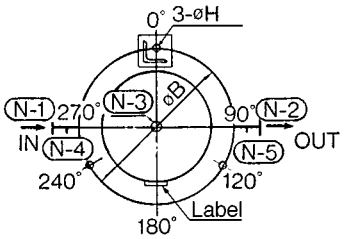

Model	Connect(Flange)	A	øB	øC	D	E	F	G	H	Anchor bolt
AMD800	$2^B/3^B$	500	300	8^B	300	1300	1430	1520	20	M16 X ℓ400
AMD900	$2^B/3^B/4^B$	720	560	400	300	1320	1480	1585	24	M20 X ℓ500
AMD1000	$4^B/6^B$	870	745	550	300	1380	1610	1740	24	M20 X ℓ500

② When the element has reached its replacement interval, replace it immediately with a new element. Replace the O ring, the gasket, and the element with new parts.
③ When using models AMD150 to AMD850 with a drain valve, drain guide, or a ball valve, discard the drainage before the drainage level reaches the center of the sight glass. If the drainage is not discarded properly, it will flow to the secondary side.

⚠ Precautions

Be sure to read before handling. Refer to p.0-26 and 0-27 for Safety Instructions and common precautions on the products mentioned in this catalog, and refer to p.4.0-5 to 4.0-7 for precautions on every series.

Design

⚠ Caution

① Design the layout so that the mist separator is installed in an area that is less susceptible to pulsations. The element could be damaged if the difference in internal and external pressures exceeds 0.1MPa.
② When using the auto drain, connect the drain piping in the following range:
Normally closed (N.C.) }
Normally open (N.O.) } ·····
Because tube fittings are provided, use a tube with a bore of 10mm, and keep the overall pipe length within 5m.
AM850 type (N.O) ·····
Use a tube with a bore of 9mm or more, and keep the overall pipe length within 2.8m.
If the normally open (N.O.) auto drain is used, because it is designed so that the valve will not open unless the air pressure is 0.15MPa or higher, air could continue to blow out of the drainage discharge area if an air compressor with a small air discharge volume is used. Therefore, when using a compressor that is smaller than 3.7kW, make sure to use the normally closed (N.C.) auto drain.
③ The bracket that is provided with the product is for supporting the product itself. Thus, it cannot support the piping or other items that are connected. If these items need to be supported, provide an additional support.
④ A Class 2 Pressure Vessel Pressure Resistance Certificate is provided with those below, which are considered to be Class 2 pressure vessels. Make sure to store the certificate in a safe location.
Micromist separator ····· AMD900, 1000, 901

Mounting

⚠ Caution

① Verify the direction of the flow of the compressed air and the "▷" mark that indicates the inlet of the product before connecting. It cannot be used if connected in the opposite direction.
② Make sure to install this product on horizontal piping. If it is installed diagonally, laterally, or upside down, the drainage that is separated by the element will splash to the secondary side.

Maintenance check

⚠ Caution

① The replacement interval for the element for models AMD150 to AMD850 is when the pressure drop reaches 0.1MPa or after 2 years of operation, whichever comes first. A pressure drop can be verified with the type with a clogging checker (-T) or with the type with a pressure differential gauge (Made to Order).
The replacement interval of the element for models AMD800 to AMD1000, AMD801, and AMD901 is when the pressure drop reaches 0.1MPa or after 1 year of operation, whichever comes first. A pressure drop can be verified with a pressure gauge.
The micromist separator (with a pressure gauge) is an Made to Order.
↖For notes ② and ③, refer to the left.

Series AMD
Made to Order Specifications

Please contact SMC for detailed specifications, dimensions or delivery.

Order Made

① With Pressure Differential Gauge (GD40-2-01)

A pressure differential gauge can be installed in the body to check the life of the filter element. It allows for easier piping and compact size.

Specification

Applicable model	AMD150 to AMD850

How to Order

*Refer to "How to Order" for standard type (p.4.6-8).

AMD ☐-☐ ☐ ☐-☐ X6

- Body size*
- Thread*
- Port size*
- Accessories*
- Options (Not available with element service indicator "T")*

Dimensions

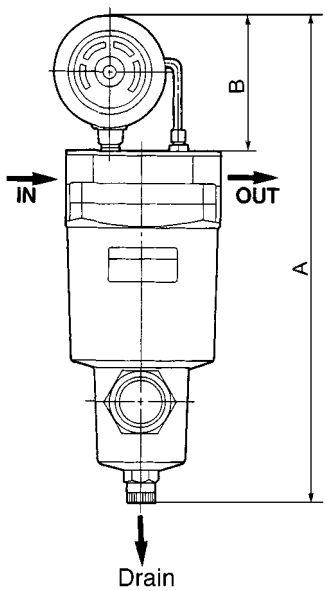

Model	Port size	A	B
AMD150	1/8, 1/4, 3/8	239	80
AMD250	1/4, 3/8	252	80
	1/2	258	
AMD350	3/8, 1/2	284	80
	3/4	290	
AMD450	1/2, 3/4	305	80
	1	312	
AMD550	3/4, 1	339	80
AMD650	1, $1^1/_2$	391	80
AMD850	$1^1/_2$, 2	540.5	80

② With IN-OUT Flange

For easier flange piping.

Specification

Applicable model	AMD450 to AMD850

How to Order

*Refer to "How to Order" for standard type (p.4.6-8).

AMD ☐-☐ ☐ ☐-☐ X15

- Body size*
- Thread*
- Port size*
- Accessories*
- Options*

Dimensions

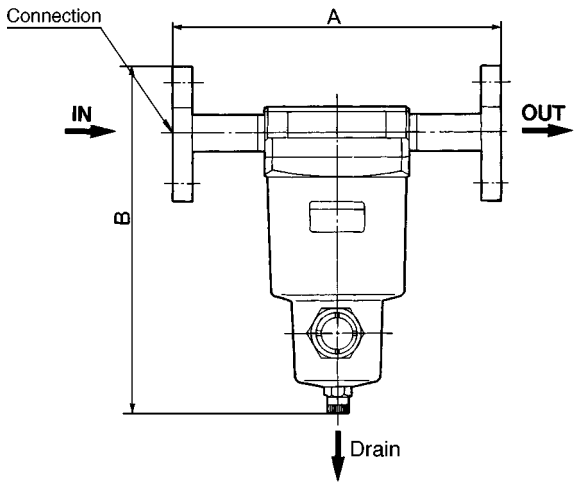

Model	Connection	A	B
AMD450	3/4B/FF/10K	240	256
AMD550	1B/FF/10K	260	300
AMD650	$1^1/_2$ B/FF/10K	300	349
AMD850	2B/FF/10K	380	496.5

⚠ Precaution

Please refer to p.4.5-7 for with pressure differential gauge (GD40-2-01).