Plug-in

Compact 5-Port Solenoid Valve

CE RoHS New

Size reduction possible thanks to a flow increase.
This leads to space saving, weight reduction, and a large flow rate.

Possible to drive Ø40*1 bore cylinders

JSY1000

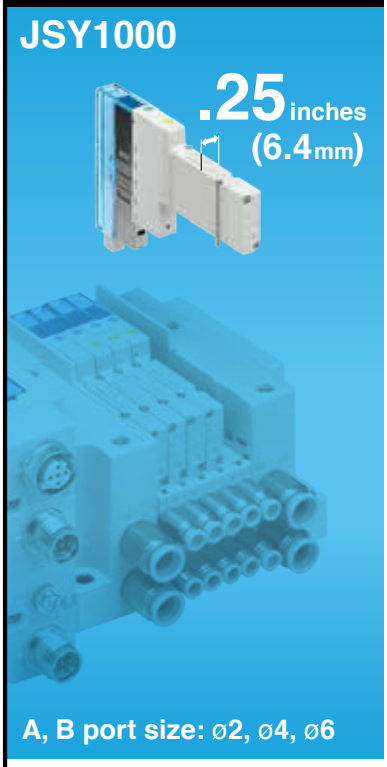

A, B port size: ø2, ø4, ø6

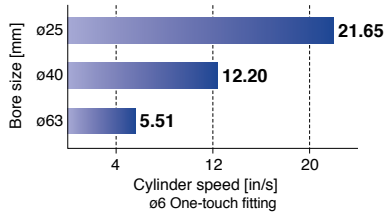

Possible to drive Ø50*1 bore cylinders

JSY3000

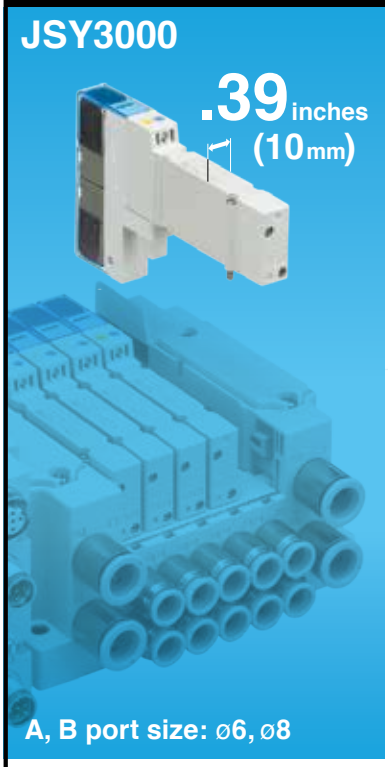

A, B port size: ø6, ø8

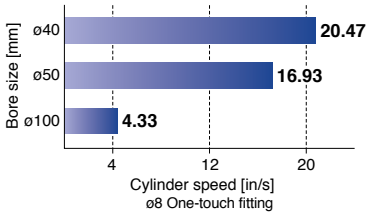

Possible to drive Ø80*1 bore cylinders

JSY5000

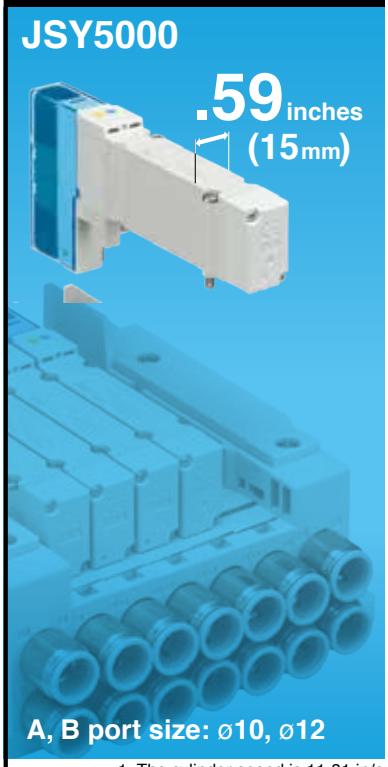

A, B port size: ø10, ø12

*1 The cylinder speed is 11.81 in/s

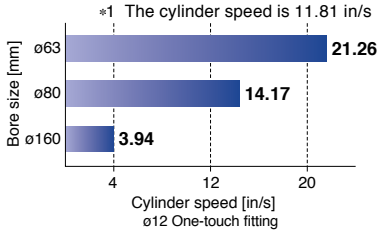

Refer to pages 7 to 10 for detailed conditions regarding the above cylinder speed.

JSY1000

JSY3000

JSY5000

JSY1000/3000/5000 Series

NC390-A
(ES11-110A)

Series Map

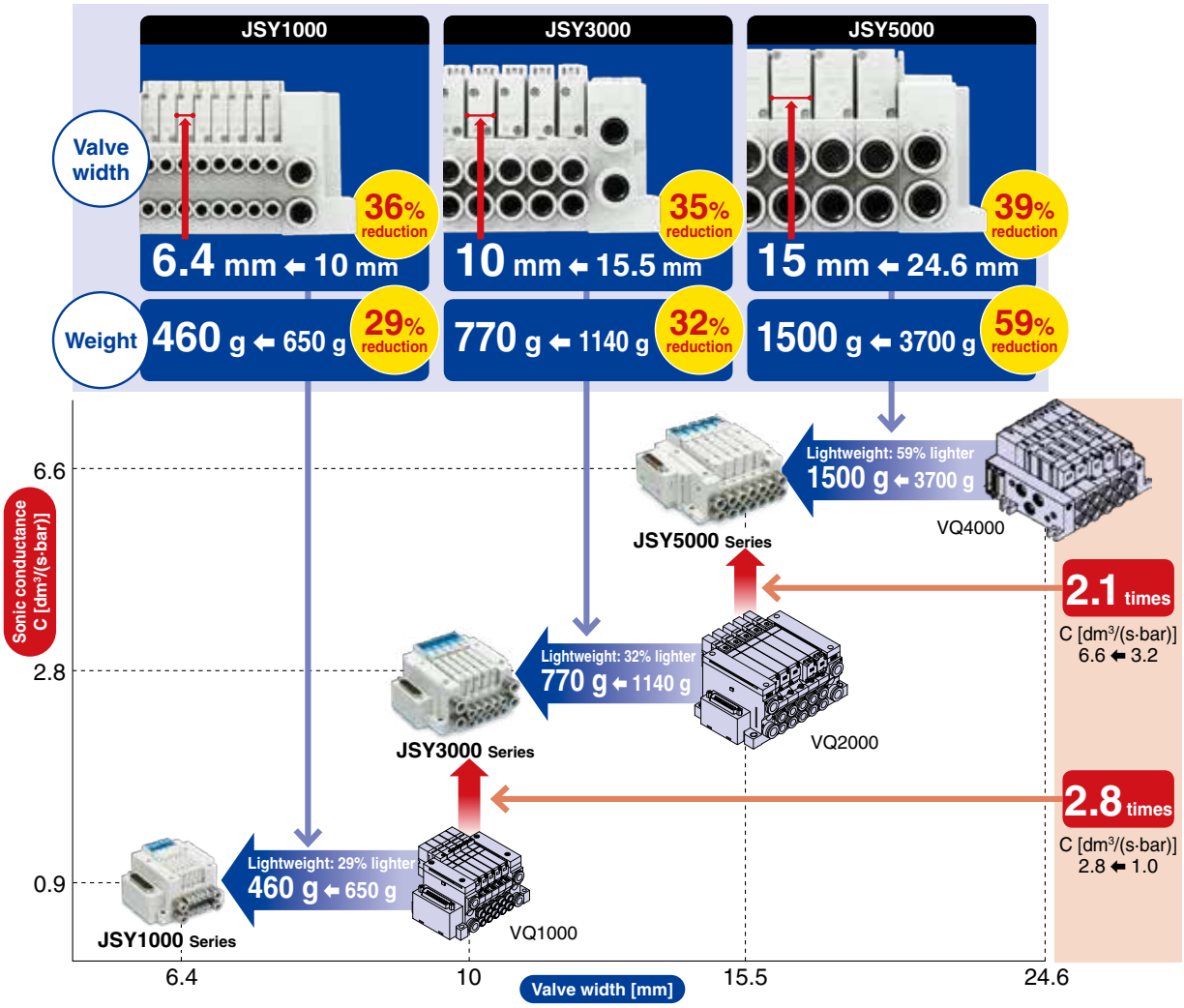

Power Consumption

	JSY3000/5000 *1	JSY1000
With power saving circuit	0.1 w	0.2 w

*1 Made to Order

	JSY3000/5000 *2
Standard	0.4 w

*2 JSY1000 series available as power saving type only.

Connector Type Manifold

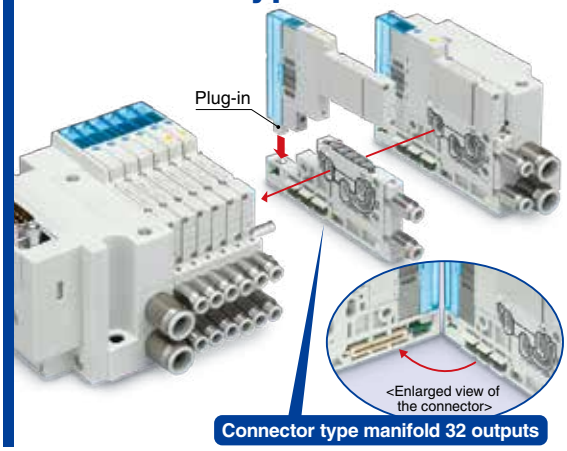

Connector type manifold 32 outputs

4-Position Dual 3-Port Valve Available

- Two 3-port valves built into one body

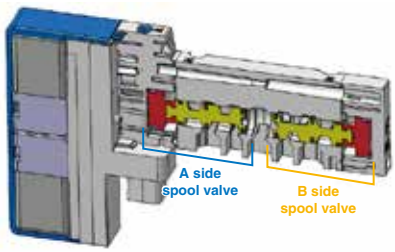

- 3-port valves on the A and B sides can operate independently.
- When used as a 3-port valve, only half the number of stations is required.
- Can also be used as a 4-position, 5-port valve

- Combination examples

Model	A side	B side
JSY□A0□	N.C. valve	N.C. valve
JSY□B0□	N.O. valve	N.O. valve
JSY□C0□	N.C. valve	N.O. valve

Wiring

		JSY1000	JSY3000	JSY5000
D-sub Connector	IP20 Compact type FC type p. 19	●	●	
	IP40 Connector entry direction adjustable F type (Lateral / Upward) p. 19	●	●	●
	IP67 FW type p. 19		●	●
Flat Ribbon Cable	Compact type PC/PGC/PHC type p. 19	●	●	
	Connector entry direction adjustable P/PG/PH type (Lateral / Upward) p. 19	●	●	●
Terminal Block Box	Spring type TC type p. 41	●	●	●
	T type p. 41	●	●	●
Lead Wire	p. 53	●	●	●

Serial Transmission Compatible Protocols

Integrated Type (For Input/Output) Serial Transmission System (Fieldbus System)
EX600
p. 61
DeviceNet™
PROFIBUS DP
CC-Link
EtherNet/IP™
EtherCAT
PROFINET
EtherNet/IP™ compatible wireless master
PROFINET compatible wireless master

Integrated Type (For Output) Serial Transmission System
EX260
p. 77
DeviceNet™
PROFIBUS DP
CC-Link
EtherNet/IP™
EtherCAT
PROFINET
Ethernet POWERLINK

Integrated Type (For Input/Output) Serial Transmission System
EX250
p. 71
DeviceNet™
PROFIBUS DP
CC-Link
EtherNet/IP™
CANopen
AS-Interface

Integrated Type (For Output) Serial Transmission System
EX120
p. 83
DeviceNet™
CC-Link
OMRON CompoBus/S
CompoNet™

Series Variations

	Sonic conductance C [dm³/(s·bar)] 4/2→5/3 (A/B→EA/EB) 4(A), 2(B) port		Type of actuation		Rated voltage	Port size: 4(A), 2(B) port ø2	ø4	ø6	ø8	ø10	ø12	1(P), 3/5(E) port	
JSY1000	ø4	0.87	**2-position single** 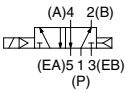	**3-position pressure center** 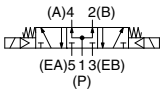	24 VDC	●	●					ø8	
JSY1000	ø6	0.91	**2-position double** 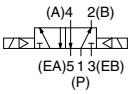	**4-position dual 3-port valve N.C. valve x 2 pcs.** 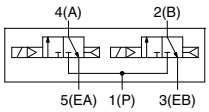				●						
JSY3000	ø8	2.77	**3-position closed center** 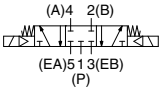	**N.O. valve x 2 pcs.** 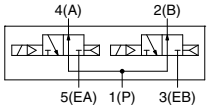				●	●			ø10	
JSY5000	ø12	6.59	**3-position exhaust center** 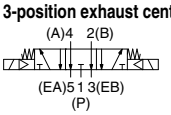	**N.C. valve, N.O. valve 1 pc. of each** 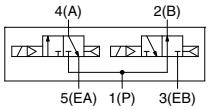						●	●	ø12	

● Standard ○ Option ▲ Made to Order

Application Examples

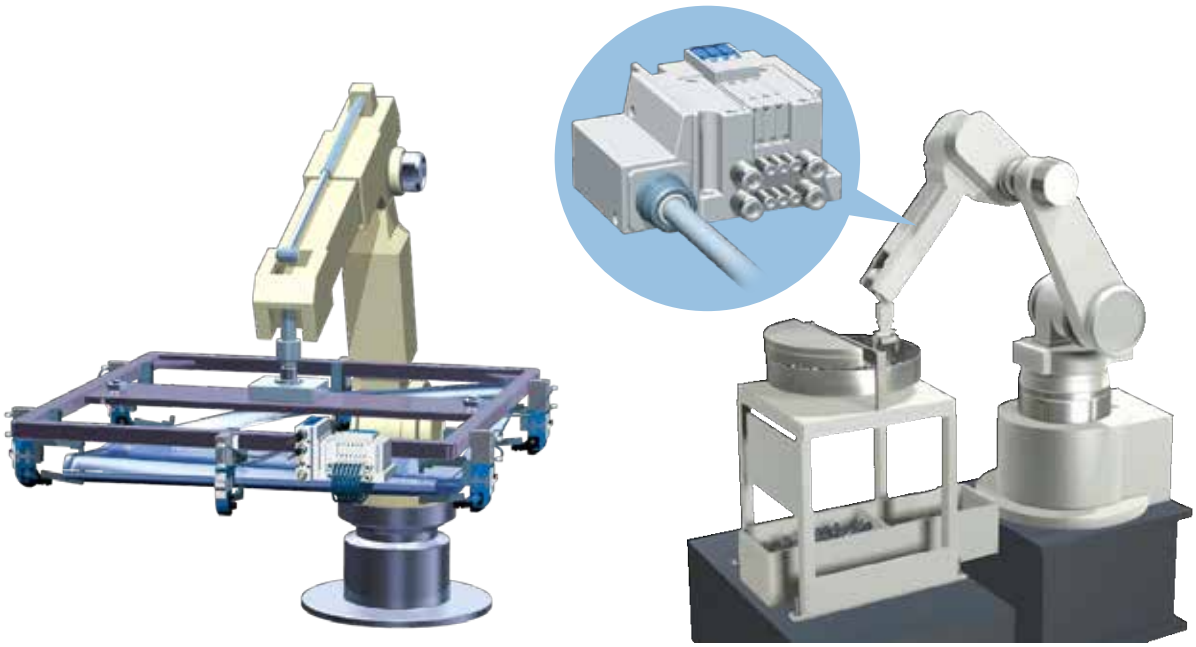

	Pitch width [mm]	Wiring		Manifold Options							Valve Options				
		Common specifications													
		Positive common	Negative common	Blanking plate	Individual SUP spacer	Individual EXH spacer	SUP/EXH blocking disk	Label for blocking disk	Silencer (One-touch fitting connection type)	Built-in silencer	Vacuum/Low pressure specification	Different pressures	Reverse pressure	Mixed fitting sizes	Enclosure IP67*1
	6.5	●	●	○ p. 111	○ p. 111	○ p. 111	○ p. 112	○ p. 112	○ p. 112	●	▲ External pilot	○ Individual SUP	▲ External pilot	●	—
	9														
	11.5														●
	16														●

*1 Refer to the "Manifold Specifications" on pages 15 and 16 for details on IP67.

Manifold Options

Individual SUP spacer

p. 111

When the same manifold is used for different pressures, an individual SUP spacer is used as a supply port for different pressures.

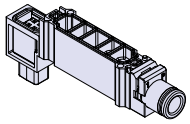

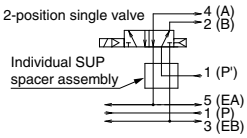

Circuit diagram

(Mounting example of a 2-position single valve)

Individual EXH spacer

p. 111

When valve exhaust affects other stations due to the circuit configuration, this spacer is used for individual valve exhaust.

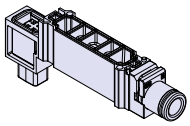

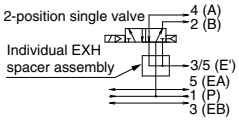

Circuit diagram

(Mounting example of a 2-position single valve)

Blanking plate

p. 111

Used when valve additions are expected or for maintenance.

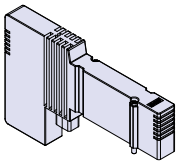

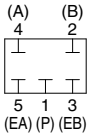

Circuit diagram

SUP/EXH blocking disk

p. 112

(For connector type manifold, Type 10)

[SUP blocking disk]

By inserting the SUP blocking disk in the pressure supply passage of the manifold valve, can provide two different high and low pressure in one manifold.

[EXH blocking disk]

By inserting the EXH blocking disk in the exhaust passage of the manifold valve, can separate the exhaust from the valve so it does not affect the other valves. It can also be used for the manifold for the positive pressure and vacuum mixed manifold. (2 pieces are required to block EA/EB both sides of the EXH.)

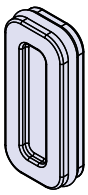

Silencer (One-touch fitting connection type)

p. 112

This silencer can be mounted to the 3/5 (E: EXH) port of the manifold in one step.

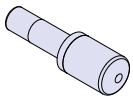

Label for blocking disk

p. 112

Label to indicate and confirm on the manifold where the SUP/EXH blocking disk assemblies were inserted. (3 labels of each)

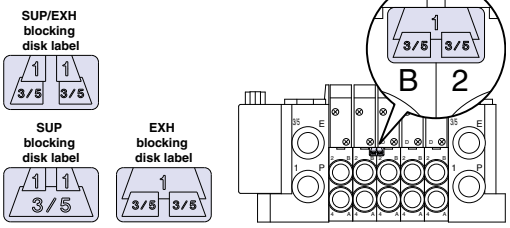

Tube Releasing Tool

This tool is used for removing the tube from port A and B.

p. 109

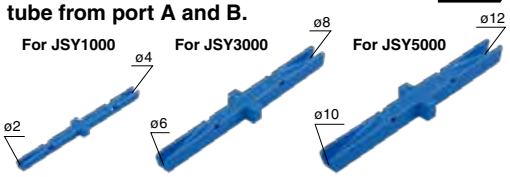

JSY5000
JSY3000
JSY1000

CONTENTS

Optimum Actuation Size Chart of Air Cylinder ..... p. 7
Valve Specifications ..... p. 11
Response Time ..... p. 12
Valve Weight ..... p. 12
Valve Construction ..... p. 13
Valve Replacement Parts: Pilot Valve ..... p. 14

Plug-in Connector Connecting Base
Manifold Specifications ..... p. 15
Manifold Weight ..... p. 15
Manifold Flow Rate Characteristics ..... p. 15
Connector Wiring Layout ..... p. 17

D-sub connector

Flat ribbon cable

D-sub Connector, Flat Ribbon Cable [IP20/40/67]
How to Order ..... p. 19
Dimensions D-sub Connector (IP40/Connector Entry Direction Adjustable): F ..... p. 21
D-sub Connector (IP67): FW ..... p. 25
D-sub Connector (IP20/Compact Type): FC ..... p. 27
Flat Ribbon Cable (IP40/Connector Entry Direction Adjustable): P/PG/PH ..... p. 30
Flat Ribbon Cable (IP20/Compact Type): PC/PGC/PHC ..... p. 34
Electrical Wiring Specifications: D-sub Connector Cable ..... p. 37
Electrical Wiring Specifications: Flat Ribbon Cable Connector ..... p. 38

Terminal block box

Spring Type Terminal Block Box, Terminal Block Box
How to Order ..... p. 41
Dimensions Spring Type Terminal Block Box ..... p. 43
Terminal Block Box ..... p. 47
Connection/Electrical Wiring Specifications ..... p. 51

Lead wire

Lead Wire
How to Order ..... p. 53
Dimensions ..... p. 55
Electrical Wiring Specifications ..... p. 59

EX600

EX600 Integrated Type (For Input/Output) Serial Transmission System (Fieldbus System)
How to Order ..... p. 61
Dimensions ..... p. 63

EX250

EX250 Integrated Type (For Input/Output) Serial Transmission System
How to Order ..... p. 71
Dimensions ..... p. 73

EX260

EX260 Integrated Type (For Output) Serial Transmission System
How to Order ..... p. 77
Dimensions ..... p. 79

EX120

EX120 Integrated Type (For Output) Serial Transmission System
How to Order ..... p. 83
Dimensions ..... p. 85

Type 10/Side Ported: Common Dimensions
(External Pilot, Built-in Silencer/Mixed Size, Straight Port Type) ..... p. 89

Manifold Exploded View [By Wiring] ..... p. 94
D-sub Connector/Flat Ribbon Cable (IP40/Connector Entry Direction Adjustable) ..... p. 95
D-sub Connector (IP67) ..... p. 96
D-sub Connector/Flat Ribbon Cable (IP20/Compact Type) ..... p. 97
Spring Type Terminal Block Box ..... p. 98
Terminal Block Box ..... p. 99
Lead Wire ..... p. 100
EX600 ..... p. 101
EX250 ..... p. 103
EX260 ..... p. 104
EX120 ..... p. 105

Manifold Exploded View [Common Parts] ..... p. 106
Type 10: How to Increase Connector Type Manifolds ..... p. 106
JJ5SY1-10, JJ5SY3-10, JJ5SY5-10/Manifold Parts Nos. ..... p. 107

One-touch Fittings, Plug, Clip, Port Plate, Tube Releasing Tool ..... p. 109
Manifold Options ..... p. 110

Made to Order ..... p. 114
Specific Product Precautions ..... p. 115
Model Index ..... p. 120
Safety Instructions ..... Back cover

Optimum Actuation Size Chart of Air Cylinder

For JSY1000, A, B port: ø4

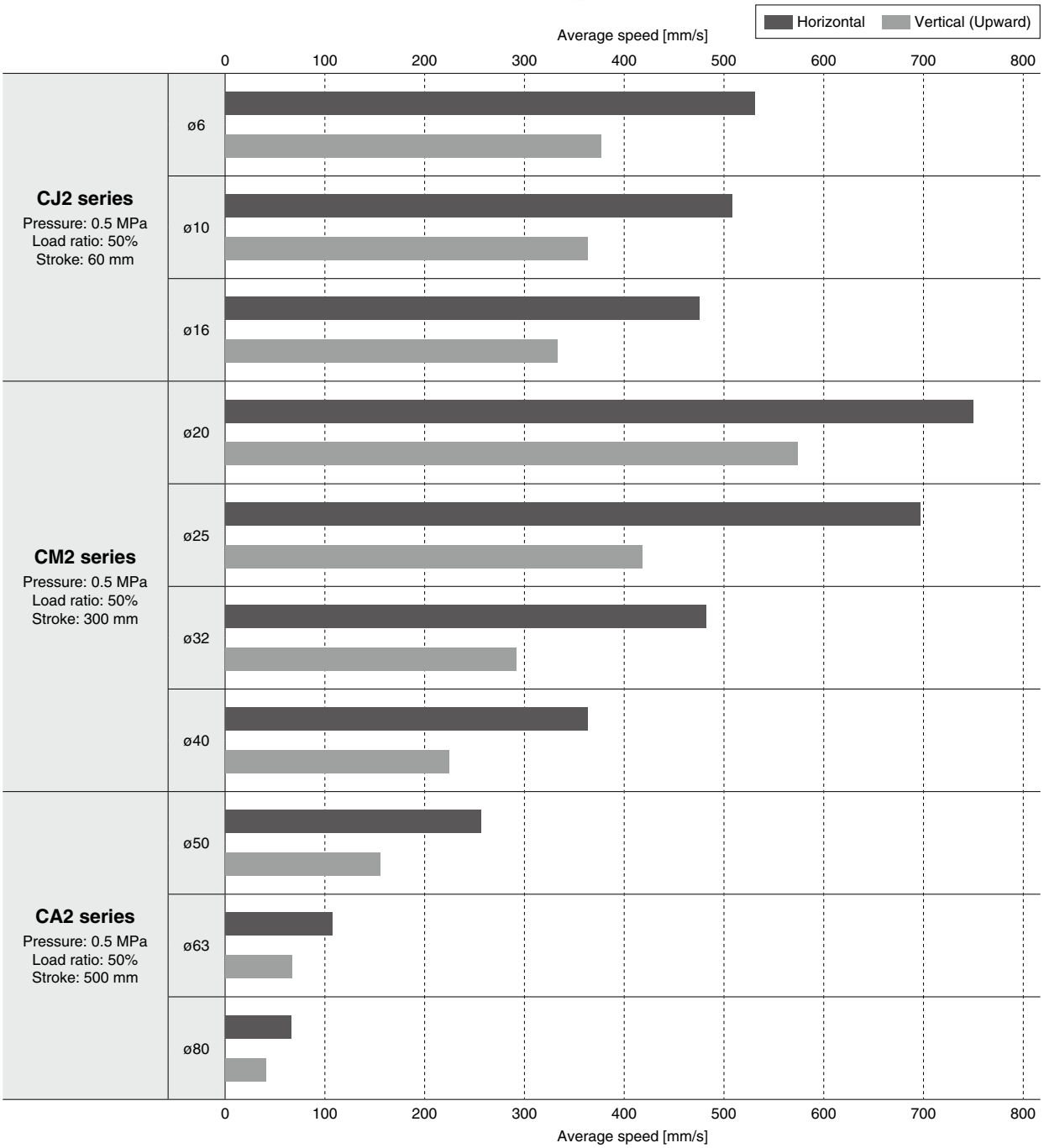

∗ Values at extension of a directly coupled cylinder when meter-out speed controllers are used with the needle full open.
∗ The average speed of the cylinder is obtained by dividing the stroke by the total stroke time.
∗ Formula for load ratio: Load ratio = ((Load mass x 9.8)/Theoretical output) x 100%
∗ Cylinder for horizontal use are based on the coefficient of rolling friction 0.1.
∗ Operating piston speed is different depending on the applicable cylinder. Refer to the cylinder catalog for details.

Optimum Actuation Size Chart of Air Cylinder

For JSY1000, A, B port: ø6

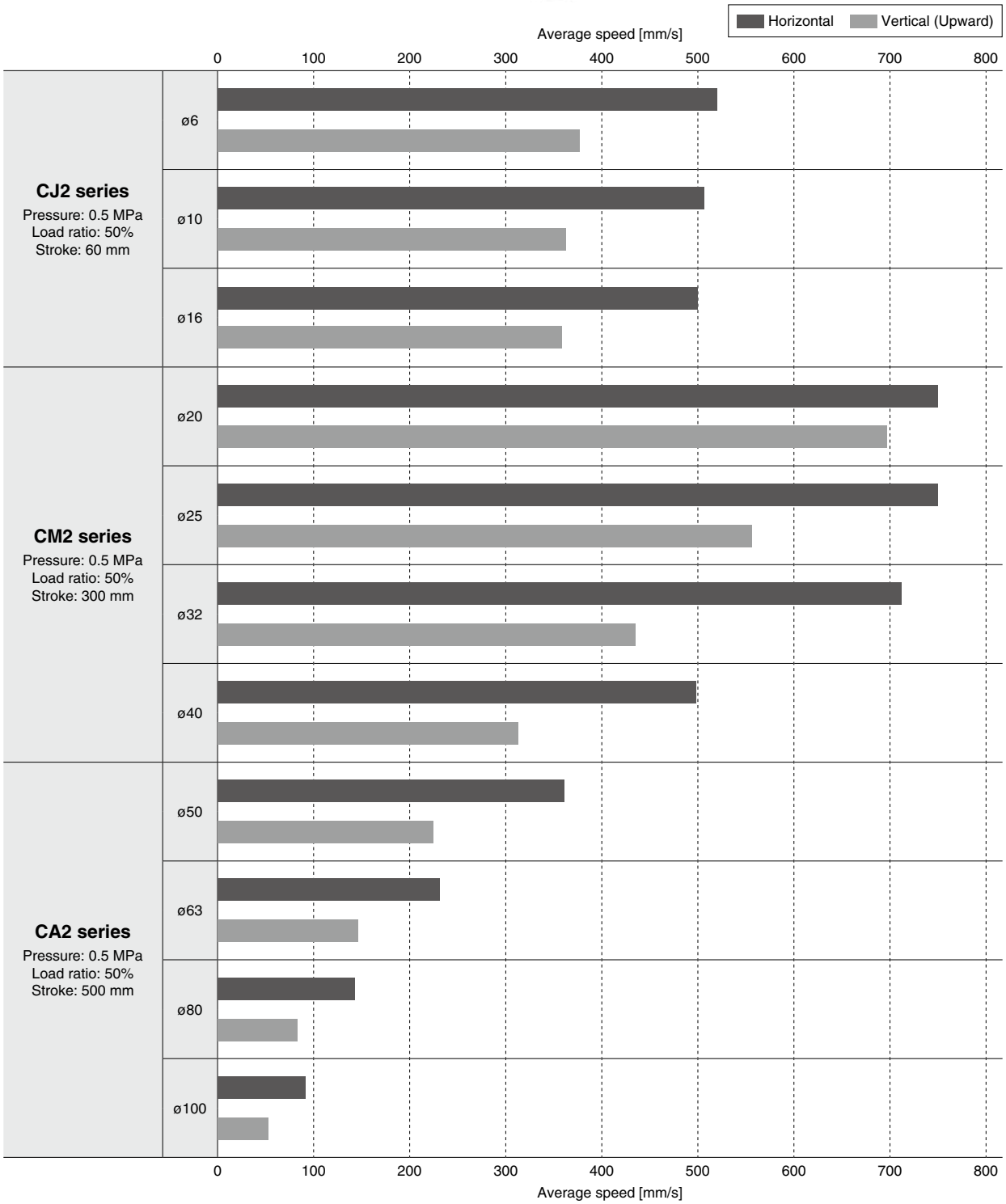

* Values at extension of a directly coupled cylinder when meter-out speed controllers are used with the needle full open.
* The average speed of the cylinder is obtained by dividing the stroke by the total stroke time.
* Formula for load ratio: Load ratio = ((Load mass x 9.8)/Theoretical output) x 100%
* Cylinder for horizontal use are based on the coefficient of rolling friction 0.1.
* Operating piston speed is different depending on the applicable cylinder. Refer to the cylinder catalog for details.

Optimum Actuation Size Chart of Air Cylinder

For JSY3000, A, B port: ø8

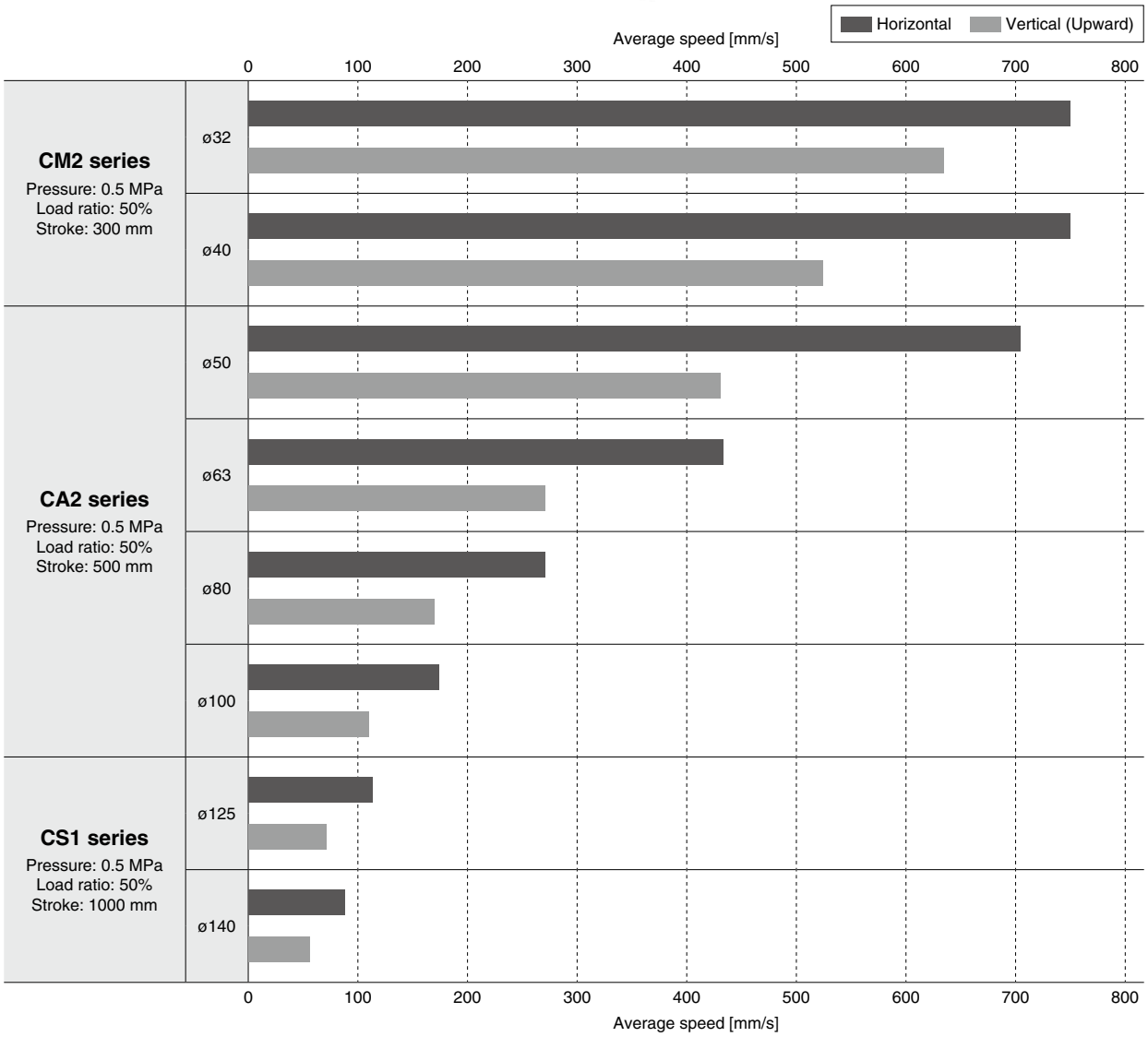

* Values at extension of a directly coupled cylinder when meter-out speed controllers are used with the needle full open.
* The average speed of the cylinder is obtained by dividing the stroke by the total stroke time.
* Formula for load ratio: Load ratio = ((Load mass x 9.8)/Theoretical output) x 100%
* Cylinder for horizontal use are based on the coefficient of rolling friction 0.1.
* Operating piston speed is different depending on the applicable cylinder. Refer to the cylinder catalog for details.

Optimum Actuation Size Chart of Air Cylinder

For JSY5000, A, B port: ø12

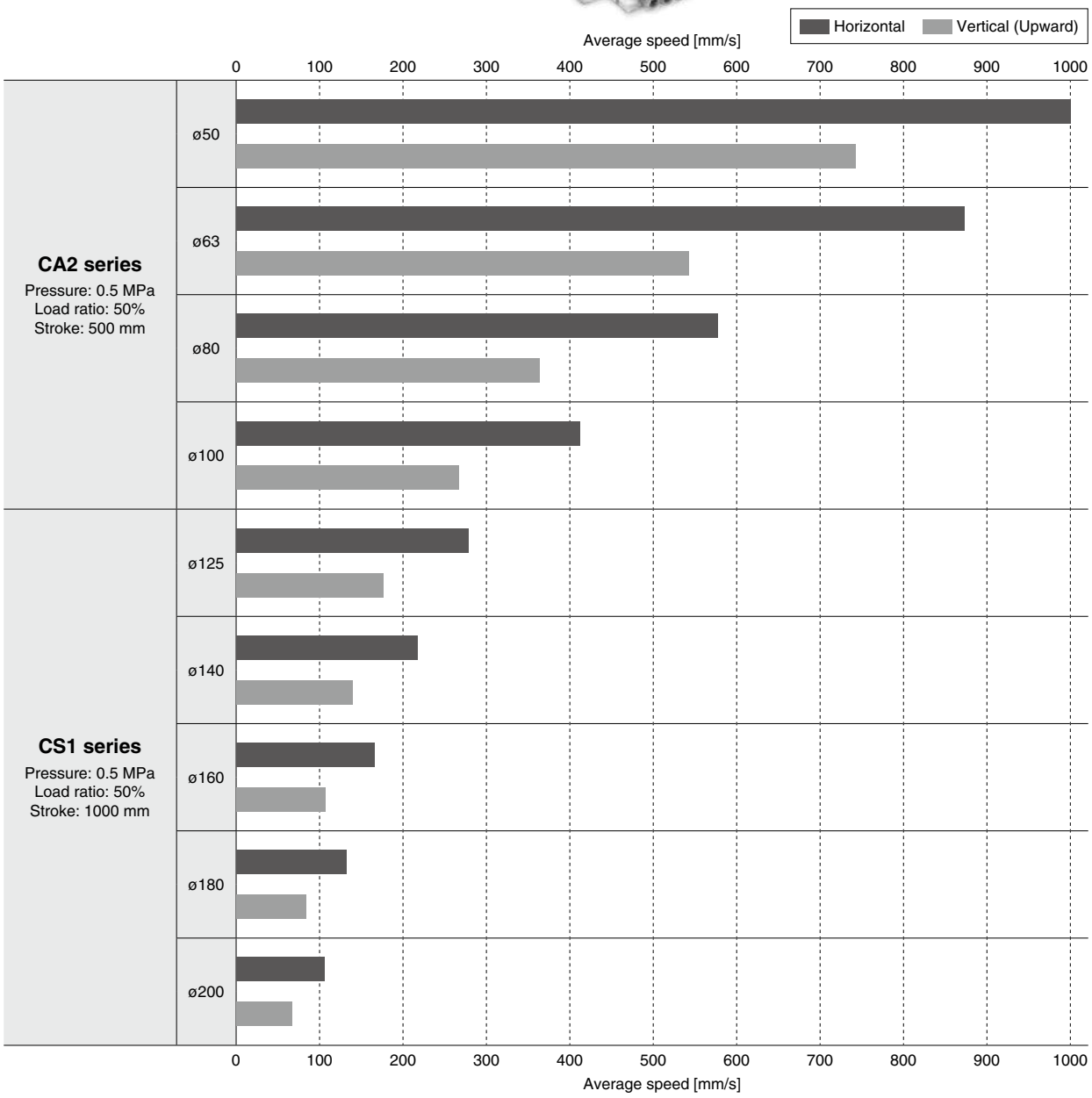

∗ Values at extension of a directly coupled cylinder when meter-out speed controllers are used with the needle full open.
∗ The average speed of the cylinder is obtained by dividing the stroke by the total stroke time.
∗ Formula for load ratio: Load ratio = ((Load mass x 9.8)/Theoretical output) x 100%
∗ Cylinder for horizontal use are based on the coefficient of rolling friction 0.1.
∗ Operating piston speed is different depending on the applicable cylinder. Refer to the cylinder catalog for details.

JSY1000/3000/5000 Series
Valve Specifications

Valve Specifications

Valve type			Rubber seal
Fluid			Air
Internal pilot operating pressure range [MPa]	**2-position single**		0.15 to 0.7
	2-position double		0.1 to 0.7
	3-position		0.2 to 0.7
	4-position dual 3-port valve		0.15 to 0.7
External pilot (Made to Order) operating pressure range [MPa]	**Operating pressure range**		–100 kPa to 0.7
	Pilot pressure range	**2-position single**	0.25 to 0.7
		2-position double	
		3-position	
Ambient and fluid temperatures [°C]			–10 to 50 (No freezing)
Max. operating frequency [Hz]	**JSY1000/3000**	**2-position single/double**	5
		4-position dual 3-port valve	
		3-position	3
	JSY5000	**2-position single/double**	5
		4-position dual 3-port valve	3
		3-position	3
Manual override			Non-locking push type
			Push-turn locking slotted type
			Push-turn locking lever type*1
Pilot exhaust type	**Internal pilot**		Individual exhaust
	External pilot (Made to Order)		
Lubrication			Not required
Mounting orientation*2			Unrestricted
Impact/Vibration resistance*2 [m/s²]			150/30
Enclosure			JSY1000: IP40 JSY3000/5000: IP67 (Based on IEC60529)
Coil rated voltage [DC]			24 V
Allowable voltage fluctuation [V]			±10% of the rated voltage
Power consumption [W]	**Standard**	**JSY3000/5000**	0.4
	With power saving circuit	**JSY1000**	0.2*3 [Inrush 0.5, Holding 0.2]
		JSY3000/5000 (Made to Order)	0.1*4 [Inrush 0.4, Holding 0.1]
Surge voltage suppressor			Diode (Varistor for non-polar type)
Indicator light			LED

*1 Not available for the JSY1000 series
*2 Impact resistance: No malfunction occurred when it is tested in the axial direction and at the right angles to the main valve and armature in both energized and de-energized states every once for each condition. (Values at the initial period)
Vibration resistance: No malfunction occurred in a one-sweep test between 45 and 2000 Hz. Test was performed at both energized and de-energized states in the axial direction and at the right angles to the main valve and armature. (Values at the initial period)
Refer to page 118 for the fixation of DIN rail mounting type manifold.
*3 JSY1000 series available as power saving type only. Standard type (without power saving circuit) cannot be selected.
*4 For details, refer to page 116.

Response Time

Series	Model	Type of actuation	Response time [ms]*1 With light/surge voltage suppressor	
			Z type	U type
JSY1000	**JSY1100**	2-position single	15	—
	JSY1200	2-position double	7	
	JSY13/4/500	3-position	16	
	JSY1A/B/C00	4-position dual 3-port valve	19	
JSY3000	**JSY3100**	2-position single	27	18
	JSY3200	2-position double	13	12
	JSY33/4/500	3-position	27	24
	JSY3A/B/C00	4-position dual 3-port valve	23	23
JSY5000	**JSY5100**	2-position single	35	25
	JSY5200	2-position double	19	17
	JSY53/4/500	3-position	41	37
	JSY5A/B/C00	4-position dual 3-port valve	37	37

*1 Based on dynamic performance test, JIS B 8419-2010. (Coil temperature: 20°C, at rated voltage)

Valve Weight

JSY1000 Series

Valve model	Type of actuation		Weight [g]
JSY1□00	2-position	Single	24
		Double	27
	3-position	Closed center	30
		Exhaust center	
		Pressure center	
	4-position	Dual 3-port valve	27

JSY3000 Series

Valve model	Type of actuation		Weight [g]
JSY3□00	2-position	Single	54
		Double	63
	3-position	Closed center	67
		Exhaust center	
		Pressure center	
	4-position	Dual 3-port valve	63

JSY5000 Series

Valve model	Type of actuation		Weight [g]
JSY5□00	2-position	Single	91
		Double	100
	3-position	Closed center	110
		Exhaust center	
		Pressure center	
	4-position	Dual 3-port valve	96

Valve Construction

Rubber Seal

2-position single

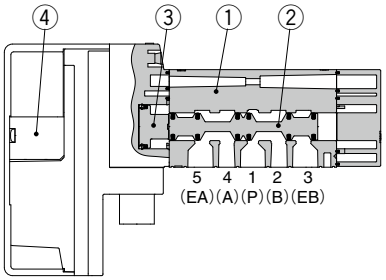

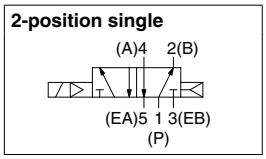

2-position double

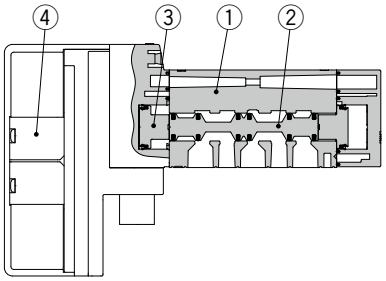

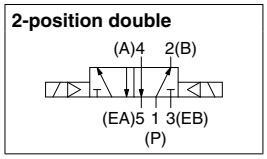

3-position closed center/exhaust center/pressure center

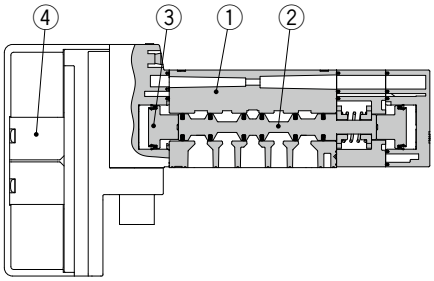

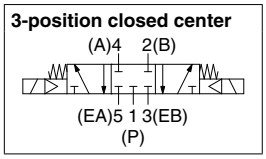

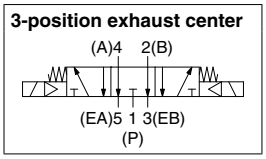

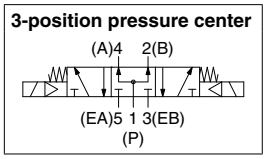

4-position dual 3-port valve

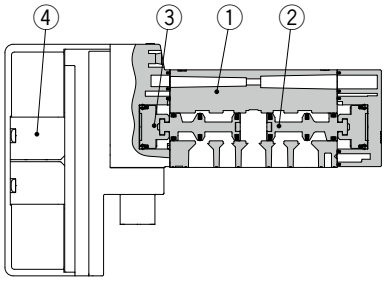

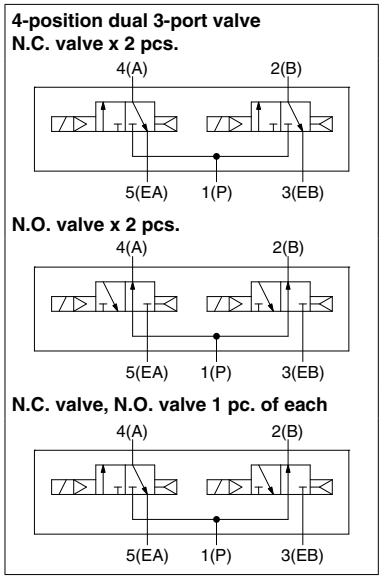

Component Parts

No.	Description	Material
1	**Body**	Aluminum die-casted
2	**Spool valve**	Aluminum/HNBR (4-position solenoid valve: Resin/HNBR)
3	**Piston**	Resin
4	**Pilot valve assembly**	—

Valve Replacement Parts: Pilot Valve

How to Order Pilot Valves (With a gasket and two mounting screws)*3

V112 □ – 5 A

Coil type

Nil	Standard
T	With power saving circuit (Made to Order)

Rated voltage

5	24 VDC

⚠ Caution

1. The coil specification and voltage (including light/surge voltage suppressor) cannot be changed by changing the pilot valve assembly.
2. When selecting the standard coil type, it is not possible to change to the power saving circuit type.
3. Replacement pilot valve for the JSY3000/5000

How to replace pilot valves

Pilot cover

Series	Part no.
JSY3000	SY30V-25AS
JSY5000	SY50V-25A

∗ Pilot cover x 1 + B tight flat head screw x 1

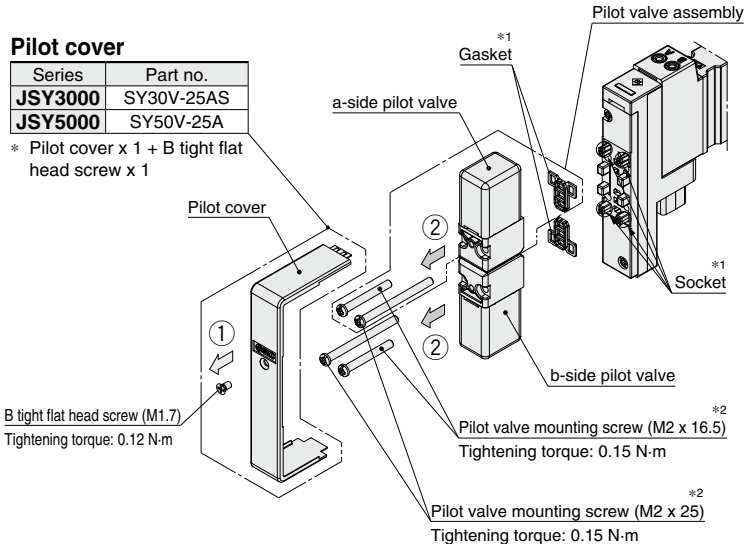

- Loosen B tight flat head screw to remove the pilot cover in the direction indicated by the arrow ①.
- Remove the pilot valve mounting screws.
- Remove the pilot valve in the direction indicated by the arrow ②.

∗ Assemble by following the removal procedure in reverse.

∗1 Ensure the gasket is mounted, and take care not to bend the socket.
∗2 Be noted for mounting that there are two types of lengths for the pilot valve mounting screws.
∗3 **The pilot valve of the JSY1000 cannot be removed. This is irreplaceable.**

Manifold Specifications

Model			D-sub connector			Flat ribbon cable						
			F type	FW type*1	FC type*2	P type	PG type	PH type	PC type*2	PGC type*2	PHC type*2	
Manifold type			Plug-in connector connecting base									
SUP/EXH port type			Common SUP/EXH (Common for 3/5 port)									
Valve stations			2 to 24 stations				2 to 18 stations	2 to 8 stations	2 to 24 stations	2 to 18 stations	2 to 8 stations	
Applicable connector			D-sub connector conforming to MIL-C-24308 (Refer to page 37.)	Dedicated connector (Refer to page 37.)	D-sub connector conforming to MIL-C-24308 (Refer to page 37.)	Flat ribbon cable connector conforming to MIL-C-83503 (Refer to page 39.)						
						Socket: 26 pins MIL type	Socket: 20 pins MIL type	Socket: 10 pins MIL type	Socket: 26 pins MIL type	Socket: 20 pins MIL type	Socket: 10 pins MIL type	
Internal wiring			Positive common, Negative common									
Port size	**1(P), 3/5(E) port**	**JSY1000**	ø8 One-touch fitting									
		JSY3000	ø10 One-touch fitting									
		JSY5000	ø12 One-touch fitting									
	4(A), 2(B) port	**JSY1000**	ø2 One-touch fitting, ø4 One-touch fitting, ø6 One-touch fitting									
		JSY3000	ø6 One-touch fitting, ø8 One-touch fitting									
		JSY5000	ø10 One-touch fitting, ø12 One-touch fitting									
Enclosure (Based on IEC60529)		**JSY1000**	IP40	—	IP20	IP40			IP20			
		JSY3000		IP67								
		JSY5000			—				—			

*1 FW type is not available for JSY1000. Protection class for the JSY1000 is IP20 or IP40.
*2 FC, PC, PGC, PHC types are not available for the JSY5000.

Manifold Weight

Unit: g

Model		① Per station	② Wiring									
			D-sub connector			Flat ribbon cable						
			F type	FW type*2	FC type*3	P type	PG type	PH type	PC type*3	PGC type*3	PHC type*3	
JSY1000	**for ø4**	21.3	308	—	233	306	304	298	233	231	225	
	for ø6	26.9	319	—	244	317	315	309	244	242	236	
JSY3000 for ø8		42.7	332	330	287	330	328	322	257	255	249	
JSY5000 for ø12		104	509	507	—	507	505	499	—	—	—	

Formula for manifold weight*1

W = ① x n + ② (n: stations)

JSY3000 series, D-sub connector, F type, 5 stations: (42.7 x 5) + 332 = 545.5 (g)

Manifold Flow Rate Characteristics

Model	Port size		Valve flow rate characteristics			
	1, 3/5 (P, E)	4, 2 (A, B)	1 → 4/2 (P → A/B)		4/2 → 3/5 (A/B → E)	
			C [dm³/(s·bar)]	b	C [dm³/(s·bar)]	b
JJ5SY1-10 (Side ported)	C8	C4	0.63	0.46	0.87	0.47
		C6	0.96	0.30	0.91	0.48
JJ5SY3-10 (Side ported)	C10	C8	2.23	0.30	2.77	0.27
JJ5SY5-10 (Side ported)	C12	C12	6.40	0.22	6.59	0.22

* Calculation of effective area S and sonic conductance C: S = 5.0 x C
* Values measured in accordance with ISO 6358:1989, JIS B 8390:2000

	Terminal block box		Lead wire	Serial wiring			
	T type	TC type	L type	S6□ type (EX600)	S□ type (EX250)	S□ type (EX260)	S3□ type (EX120)
	Plug-in connector connecting base						
	Common SUP/EXH (Common for 3/5 port)						
	2 to 20 stations	2 to 24 stations					2 to 16 stations
	—						
	Positive common, Negative common						
	ø8 One-touch fitting						
	ø10 One-touch fitting						
	ø12 One-touch fitting						
	ø2 One-touch fitting, ø4 One-touch fitting, ø6 One-touch fitting						
	ø6 One-touch fitting, ø8 One-touch fitting						
	ø10 One-touch fitting, ø12 One-touch fitting						
	IP40						IP20
	IP67			IP67 (I/O unit: partially IP40)	IP67	IP67 (D-sub communication connector: IP40)	

Unit: g

	② Wiring								
	Terminal block box		Lead wire			Serial wiring			
	T type	TC type	L type (0.6 m)	L type (1.5 m)	L type (3 m)	S6□ type (EX600)*4	S□ type (EX250)*4	S□ type (EX260)	S3□ type (EX120)
	680	471	404	514	698	829	520	448	367
	689	480	413	523	707	838	529	457	367
	709	500	433	543	727	858	549	477	391
	914	705	638	748	932	1063	754	682	568

*1 Weight: W is the value of the internal pilot, and maximum manifold size with tube fitting type. Valve is not included. To obtain the weight with valves attached, add the valve weights given on page 12 for the appropriate number of stations.
*2 FW type is not available for the JSY1000.
*3 FC, PC, PGC, PHC types are not available for the JSY5000.
*4 Serial unit weight is included, but I/O unit is not included. Add the weight for calculation when I/O unit is added.

Connector Wiring Layout

For both serial and parallel wiring, additional valves are sequentially assigned pins on the connector.
This makes it completely unnecessary to disassemble the connector unit.

■ Single solenoid valve is installed to all double wiring. (in the case of all double wiring) (Manifold specification sheet is not necessary.)

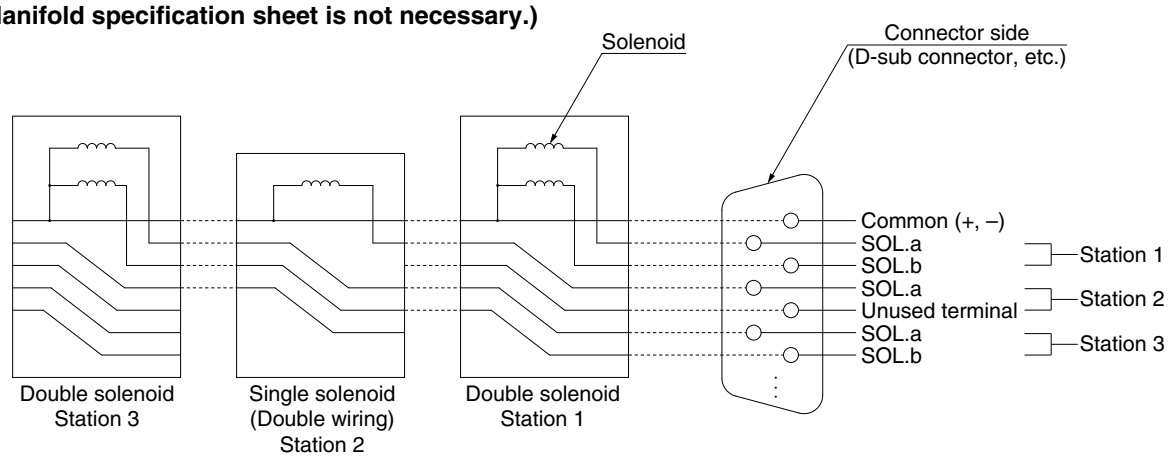

■ Single/double wiring are mixed. (Manifold specification sheet is necessary.)

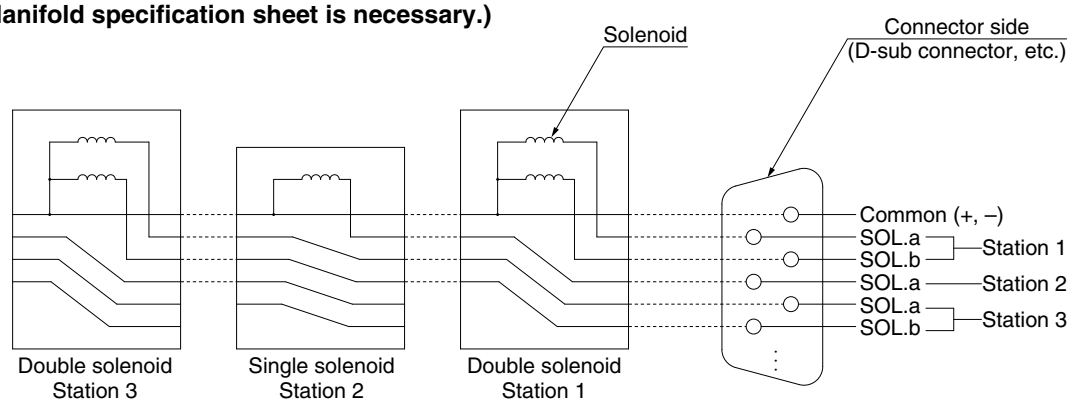

∗ These diagrams are for the purpose of explanation, and differ from the actual connector wiring.

Plug-in Connector Connecting Base

D-sub Connector **Flat Ribbon Cable**

Type 10 Side Ported

JSY1000/3000/5000 Series

CE RoHS

Internal Pilot

How to Order Manifolds

JJ5SY 3 – 10 F 1 – 05 D □ – C6 □

❶ ❷ ❸ ❹ ❺ ❻ ❼ ❽ ❾

Made to Order
(Refer to page 114 for details.)

Specification
External pilot (SUP/EXH block assembly)

❶ Series

1	JSY1000
3	JSY3000
5	JSY5000

❷ Type

10	Side ported

❸ Connector type

F: D-sub connector <IP40> (25 pins) — Connector entry direction adjustable

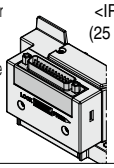

FW: D-sub connector∗1 <IP67> (25 pins)

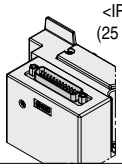

FC: D-sub connector∗2 Compact type <IP20> (25 pins)

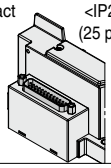

P: Flat ribbon cable <IP40> (26 pins) — Connector entry direction adjustable

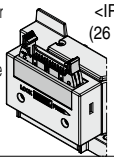

PG: Flat ribbon cable <IP40> (20 pins) — Connector entry direction adjustable

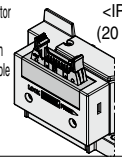

PH: Flat ribbon cable <IP40> (10 pins) — Connector entry direction adjustable

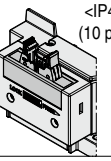

PC: Flat ribbon cable∗2 Compact type <IP20> (26 pins)

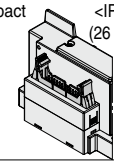

PGC: Flat ribbon cable∗2 Compact type <IP20> (20 pins)

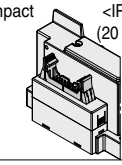

PHC: Flat ribbon cable∗2 Compact type <IP20> (10 pins)

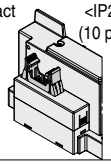

∗1 FW is not available for the JSY1000.
∗2 Compact type is not available for the JSY5000.

❹ Connector entry direction

1: Upward	2: Lateral
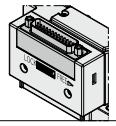	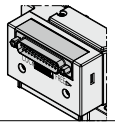

∗ The connector entry direction for connector types "FW," "FC," and "P□C" cannot be rotated. If it is necessary to change, order connector block assembly and SUP/EXH block assembly (pages 96 and 97) separately.

❺ Valve stations

F/FW/FC: D-sub connector (25 pins)

Symbol	Stations	Note
02	2 stations	Double wiring∗1
⋮	⋮	
12	12 stations	
02	2 stations	Specified layout∗2 (Up to 24 solenoids available)
⋮	⋮	
24	24 stations	

P/PC: Flat ribbon cable (26 pins)

Symbol	Stations	Note
02	2 stations	Double wiring∗1
⋮	⋮	
12	12 stations	
02	2 stations	Specified layout∗2 (Up to 24 solenoids available)
⋮	⋮	
24	24 stations	

PG/PGC: Flat ribbon cable (20 pins)

Symbol	Stations	Note
02	2 stations	Double wiring∗1
⋮	⋮	
09	9 stations	
02	2 stations	Specified layout∗2 (Up to 18 solenoids available)
⋮	⋮	
18	18 stations	

PH/PHC: Flat ribbon cable (10 pins)

Symbol	Stations	Note
02	2 stations	Double wiring∗1
⋮	⋮	
04	4 stations	
02	2 stations	Specified layout∗2 (Up to 8 solenoids available)
⋮	⋮	
08	8 stations	

∗1 Double wiring: 2-position single, double, 3-position, and 4-position valves can be used on all manifold stations.
Use of a 2-position single solenoid will result in an unused control signal. If this is not desired, order with a specified layout.
∗2 Specified layout: Indicate the wiring specifications on the manifold specification sheet. (Note that 2-position double, 3-position, and 4-position valves cannot be used where single wiring has been specified.)
∗ This also includes the number of blanking plates.

❻ P, E port entry

U	U side (2 to 10 stations)
D	D side (2 to 10 stations)
B	Both sides (2 to 24 stations)

❼ SUP/EXH block assembly

Nil	Internal pilot
S	Internal pilot, Built-in silencer

∗ 3/5(E) port is plugged for the built-in silencer type.
∗ The external pilot specification should be ordered as Made to Order. For details, refer to page 114.

❽ A, B port size (Metric/One-touch fitting)

Symbol		A, B port	JSY1000	JSY3000	JSY5000
C2	Straight	ø2	●	—	—
C4	Straight	ø4	●	—	—
C6	Straight	ø6	●	●	—
C8	Straight	ø8	—	●	—
C10	Straight	ø10	—	—	●
C12	Straight	ø12	—	—	●
CM∗1		Straight port, mixed sizes	●	●	●
P, E port size (One-touch fittings)			ø8	ø10	ø12

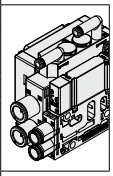

∗1 Indicate the sizes on the manifold specification sheet in the case of "CM."
∗ The JSY1000 manifold pitch for C2 and C4 is 6.5 mm, and 9 mm for C6. When CM is selected, the manifold pitch is different depending on the selected fitting.

❾ Mounting and Option

Symbol	Mounting
Nil	Direct mounting
D□	DIN rail mounting

DIN Rail Option

Nil	DIN rail mounting (With DIN rail)	
0	DIN rail mounting (Without DIN rail)	
3	For 3 stations	Specify a longer rail than the standard length.
⋮	⋮	
24	For 24 stations	

∗ Enter the number of stations inside □ when it is larger than the number of valve stations. (Refer to "DIN Rail Option" shown on the left.)
∗ Refer to page 118 for the fixation of DIN rail mounting type manifold.

How to Order Manifold Assembly

Example (JJ5SY3-10F1-□)

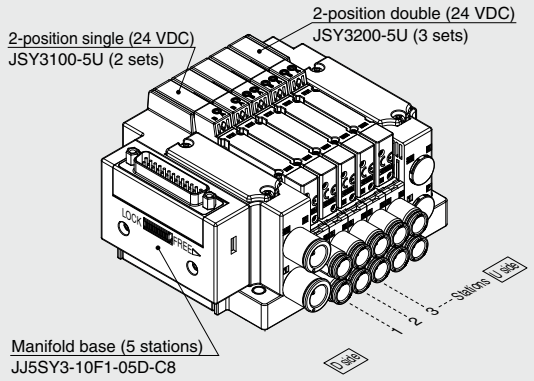

JJ5SY3-10F1-05D-C8 ··· 1 set (Type 10 5-station manifold base part no.)
∗ JSY3100-5U ····· 2 sets (2-position single part no.)
∗ JSY3200-5U ····· 3 sets (2-position double part no.)
→ The asterisk denotes the symbol for the assembly. Prefix it to the part numbers of the valve, etc.

- The valve arrangement is numbered as the 1st station from the D side.
- Under the manifold part number, state the valves to be mounted in order from the 1st station as shown in the figure. If the arrangement becomes complicated, specify on a manifold specification sheet.

Internal Pilot

How to Order Valves (With mounting screw)

Refer to page 11 for valve specifications.

JSY1000 Series JSY 1 1 0 0 T – 5 Z □

JSY3000/5000 Series JSY 3 1 0 0 – 5 Z □

❶ ❷ ❸ ❹ ❺ ❻

● With power saving circuit

● Base mounted

Made to Order (Refer to page 114 for details.)

Specification
With power saving circuit (Continuous duty type): 0.1 W (JSY3000/5000)
External pilot

❶ Series

1	JSY1000
3	JSY3000
5	JSY5000

❸ Pilot valve exhaust method

0	Pilot valve individual exhaust

❹ Rated voltage

5	24 VDC

⚠ Caution

If the JSY3000/5000 series will be continuously energized, please be sure to use the power saving circuit (continuous duty type). Refer to Made to Order on page 114. Additionally, when it is used at the energizing rate over 50%, please select the product with power saving circuit.
For the JSY1000 series only the power saving circuit is available.

❷ Type of actuation

1	2-position	Single
2		Double
3	3-position	Closed center
4		Exhaust center
5		Pressure center
A	4-position dual 3-port	N.C./N.C.
B		N.O./N.O.
C		N.C./N.O.

❺ Light/surge voltage suppressor and common specification

Symbol	With light	Surge voltage suppressor	Common specification
U	●	●	Non-polar
Z			Positive common
NZ			Negative common

∗ Only "Z" and "NZ" types are available for the JSY1000 series.
∗ When non-polar common specification type is selected, take measures to prevent surge voltage. For details, refer to page 117.

❻ Manual override

Nil: Non-locking push type

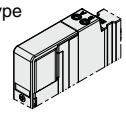

D: Push-turn locking slotted type

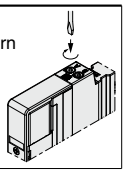

E: Push-turn locking lever type

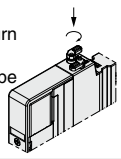

∗ Push-turn locking lever type "E" is not available for the JSY1000.

∗ **When ordering a valve individually, the base gasket is not included.**
Since the base gasket is attached to the manifold, please order the base gasket separately if it is needed for maintenance service.
Refer to page 107 for base gasket and mounting screw part numbers.

⚠ Protective class class Ⅲ (Mark: ⟨Ⅲ⟩)

Dimensions: JSY1000 Series

Type 10/Side Ported (Applicable to ø2 and ø4 fittings)
D-sub Connector (IP40/Connector Entry Direction Adjustable)

JJ5SY1-10F$^{1}_{2}$-Stations$^{U}_{D}$$^{}_{B}$-$^{C2}_{C4}$(D)

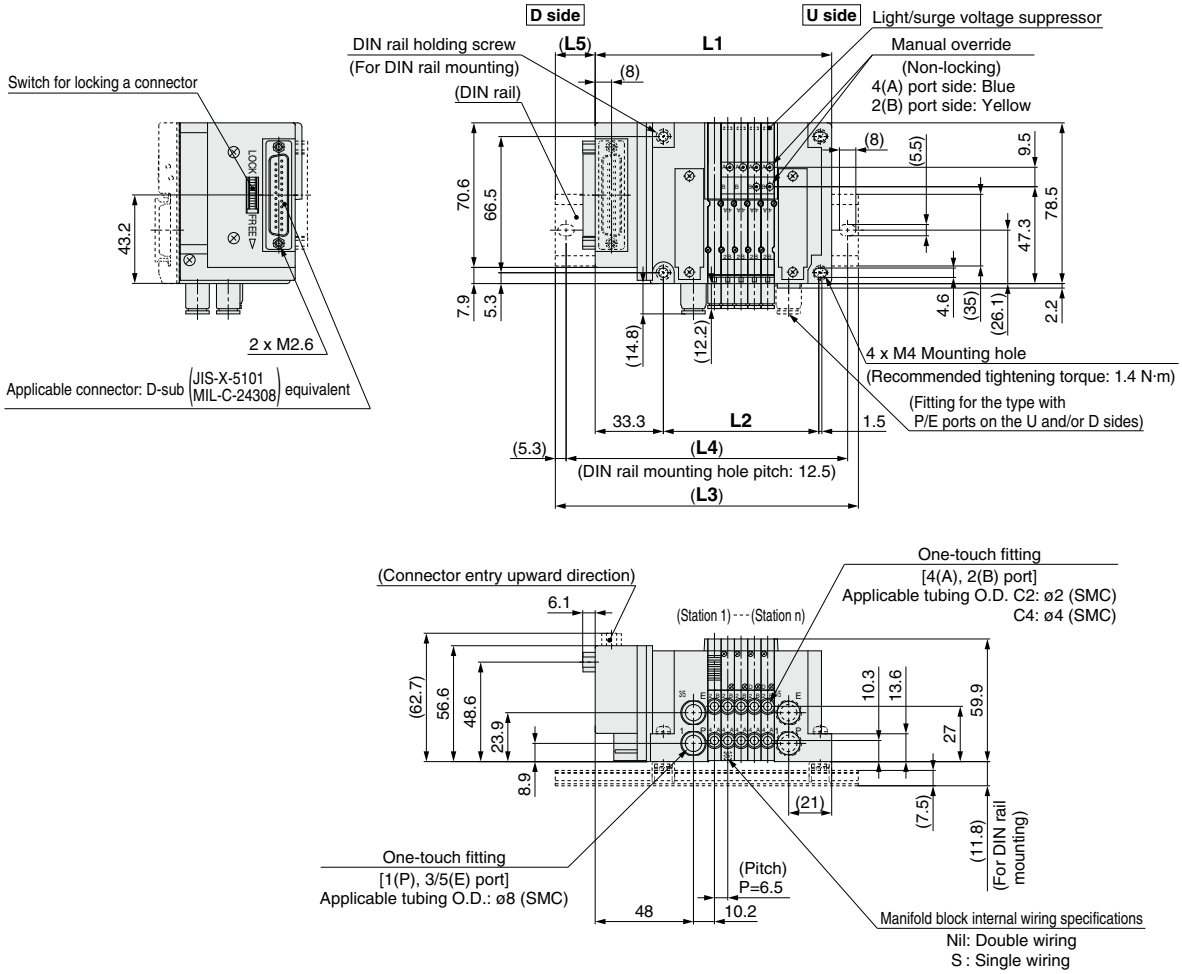

∗ These figures show the "JJ5SY1-10F2-05D-C4."
∗ Refer to page 89 for dimensions of external pilot (Made to Order) and silencer.
∗ When CM is selected for mixed A, B port size and C6 (9 mm pitch) is included, refer to page 92 for dimensions.

L: Dimensions

n: Stations

L \ n	2	3	4	5	6	7	8	9	10	11	12	13	14	15	16
L1	96	102.5	109	115.5	122	128.5	135	141.5	148	154.5	161	167.5	174	180.5	187
L2	56.4	62.9	69.4	75.9	82.4	88.9	95.4	101.9	108.4	114.9	121.4	127.9	134.4	140.9	147.4
L3	135.5	135.5	148	148	160.5	160.5	173	173	185.5	185.5	198	198	210.5	210.5	223
L4	125	125	137.5	137.5	150	150	162.5	162.5	175	175	187.5	187.5	200	200	212.5
L5	23	19.5	22.5	19.5	22.5	19	22	19	22	18.5	21.5	18.5	21.5	18	21

L \ n	17	18	19	20	21	22	23	24
L1	193.5	200	206.5	213	219.5	226	232.5	239
L2	153.9	160.4	166.9	173.4	179.9	186.4	192.9	199.4
L3	223	235.5	248	248	260.5	260.5	273	273
L4	212.5	225	237.5	237.5	250	250	262.5	262.5
L5	18	21	24	20.5	23.5	20.5	23.5	20

Dimensions: JSY1000 Series

Type 10/Side Ported (Applicable to ø6 fittings)
D-sub Connector (IP40/Connector Entry Direction Adjustable)

JJ5SY1-10F$^{1}_{2}$-Stations$^{U}_{D}$-C6(D)

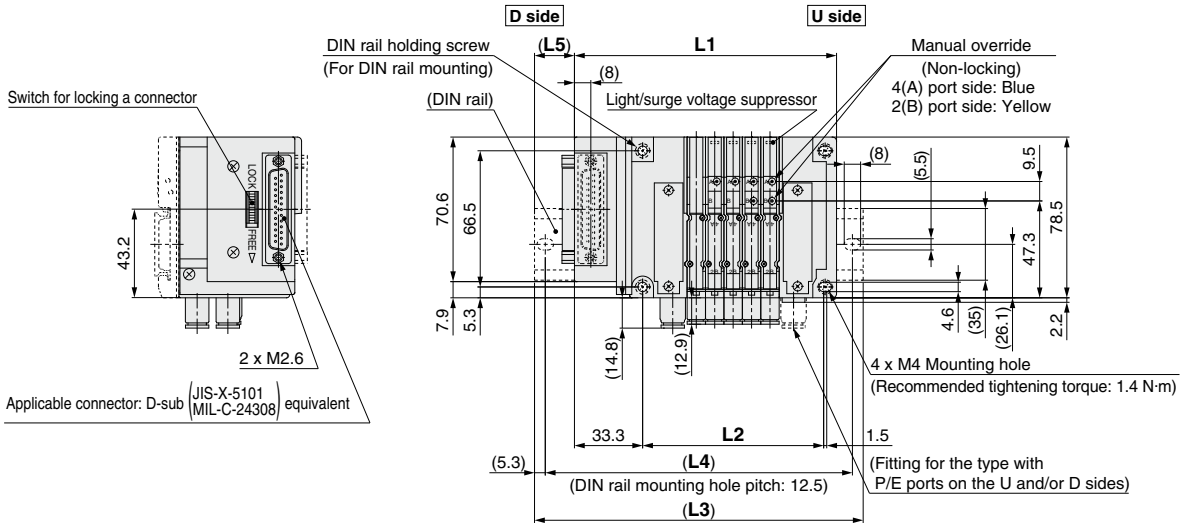

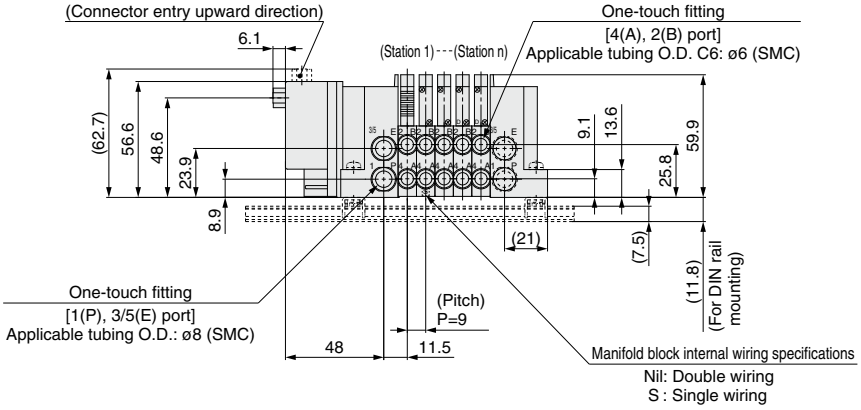

∗ These figures show the "JJ5SY1-10F2-05D-C6."
∗ Refer to page 89 for dimensions of external pilot (Made to Order) and silencer.
∗ When CM is selected for mixed A, B port size, refer to page 92 for dimensions.

L: Dimensions

n: Stations

L \ n	2	3	4	5	6	7	8	9	10	11	12	13	14	15	16
L1	101	110	119	128	137	146	155	164	173	182	191	200	209	218	227
L2	61.4	70.4	79.4	88.4	97.4	106.4	115.4	124.4	133.4	142.4	151.4	160.4	169.4	178.4	187.4
L3	135.5	148	160.5	160.5	173	185.5	185.5	198	210.5	223	223	235.5	248	248	260.5
L4	125	137.5	150	150	162.5	175	175	187.5	200	212.5	212.5	225	237.5	237.5	250
L5	20.5	22	24	19.5	21	23	18.5	20	22	23.5	19	21	22.5	18	20

L \ n	17	18	19	20	21	22	23	24
L1	236	245	254	263	272	281	290	299
L2	196.4	205.4	214.4	223.4	232.4	241.4	250.4	259.4
L3	273	285.5	285.5	298	310.5	310.5	323	335.5
L4	262.5	275	275	287.5	300	300	312.5	325
L5	21.5	23.5	19	20.5	22.5	18	19.5	21.5

Dimensions: JSY3000 Series

Type 10/Side Ported

D-sub Connector (IP40/Connector Entry Direction Adjustable)

JJ5SY3-10F$^{1}_{2}$-Stations$^{U}_{D}$-$^{C6}_{C8}$(D)

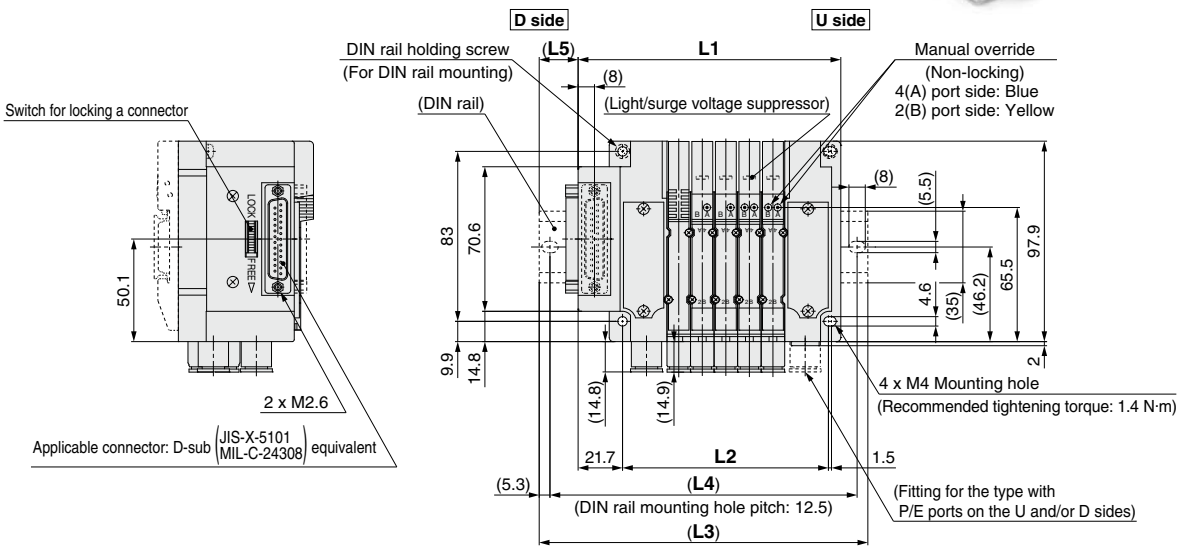

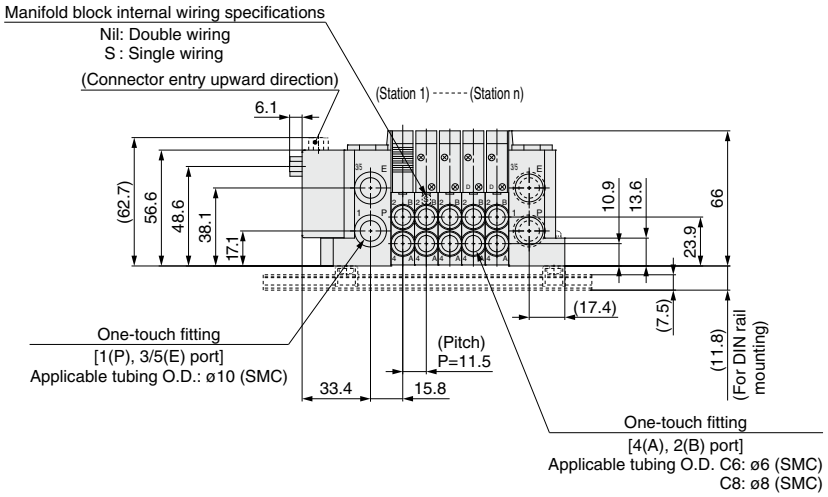

∗ These figures show the "JJ5SY3-10F2-05D-C8."
∗ Refer to page 90 for dimensions of external pilot (Made to Order) and silencer.

L: Dimensions

n: Stations

L \ n	2	3	4	5	6	7	8	9	10	11	12	13	14	15	16
L1	93.8	105.3	116.8	128.3	139.8	151.3	162.8	174.3	185.8	197.3	208.8	220.3	231.8	243.3	254.8
L2	66.1	77.6	89.1	100.6	112.1	123.6	135.1	146.6	158.1	169.6	181.1	192.6	204.1	215.6	227.1
L3	123	135.5	148	160.5	173	185.5	198	210.5	223	235.5	248	260.5	273	273	285.5
L4	112.5	125	137.5	150	162.5	175	187.5	200	212.5	225	237.5	250	262.5	262.5	275
L5	17.5	18	18.5	19	19.5	20	20.5	21	21.5	22	22.5	23	23.5	18	18.5

L \ n	17	18	19	20	21	22	23	24
L1	266.3	277.8	289.3	300.8	312.3	323.8	335.3	346.8
L2	238.6	250.1	261.6	273.1	284.6	296.1	307.6	319.1
L3	298	310.5	323	335.5	348	360.5	373	385.5
L4	287.5	300	312.5	325	337.5	350	362.5	375
L5	19	19.5	20	20.5	21	21.5	22	22.5

Dimensions: JSY5000 Series

Type 10/Side Ported

D-sub Connector (IP40/Connector Entry Direction Adjustable)

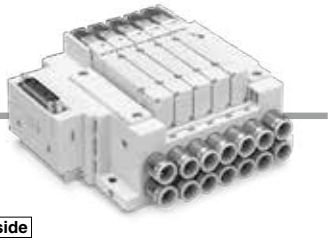

JJ5SY5-10F$^{1}_{2}$-Stations $^{U}_{D}$-$^{C10}_{C12}$(D)

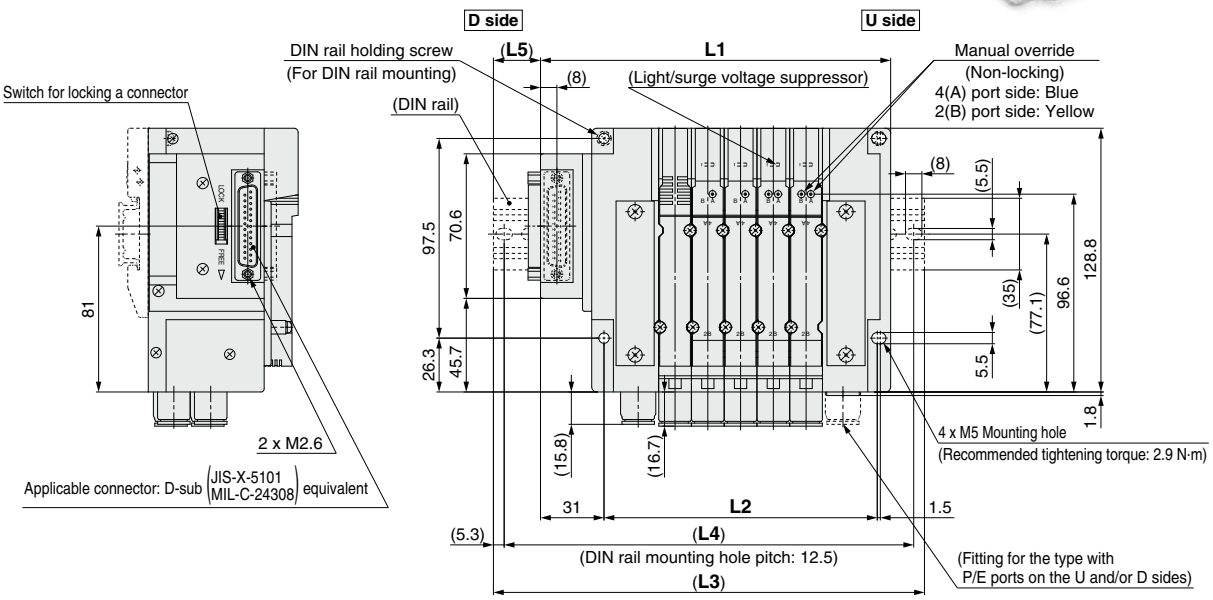

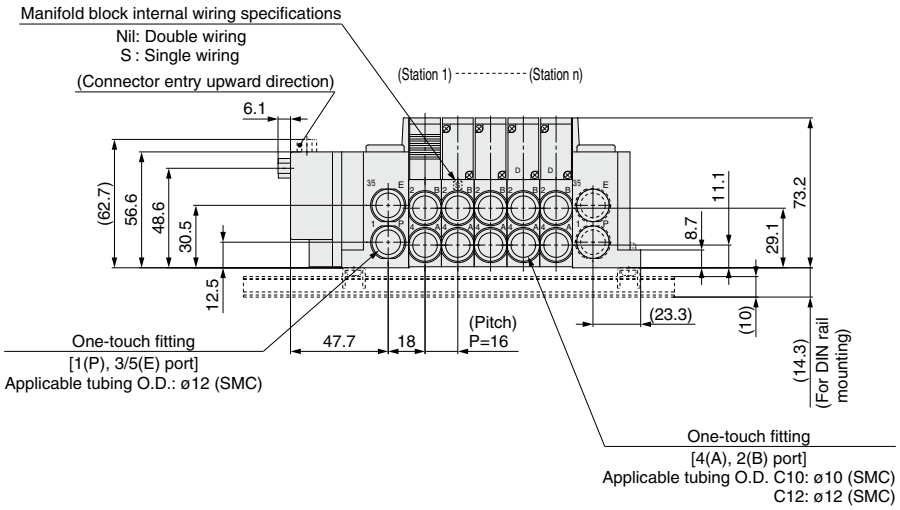

∗ These figures show the "JJ5SY5-10F2-05D-C12."
∗ Refer to page 91 for dimensions of external pilot (Made to Order) and silencer.

L: Dimensions

n: Stations

L \ n	2	3	4	5	6	7	8	9	10	11	12	13	14	15	16
L1	123	139	155	171	187	203	219	235	251	267	283	299	315	331	347
L2	85.5	101.5	117.5	133.5	149.5	165.5	181.5	197.5	213.5	229.5	245.5	261.5	277.5	293.5	309.5
L3	160.5	173	185.5	210.5	223	235.5	260.5	273	285.5	298	323	335.5	348	360.5	385.5
L4	150	162.5	175	200	212.5	225	250	262.5	275	287.5	312.5	325	337.5	350	375
L5	22	20	18.5	23	21	19.5	24	22	20.5	18.5	23	21.5	19.5	18	22.5

L \ n	17	18	19	20	21	22	23	24
L1	363	379	395	411	427	443	459	475
L2	325.5	341.5	357.5	373.5	389.5	405.5	421.5	437.5
L3	398	410.5	435.5	448	460.5	473	498	510.5
L4	387.5	400	425	437.5	450	462.5	487.5	500
L5	20.5	19	23.5	21.5	20	18	22.5	21

Dimensions: JSY3000 Series

Type 10/Side Ported
D-sub Connector (IP67)

JJ5SY3-10FW$^{1}_{2}$-Stations$^{U}_{D}$-$^{C6}_{C8}$(D)

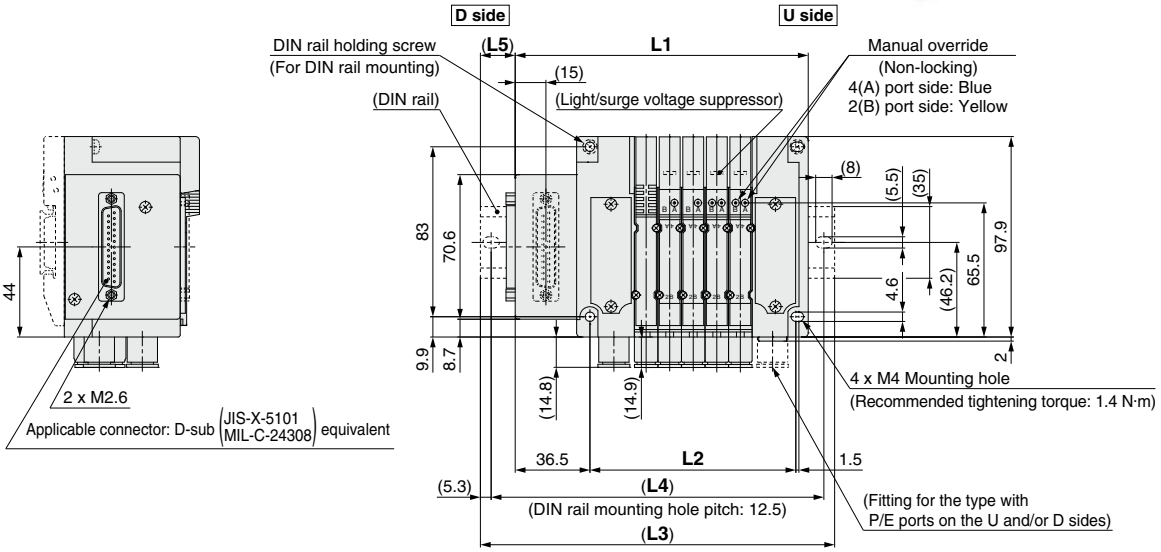

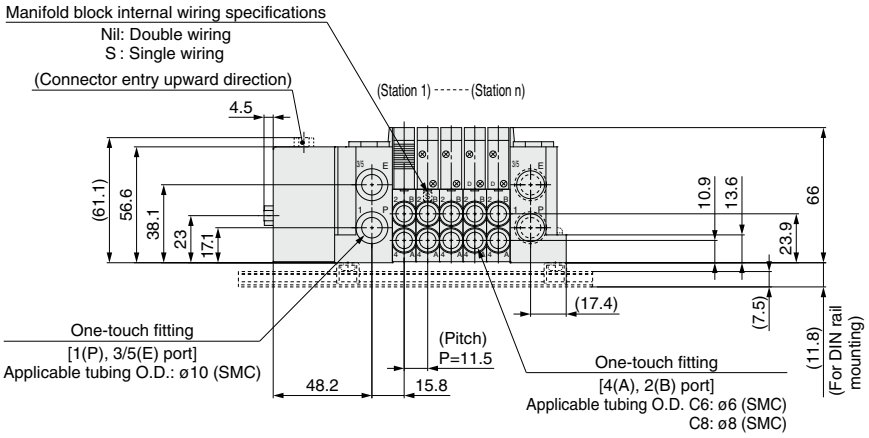

∗ These figures show the "JJ5SY3-10FW2-05D-C8."
∗ Refer to page 90 for dimensions of external pilot (Made to Order) and silencer.

L: Dimensions

n: Stations

L \ n	2	3	4	5	6	7	8	9	10	11	12	13	14	15	16
L1	108.6	120.1	131.6	143.1	154.6	166.1	177.6	189.1	200.6	212.1	223.6	235.1	246.6	258.1	269.6
L2	66.1	77.6	89.1	100.6	112.1	123.6	135.1	146.6	158.1	169.6	181.1	192.6	204.1	215.6	227.1
L3	148	148	160.5	173	185.5	198	210.5	223	235.5	248	260.5	273	285.5	298	298
L4	137.5	137.5	150	162.5	175	187.5	200	212.5	225	237.5	250	262.5	275	287.5	287.5
L5	22	16	16.5	17	17.5	18	18.5	19	19.5	20	20.5	21	21.5	22	16.5

L \ n	17	18	19	20	21	22	23	24
L1	281.1	292.6	304.1	315.6	327.1	338.6	350.1	361.6
L2	238.6	250.1	261.6	273.1	284.6	296.1	307.6	319.1
L3	310.5	323	335.5	348	360.5	373	385.5	398
L4	300	312.5	325	337.5	350	362.5	375	387.5
L5	17	17.5	18	18.5	19	19.5	20	20.5

Dimensions: JSY5000 Series

Type 10/Side Ported
D-sub Connector (IP67)

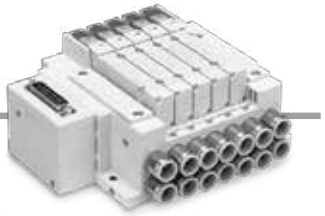

JJ5SY5-10FW$^{1}_{2}$-Stations$^{U}_{D}$-$^{C10}_{C12}$(D)

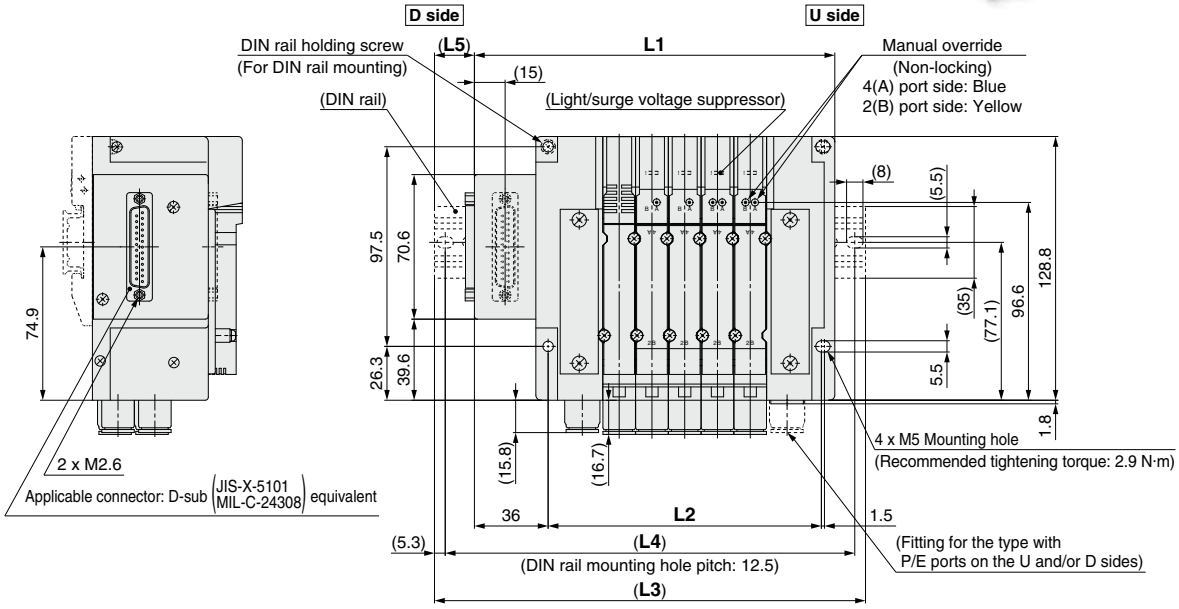

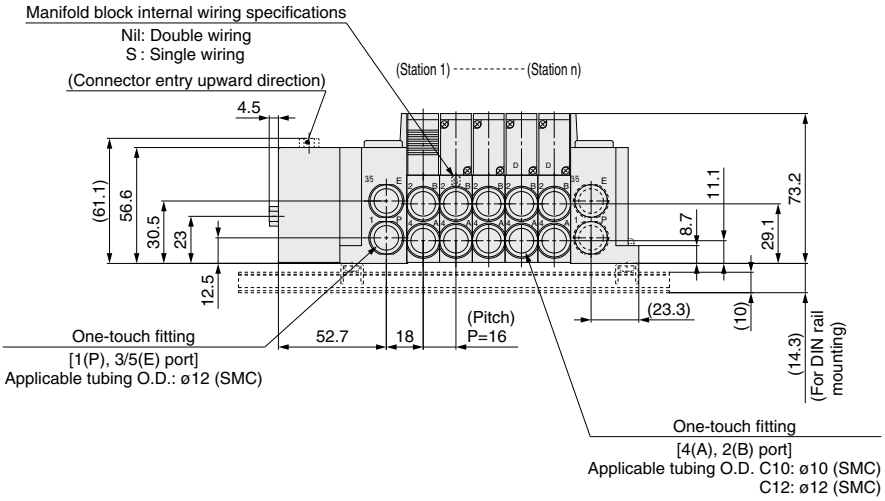

∗ These figures show the "JJ5SY5-10FW2-05D-C12."
∗ Refer to page 91 for dimensions of external pilot (Made to Order) and silencer.

L: Dimensions

n: Stations

L \ n	2	3	4	5	6	7	8	9	10	11	12	13	14	15	16
L1	128	144	160	176	192	208	224	240	256	272	288	304	320	336	352
L2	85.5	101.5	117.5	133.5	149.5	165.5	181.5	197.5	213.5	229.5	245.5	261.5	277.5	293.5	309.5
L3	160.5	173	198	210.5	223	248	260.5	273	285.5	310.5	323	335.5	348	373	385.5
L4	150	162.5	187.5	200	212.5	237.5	250	262.5	275	300	312.5	325	337.5	362.5	375
L5	18.5	17	21.5	19.5	18	22.5	20.5	19	17	21.5	20	18	16.5	21	19

L \ n	17	18	19	20	21	22	23	24
L1	368	384	400	416	432	448	464	480
L2	325.5	341.5	357.5	373.5	389.5	405.5	421.5	437.5
L3	398	423	435.5	448	460.5	485.5	498	510.5
L4	387.5	412.5	425	437.5	450	475	487.5	500
L5	17.5	22	20	18.5	16.5	21	19.5	17.5

Dimensions: JSY1000 Series

Type 10/Side Ported (Applicable to ø2 and ø4 fittings)
D-sub Connector (IP20/Compact Type)

JJ5SY1-10FC$^{1}_{2}$-Stations$^{U}_{D}$$^{}_{B}$-$^{C2}_{C4}$(D)

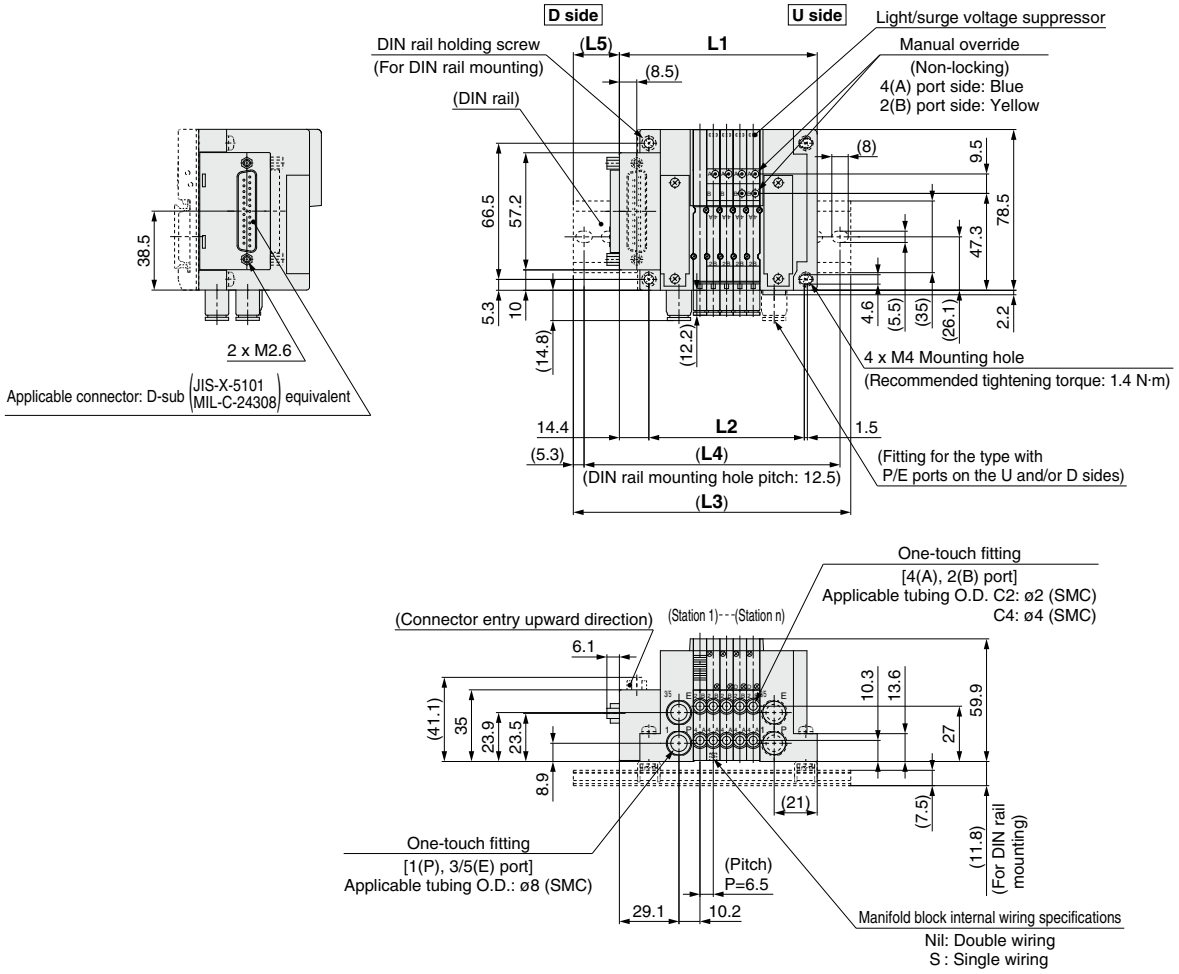

∗ These figures show the "JJ5SY1-10FC2-05D-C4."
∗ Refer to page 89 for dimensions of external pilot (Made to Order) and silencer.
∗ When CM is selected for mixed A, B port size and C6 (9 mm pitch) is included, refer to page 92 for dimensions.

L: Dimensions

n: Stations

L \ n	2	3	4	5	6	7	8	9	10	11	12	13	14	15	16
L1	77.1	83.6	90.1	96.6	103.1	109.6	116.1	122.6	129.1	135.6	142.1	148.6	155.1	161.6	168.1
L2	56.4	62.9	69.4	75.9	82.4	88.9	95.4	101.9	108.4	114.9	121.4	127.9	134.4	140.9	147.4
L3	110.5	123	123	135.5	135.5	148	148	160.5	160.5	173	173	185.5	185.5	198	198
L4	100	112.5	112.5	125	125	137.5	137.5	150	150	162.5	162.5	175	175	187.5	187.5
L5	20	23	19.5	22.5	19.5	22.5	19	22	19	22	18.5	21.5	18.5	21.5	18

L \ n	17	18	19	20	21	22	23	24
L1	174.6	181.1	187.6	194.1	200.6	207.1	213.6	220.1
L2	153.9	160.4	166.9	173.4	179.9	186.4	192.9	199.4
L3	210.5	210.5	223	235.5	235.5	248	248	260.5
L4	200	200	212.5	225	225	237.5	237.5	250
L5	21	18	21	24	20.5	23.5	20.5	23.5

Dimensions: JSY1000 Series

Type 10/Side Ported (Applicable to ø6 fittings)
D-sub Connector (IP20/Compact Type)

JJ5SY1-10FC$\frac{1}{2}$-Stations $\frac{U}{D}$-C6(D)

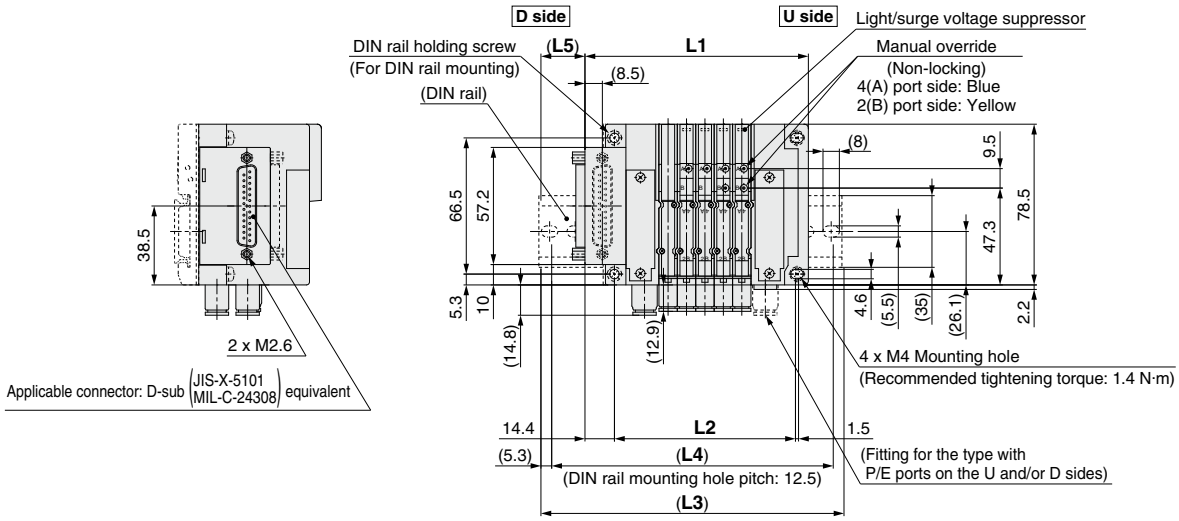

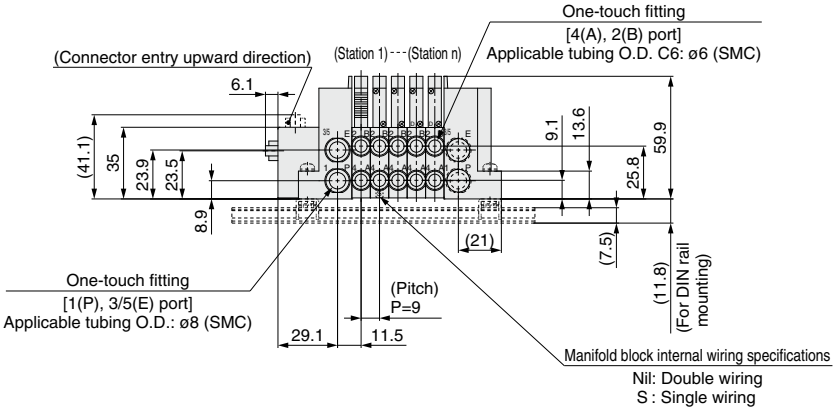

∗ These figures show the "JJ5SY1-10FC2-05D-C6."
∗ Refer to page 89 for dimensions of external pilot (Made to Order) and silencer.
∗ When CM is selected for mixed A, B port size, refer to page 92 for dimensions.

L: Dimensions

n: Stations

L \ n	2	3	4	5	6	7	8	9	10	11	12	13	14	15	16
L1	82.1	91.1	100.1	109.1	118.1	127.1	136.1	145.1	154.1	163.1	172.1	181.1	190.1	199.1	208.1
L2	61.4	70.4	79.4	88.4	97.4	106.4	115.4	124.4	133.4	142.4	151.4	160.4	169.4	178.4	187.4
L3	123	123	135.5	148	148	160.5	173	185.5	185.5	198	210.5	210.5	223	235.5	248
L4	112.5	112.5	125	137.5	137.5	150	162.5	175	175	187.5	200	200	212.5	225	237.5
L5	23.5	19	21	22.5	18	20	21.5	23.5	19	20.5	22.5	18	19.5	21.5	23

L \ n	17	18	19	20	21	22	23	24
L1	217.1	226.1	235.1	244.1	253.1	262.1	271.1	280.1
L2	196.4	205.4	214.4	223.4	232.4	241.4	250.4	259.4
L3	248	260.5	273	285.5	285.5	298	310.5	310.5
L4	237.5	250	262.5	275	275	287.5	300	300
L5	18.5	20.5	22	24	19.5	21	23	18.5

Dimensions: JSY3000 Series

Type 10/Side Ported
D-sub Connector (IP20/Compact Type)

JJ5SY3-10FC$^{1}_{2}$-Stations$^{U}_{D}$-$^{C6}_{C8}$(D)

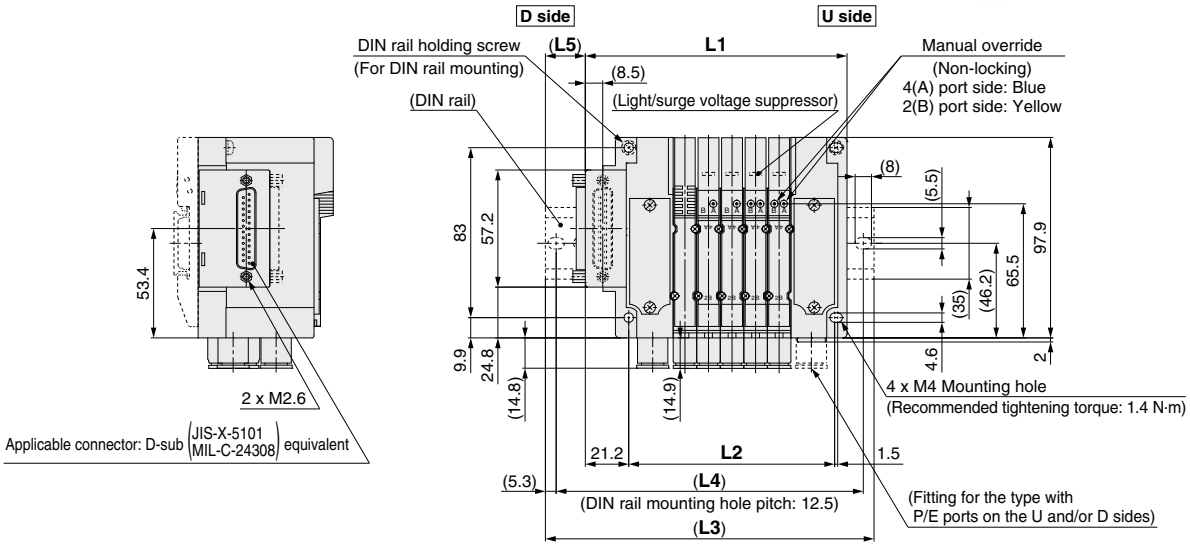

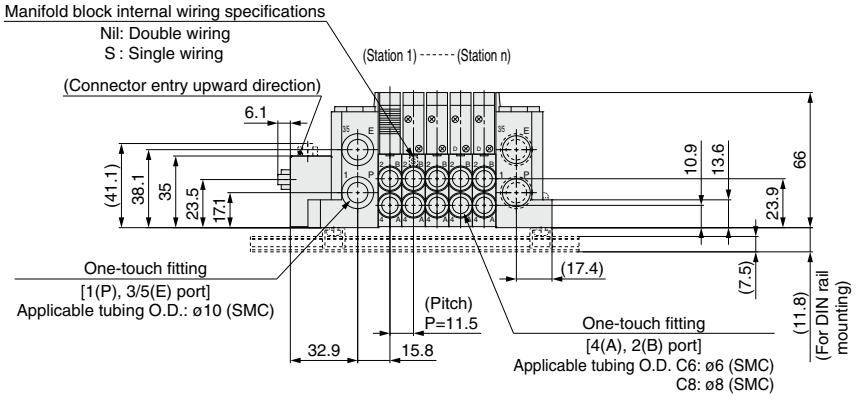

∗ These figures show the "JJ5SY3-10FC2-05D-C8."
∗ Refer to page 90 for dimensions of external pilot (Made to Order) and silencer.

L: Dimensions

n: Stations

L \ n	2	3	4	5	6	7	8	9	10	11	12	13	14	15	16
L1	93.3	104.8	116.3	127.8	139.3	150.8	162.3	173.8	185.3	196.8	208.3	219.8	231.3	242.8	254.3
L2	66.1	77.6	89.1	100.6	112.1	123.6	135.1	146.6	158.1	169.6	181.1	192.6	204.1	215.6	227.1
L3	123	135.5	148	160.5	173	185.5	198	210.5	223	235.5	248	260.5	260.5	273	285.5
L4	112.5	125	137.5	150	162.5	175	187.5	200	212.5	225	237.5	250	250	262.5	275
L5	18	18.5	19	19.5	20	20.5	21	21.5	22	22.5	23	23.5	17.5	18	18.5

L \ n	17	18	19	20	21	22	23	24
L1	265.8	277.3	288.8	300.3	311.8	323.3	334.8	346.3
L2	238.6	250.1	261.6	273.1	284.6	296.1	307.6	319.1
L3	298	310.5	323	335.5	348	360.5	373	385.5
L4	287.5	300	312.5	325	337.5	350	362.5	375
L5	19	19.5	20	20.5	21	21.5	22	22.5

Dimensions: JSY1000 Series

Type 10/Side Ported (Applicable to ø2 and ø4 fittings)
Flat Ribbon Cable (IP40/Connector Entry Direction Adjustable)

JJ5SY1-10 P/PG/PH 1/2 - Stations U/D/B - C2/C4 (D)

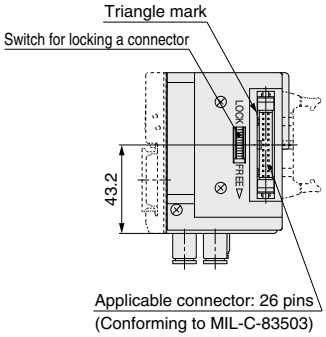

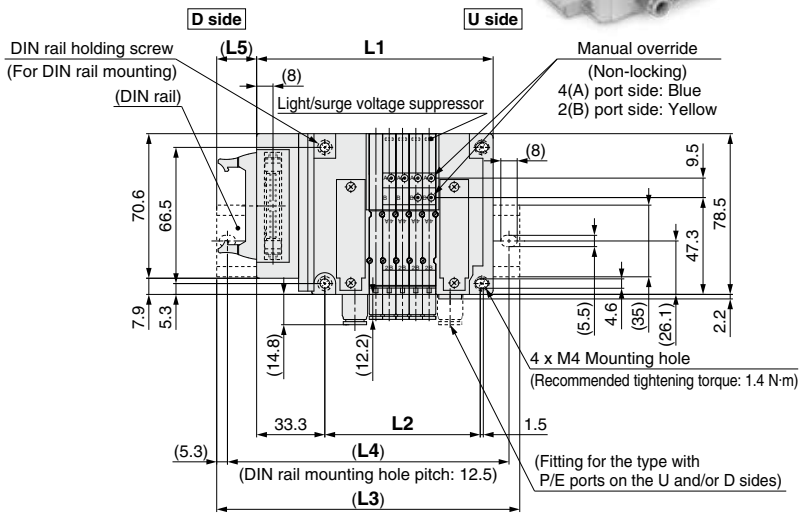

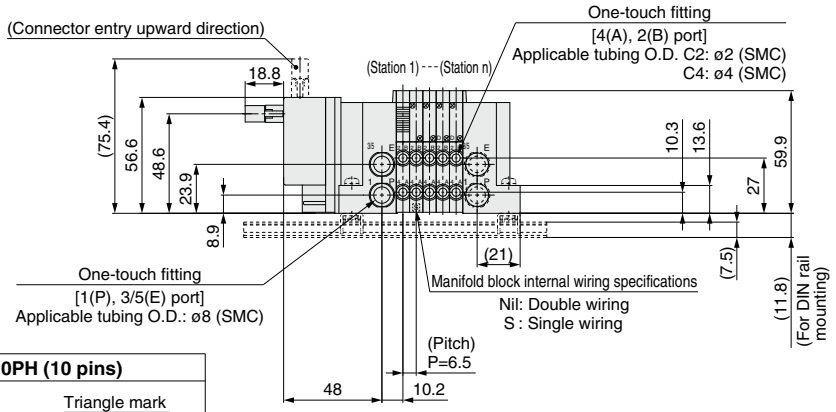

10PG (20 pins)	10PH (10 pins)
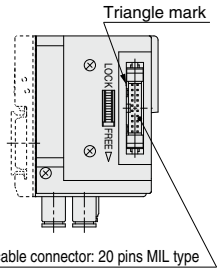	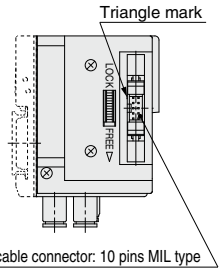

- These figures show the "JJ5SY1-10P2-05D-C4."
- Refer to page 89 for dimensions of external pilot (Made to Order) and silencer.
- Only connectors are different for 10PG and 10PH. L1 to L5 dimensions are the same as 10P type.
- When CM is selected for mixed A, B port size and C6 (9 mm pitch) is included, refer to page 92 for dimensions.

L: Dimensions

n: Stations

L \ n	2	3	4	5	6	7	8	9	10	11	12	13	14	15	16
L1	96	102.5	109	115.5	122	128.5	135	141.5	148	154.5	161	167.5	174	180.5	187
L2	56.4	62.9	69.4	75.9	82.4	88.9	95.4	101.9	108.4	114.9	121.4	127.9	134.4	140.9	147.4
L3	135.5	135.5	148	148	160.5	160.5	173	173	185.5	185.5	198	198	210.5	210.5	223
L4	125	125	137.5	137.5	150	150	162.5	162.5	175	175	187.5	187.5	200	200	212.5
L5	23	19.5	22.5	19.5	22.5	19	22	19	22	18.5	21.5	18.5	21.5	18	21

L \ n	17	18	19	20	21	22	23	24
L1	193.5	200	206.5	213	219.5	226	232.5	239
L2	153.9	160.4	166.9	173.4	179.9	186.4	192.9	199.4
L3	223	235.5	248	248	260.5	260.5	273	273
L4	212.5	225	237.5	237.5	250	250	262.5	262.5
L5	18	21	24	20.5	23.5	20.5	23.5	20

Dimensions: JSY1000 Series

Type 10/Side Ported (Applicable to ø6 fittings)
Flat Ribbon Cable (IP40/Connector Entry Direction Adjustable)

JJ5SY1-10 P/PG/PH 1/2 - Stations U/D/B - C6(D)

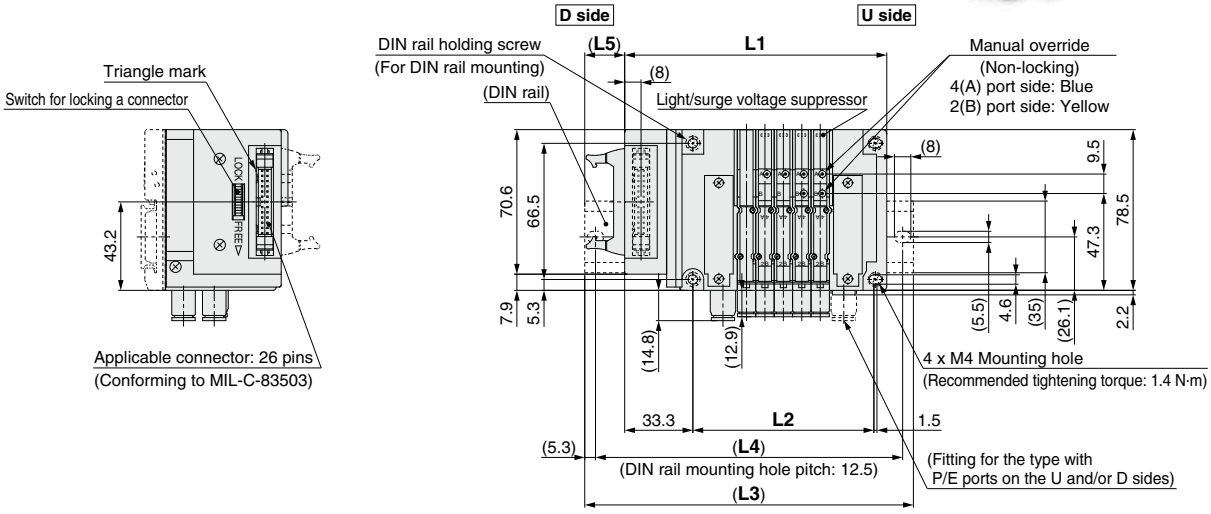

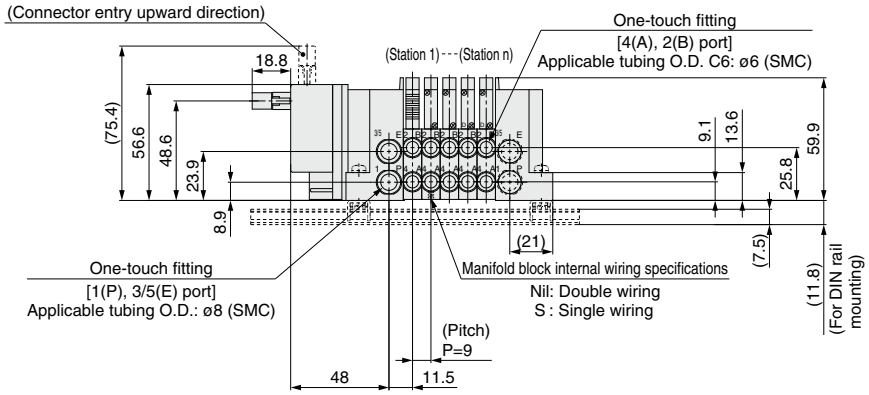

10PG (20 pins)	10PH (10 pins)
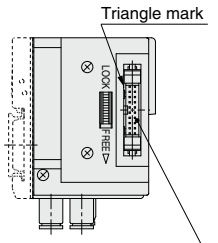	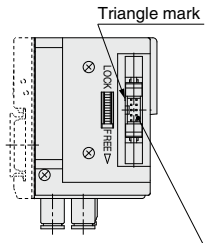

- These figures show the "JJ5SY1-10P2-05D-C6."
- Refer to page 89 for dimensions of external pilot (Made to Order) and silencer.
- Only connectors are different for 10PG and 10PH. L1 to L5 dimensions are the same as 10P type.
- When CM is selected for mixed A, B port size, refer to page 92 for dimensions.

L: Dimensions

n: Stations

L \ n	2	3	4	5	6	7	8	9	10	11	12	13	14	15	16	17	18	19	20	21	22	23	24
L1	101	110	119	128	137	146	155	164	173	182	191	200	209	218	227	236	245	254	263	272	281	290	299
L2	61.4	70.4	79.4	88.4	97.4	106.4	115.4	124.4	133.4	142.4	151.4	160.4	169.4	178.4	187.4	196.4	205.4	214.4	223.4	232.4	241.4	250.4	259.4
L3	135.5	148	160.5	160.5	173	185.5	185.5	198	210.5	223	223	235.5	248	248	260.5	273	285.5	285.5	298	310.5	310.5	323	335.5
L4	125	137.5	150	150	162.5	175	175	187.5	200	212.5	212.5	225	237.5	237.5	250	262.5	275	275	287.5	300	300	312.5	325
L5	20.5	22	24	19.5	21	23	18.5	20	22	23.5	19	21	22.5	18	20	21.5	23.5	19	20.5	22.5	18	19.5	21.5

Dimensions: JSY3000 Series

Type 10/Side Ported

Flat Ribbon Cable (IP40/Connector Entry Direction Adjustable)

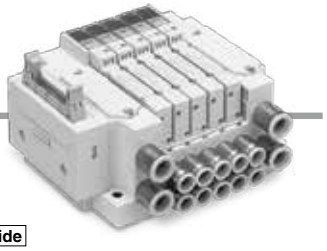

JJ5SY3-10 P/PG/PH 1/2 - Stations U/D/B - C6/C8 (D)

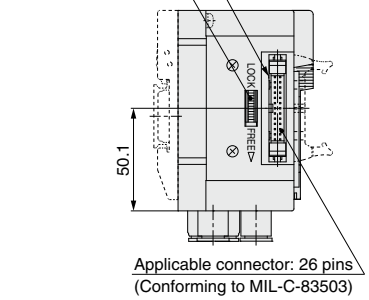

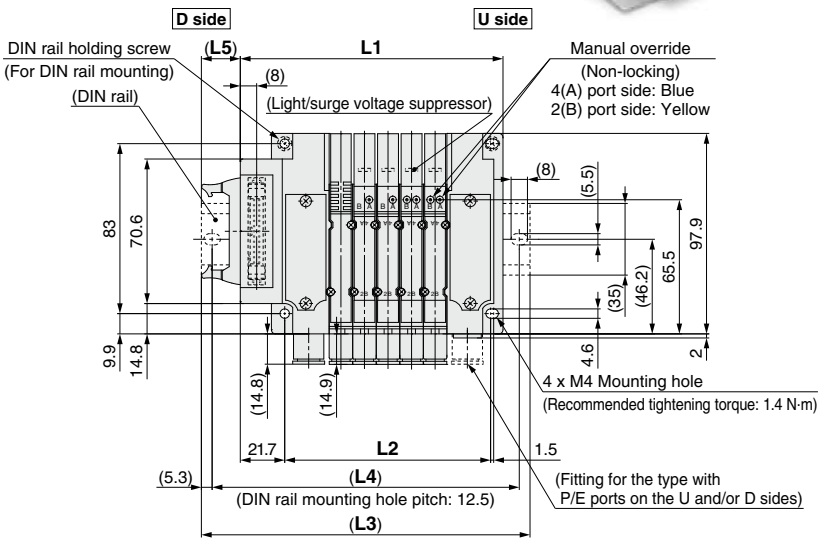

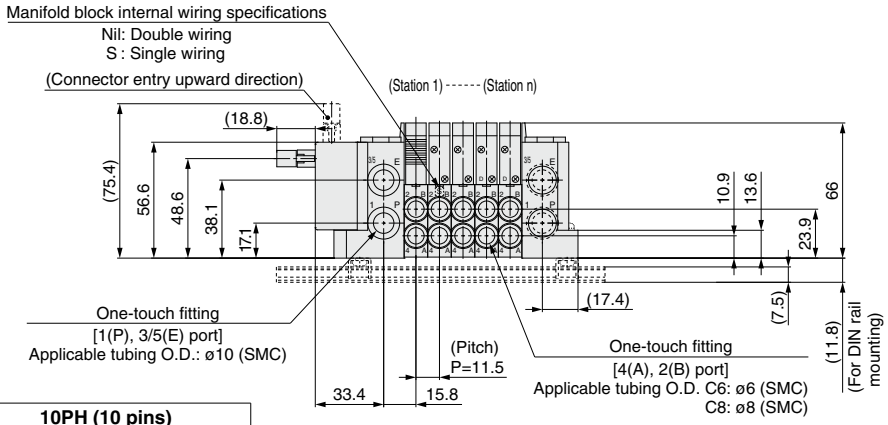

10PG (20 pins)	10PH (10 pins)
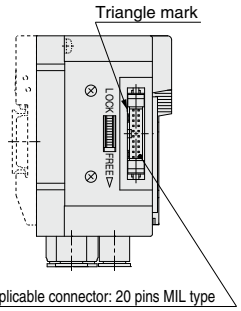	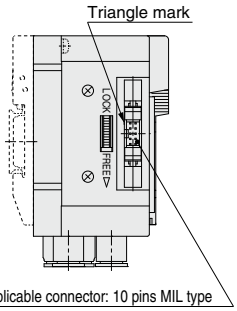

∗ These figures show the "JJ5SY3-10P2-05D-C8."
∗ Refer to page 90 for dimensions of external pilot (Made to Order) and silencer.
∗ Only connectors are different for 10PG and 10PH. L1 to L5 dimensions are the same as 10P type.

L: Dimensions

n: Stations

L \ n	2	3	4	5	6	7	8	9	10	11	12	13	14	15	16	17	18	19	20	21	22	23	24
L1	93.8	105.3	116.8	128.3	139.8	151.3	162.8	174.3	185.8	197.3	208.8	220.3	231.8	243.3	254.8	266.3	277.8	289.3	300.8	312.3	323.8	335.3	346.8
L2	66.1	77.6	89.1	100.6	112.1	123.6	135.1	146.6	158.1	169.6	181.1	192.6	204.1	215.6	227.1	238.6	250.1	261.6	273.1	284.6	296.1	307.6	319.1
L3	123	135.5	148	160.5	173	185.5	198	210.5	223	235.5	248	260.5	273	273	285.5	298	310.5	323	335.5	348	360.5	373	385.5
L4	112.5	125	137.5	150	162.5	175	187.5	200	212.5	225	237.5	250	262.5	262.5	275	287.5	300	312.5	325	337.5	350	362.5	375
L5	17.5	18	18.5	19	19.5	20	20.5	21	21.5	22	22.5	23	23.5	18	18.5	19	19.5	20	20.5	21	21.5	22	22.5

Dimensions: JSY5000 Series

Type 10/Side Ported

Flat Ribbon Cable (IP40/Connector Entry Direction Adjustable)

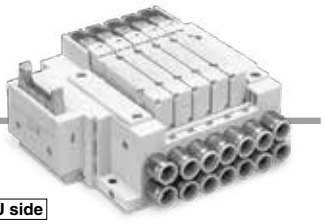

JJ5SY5-10 P/PG/PH 1/2 - Stations U/D/B - C10/C12 (D)

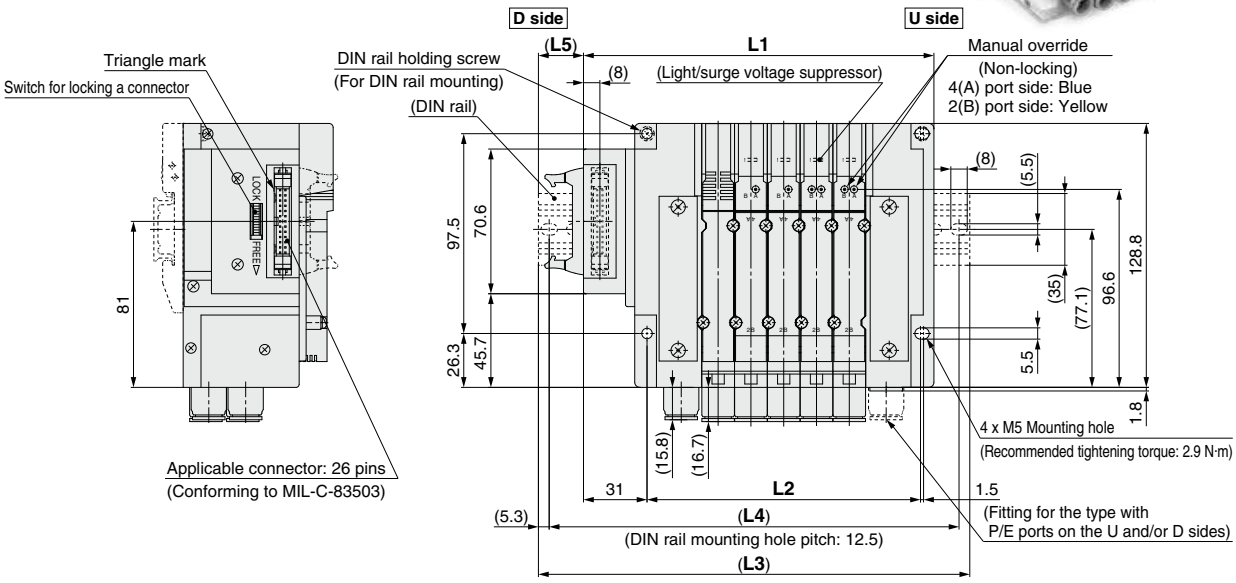

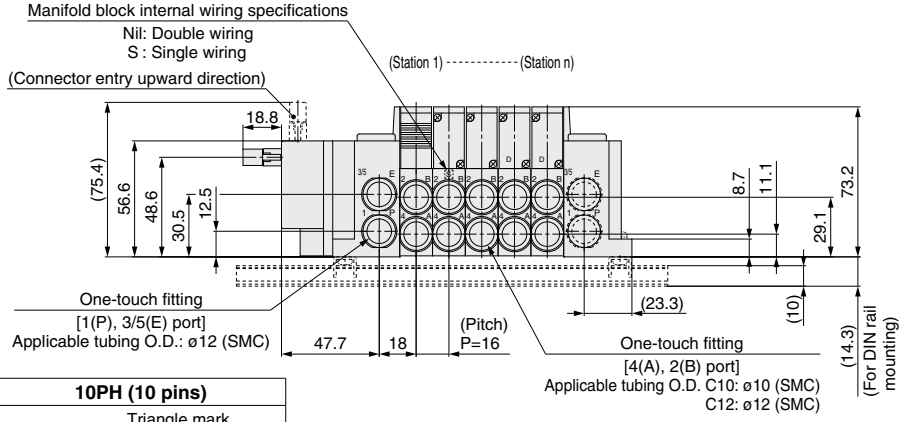

10PG (20 pins)	10PH (10 pins)
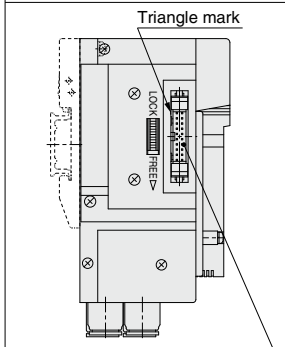	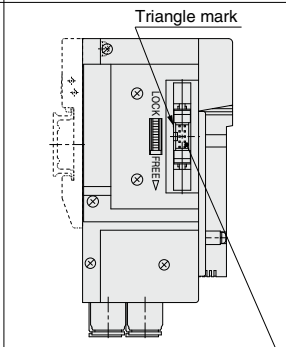

∗ These figures show the "JJ5SY5-10P2-05D-C12."
∗ Refer to page 91 for dimensions of external pilot (Made to Order) and silencer.
∗ Only connectors are different for 10PG and 10PH. L1 to L5 dimensions are the same as 10P type.

L: Dimensions

n: Stations

L \ n	2	3	4	5	6	7	8	9	10	11	12	13	14	15	16	17	18	19	20	21	22	23	24
L1	123	139	155	171	187	203	219	235	251	267	283	299	315	331	347	363	379	395	411	427	443	459	475
L2	85.5	101.5	117.5	133.5	149.5	165.5	181.5	197.5	213.5	229.5	245.5	261.5	277.5	293.5	309.5	325.5	341.5	357.5	373.5	389.5	405.5	421.5	437.5
L3	160.5	173	185.5	210.5	223	235.5	260.5	273	285.5	298	323	335.5	348	360.5	385.5	398	410.5	435.5	448	460.5	473	498	510.5
L4	150	162.5	175	200	212.5	225	250	262.5	275	287.5	312.5	325	337.5	350	375	387.5	400	425	437.5	450	462.5	487.5	500
L5	22	20	18.5	23	21	19.5	24	22	20.5	18.5	23	21.5	19.5	18	22.5	20.5	19	23.5	21.5	20	18	22.5	21

Dimensions: JSY1000 Series

Type 10/Side Ported (Applicable to ø2 and ø4 fittings)
Flat Ribbon Cable (IP20/Compact Type)

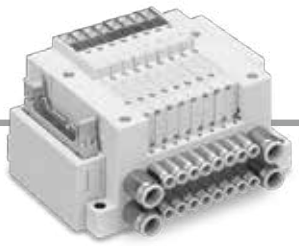

JJ5SY1-10 P/PG/PH C1/2 - Stations U/D/B - C2/C4 (D)

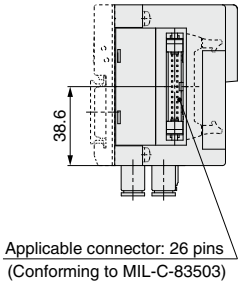

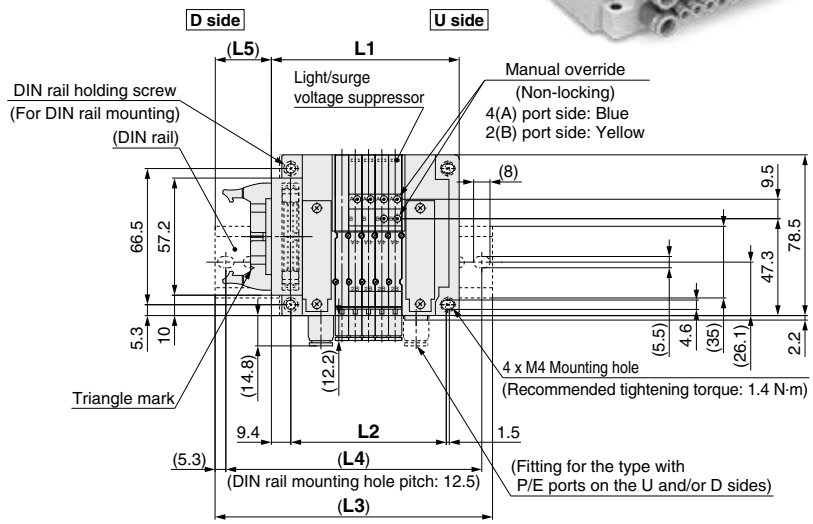

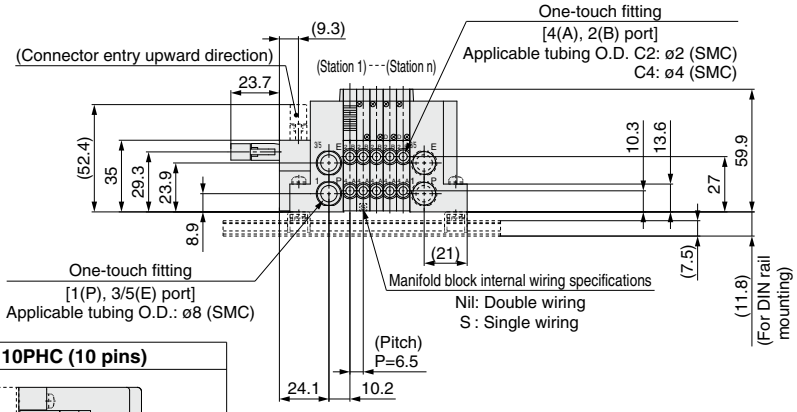

10PGC (20 pins)	10PHC (10 pins)
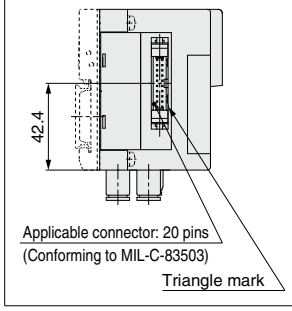	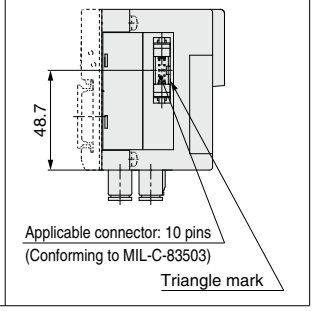

- These figures show the "JJ5SY1-10PC2-05D-C4."
- Refer to page 89 for dimensions of external pilot (Made to Order) and silencer.
- Only connectors are different for 10PGC and 10PHC. L1 to L5 dimensions are the same as 10PC type.
- When CM is selected for mixed A, B port size and C6 (9 mm pitch) is included, refer to page 92 for dimensions.

L: Dimensions

n: Stations

L \ n	2	3	4	5	6	7	8	9	10	11	12	13	14	15	16
L1	72.1	78.6	85.1	91.6	98.1	104.6	111.1	117.6	124.1	130.6	137.1	143.6	150.1	156.6	163.1
L2	56.4	62.9	69.4	75.9	82.4	88.9	95.4	101.9	108.4	114.9	121.4	127.9	134.4	140.9	147.4
L3	110.5	123	123	135.5	135.5	148	148	160.5	160.5	173	173	185.5	185.5	198	198
L4	100	112.5	112.5	125	125	137.5	137.5	150	150	162.5	162.5	175	175	187.5	187.5
L5	25	28	24.5	27.5	24.5	27.5	24	27	24	27	23.5	26.5	23.5	26.5	23

L \ n	17	18	19	20	21	22	23	24
L1	169.6	176.1	182.6	189.1	195.6	202.1	208.6	215.1
L2	153.9	160.4	166.9	173.4	179.9	186.4	192.9	199.4
L3	210.5	210.5	223	235.5	235.5	248	248	260.5
L4	200	200	212.5	225	225	237.5	237.5	250
L5	26	23	26	29	25.5	28.5	25.5	28.5

Dimensions: JSY1000 Series

Type 10/Side Ported (Applicable to ø6 fittings)
Flat Ribbon Cable (IP20/Compact Type)

JJ5SY1-10 P/PG/PH C1/2- Stations U/D/B - C6(D)

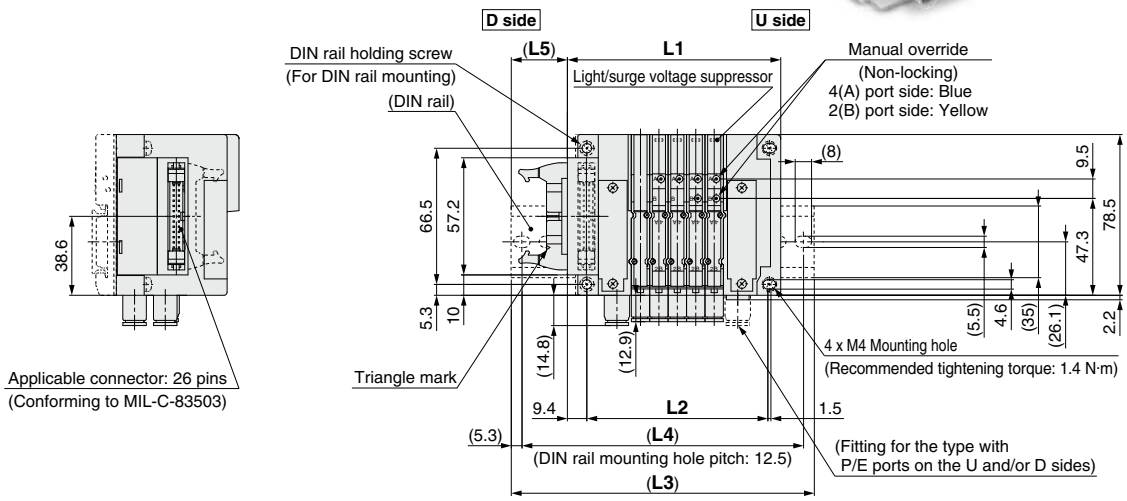

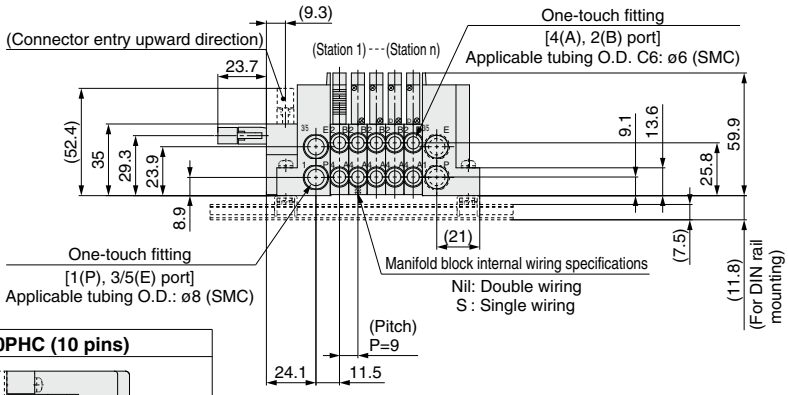

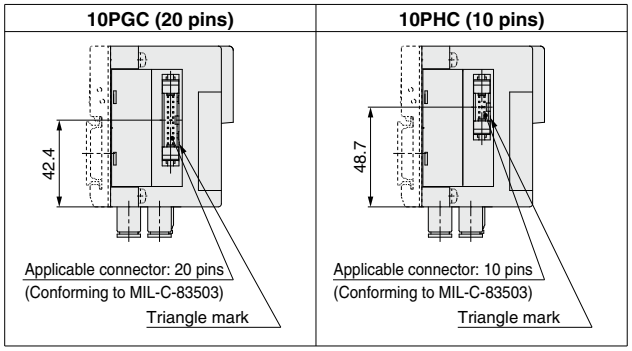

- These figures show the "JJ5SY1-10PC2-05D-C6."
- Refer to page 89 for dimensions of external pilot (Made to Order) and silencer.
- Only connectors are different for 10PGC and 10PHC. L1 to L5 dimensions are the same as 10PC type.
- When CM is selected for mixed A, B port size, refer to page 92 for dimensions.

L: Dimensions

n: Stations

L \ n	2	3	4	5	6	7	8	9	10	11	12	13	14	15	16
L1	77.1	86.1	95.1	104.1	113.1	122.1	131.1	140.1	149.1	158.1	167.1	176.1	185.1	194.1	203.1
L2	61.4	70.4	79.4	88.4	97.4	106.4	115.4	124.4	133.4	142.4	151.4	160.4	169.4	178.4	187.4
L3	123	123	135.5	148	148	160.5	173	185.5	185.5	198	210.5	210.5	223	235.5	248
L4	112.5	112.5	125	137.5	137.5	150	162.5	175	175	187.5	200	200	212.5	225	237.5
L5	28.5	24	26	27.5	23	25	26.5	28.5	24	25.5	27.5	23	24.5	26.5	28

L \ n	17	18	19	20	21	22	23	24
L1	212.1	221.1	230.1	239.1	248.1	257.1	266.1	275.1
L2	196.4	205.4	214.4	223.4	232.4	241.4	250.4	259.4
L3	248	260.5	273	285.5	285.5	298	310.5	310.5
L4	237.5	250	262.5	275	275	287.5	300	300
L5	23.5	25.5	27	29	24.5	26	28	23.5

Dimensions: JSY3000 Series

Type 10/Side Ported
Flat Ribbon Cable (IP20/Compact Type)

JJ5SY3-10 P/PG/PH C1/2- Stations U/D/B - C6/C8 (D)

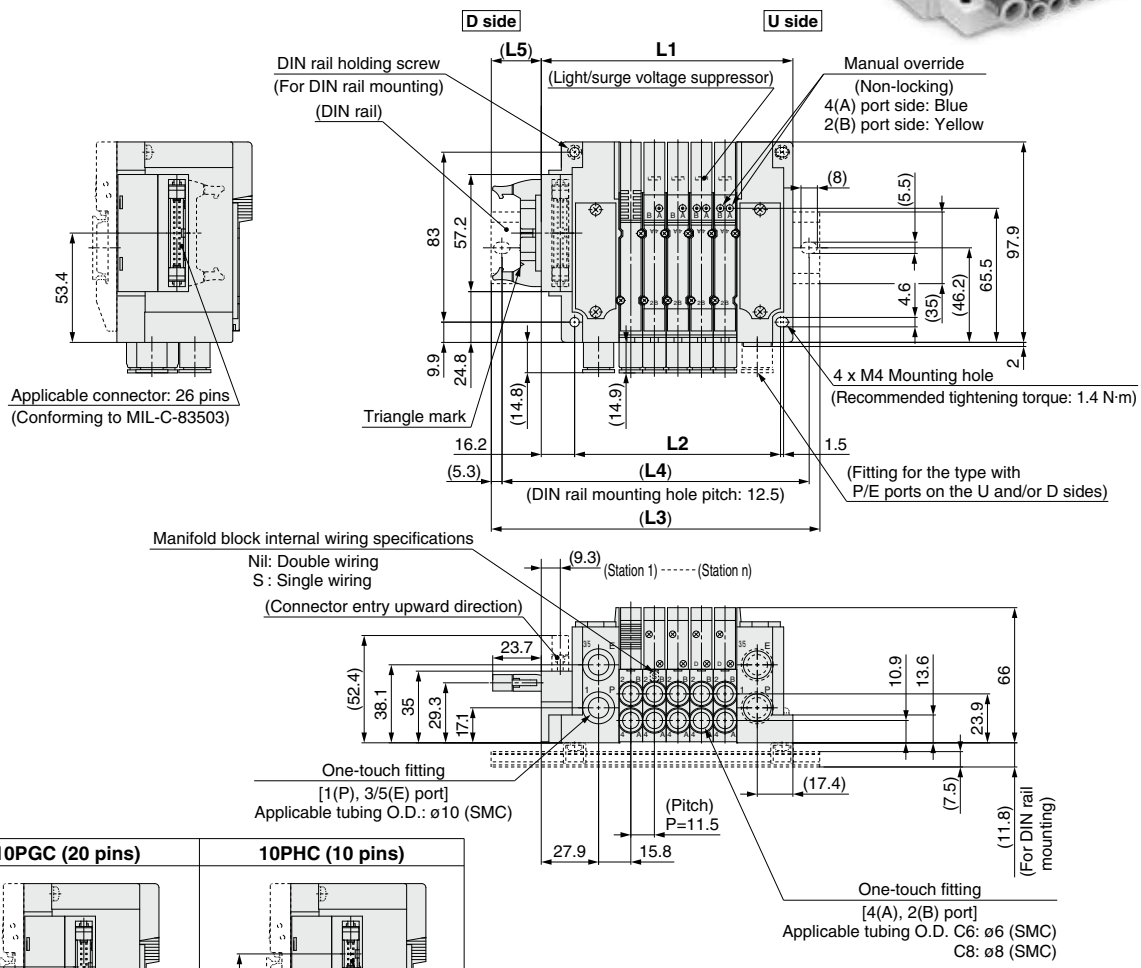

10PGC (20 pins)	10PHC (10 pins)
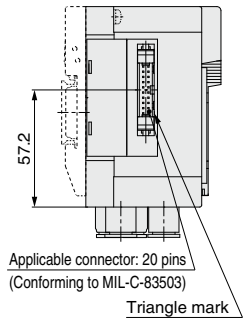	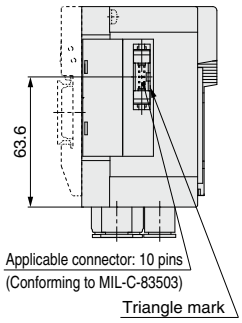

∗ These figures show the "JJ5SY3-10PC2-05D-C8."
∗ Refer to page 90 for dimensions of external pilot (Made to Order) and silencer.
∗ Only connectors are different for 10PGC and 10PHC. L1 to L5 dimensions are the same as 10PC type.

L: Dimensions

n: Stations

L \ n	2	3	4	5	6	7	8	9	10	11	12	13	14	15	16
L1	88.3	99.8	111.3	122.8	134.3	145.8	157.3	168.8	180.3	191.8	203.3	214.8	226.3	237.8	249.3
L2	66.1	77.6	89.1	100.6	112.1	123.6	135.1	146.6	158.1	169.6	181.1	192.6	204.1	215.6	227.1
L3	123	135.5	148	160.5	173	185.5	198	210.5	223	235.5	248	260.5	273	273	285.5
L4	112.5	125	137.5	150	162.5	175	187.5	200	212.5	225	237.5	250	262.5	262.5	275
L5	23	23.5	24	24.5	25	25.5	26	26.5	27	27.5	28	28.5	29	23	23.5

L \ n	17	18	19	20	21	22	23	24
L1	260.8	272.3	283.8	295.3	306.8	318.3	329.8	341.3
L2	238.6	250.1	261.6	273.1	284.6	296.1	307.6	319.1
L3	298	310.5	323	335.5	348	360.5	373	385.5
L4	287.5	300	312.5	325	337.5	350	362.5	375
L5	24	24.5	25	25.5	26	26.5	27	27.5

Electrical Wiring Specifications

D-sub connector

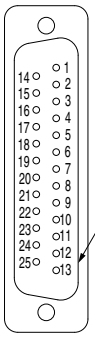

If alignment is not specified, the internal wiring is double wiring (connected to SOL. a and SOL. b) regardless of number of stations, valve and option types.

Connector terminal no.

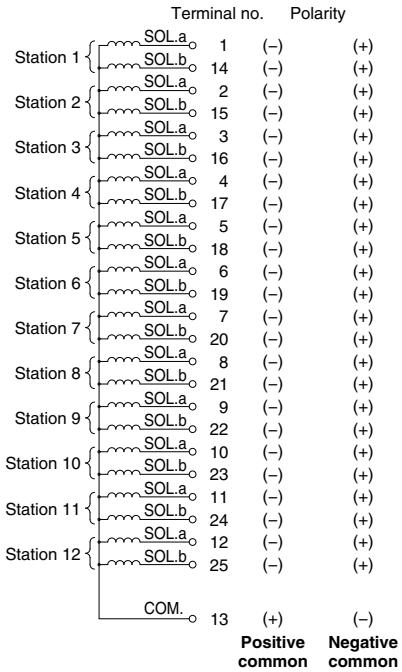

∗ When using a valve with no polarity, either positive common or negative common can be used.

Specified Layout

(25 pins)

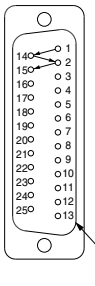

Mixed wiring of single and double wiring can be specified on the manifold specification sheet. The maximum number of stations is determined according to the number of solenoids. The total number of solenoids should be 24 or less. 1 solenoid is required for 2-position single, and 2 solenoids for 2-position double, 3-position and 4-position.

Connector Cable

AXT100-DS25-015 / 030 / 050 [IP20/40]

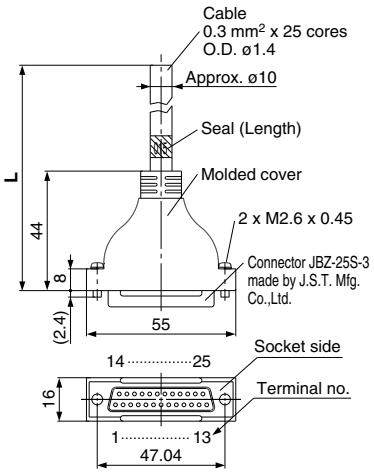

SY30M-DS25-015 / 030 / 050 [IP67]

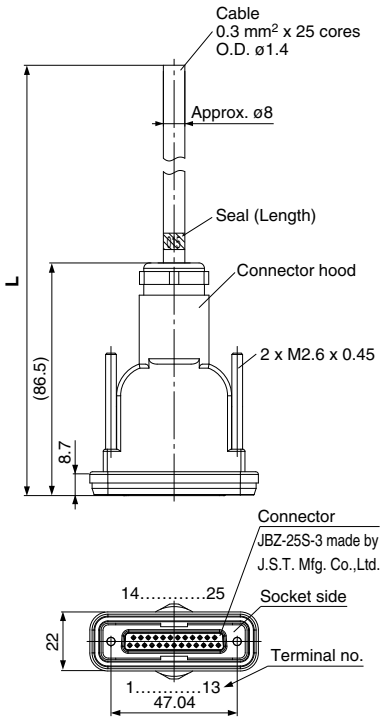

D-sub connector cable [IP20/40 compliant]

Cable length (**L**)	Assembly part no.	Note
1.5 m	AXT100-DS25-015	Cable 0.3 mm² x 25 cores
3 m	AXT100-DS25-030	
5 m	AXT100-DS25-050	

∗ When using a standard commercial connector, use a 25-pin type female connector conforming to MIL-C-24308.
∗ Cannot be used for movable wiring.
∗ Lengths other than the above are also available. Please contact SMC for details.

D-sub connector cable [IP67 compliant]

Cable length (**L**)	Assembly part no.	Note
1.5 m	SY30M-DS25-015	Cable 0.3 mm² x 25 cores
3 m	SY30M-DS25-030	
5 m	SY30M-DS25-050	

∗ Be sure to use the connector cable in the table, to satisfy enclosure IP67.
∗ Cannot be used for movable wiring.

Electrical characteristics

Item	Property
Conductor resistance Ω/km, 20°C	65 or less
Voltage limit V, 1 minute, AC	1000
Insulation resistance MΩ/km, 20°C	5 or more

∗ The minimum bending radius of the D-sub connector cable is 20 mm.

Connector Manufacturers' Example

- Fujitsu Limited
- Japan Aviation Electronics Industry, Limited
- J.S.T. Mfg. Co., Ltd.
- HIROSE ELECTRIC CO., LTD.

D-sub connector cable terminal numbers

Terminal no.	1	2	3	4	5	6	7	8	9	10	11	12	13	14	15	16	17	18	19	20	21	22	23	24	25
Lead wire color	Black	Brown	Red	Orange	Yellow	Pink	Blue	Purple	Gray	White	White	Yellow	Orange	Yellow	Pink	Blue	Purple	Gray	Orange	Red	Brown	Pink	Gray	Black	White
Dot marking	None	None	None	None	None	None	None	White	Black	Black	Red	Red	Red	Black	Black	White	None	None	Black	White	White	Red	Red	White	None

Electrical Wiring Specifications

Flat ribbon cable connector

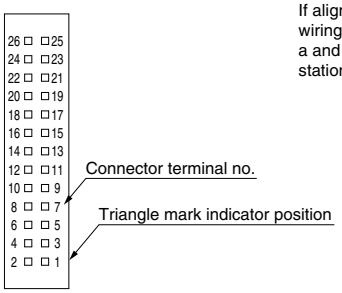

If alignment is not specified, the internal wiring is double wiring (connected to SOL. a and SOL. b) regardless of number of stations, valve and option types.

P, PC: Flat ribbon cable (26 pins)

<Double wiring>

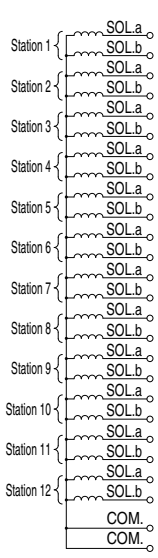

Terminal no.	Polarity: Positive common	Polarity: Negative common
1	(–)	(+)
2	(–)	(+)
3	(–)	(+)
4	(–)	(+)
5	(–)	(+)
6	(–)	(+)
7	(–)	(+)
8	(–)	(+)
9	(–)	(+)
10	(–)	(+)
11	(–)	(+)
12	(–)	(+)
13	(–)	(+)
14	(–)	(+)
15	(–)	(+)
16	(–)	(+)
17	(–)	(+)
18	(–)	(+)
19	(–)	(+)
20	(–)	(+)
21	(–)	(+)
22	(–)	(+)
23	(–)	(+)
24	(–)	(+)
25	(+)	(–)
26	(+)	(–)

PG, PGC: Flat ribbon cable (20 pins)

<Double wiring>

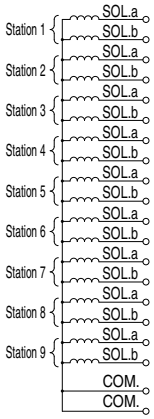

Terminal no.	Polarity: Positive common	Polarity: Negative common
1	(–)	(+)
2	(–)	(+)
3	(–)	(+)
4	(–)	(+)
5	(–)	(+)
6	(–)	(+)
7	(–)	(+)
8	(–)	(+)
9	(–)	(+)
10	(–)	(+)
11	(–)	(+)
12	(–)	(+)
13	(–)	(+)
14	(–)	(+)
15	(–)	(+)
16	(–)	(+)
17	(–)	(+)
18	(–)	(+)
19	(+)	(–)
20	(+)	(–)

PH, PHC: Flat ribbon cable (10 pins)

<Double wiring>

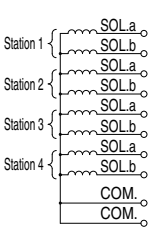

Terminal no.	Polarity: Positive common	Polarity: Negative common
1	(–)	(+)
2	(–)	(+)
3	(–)	(+)
4	(–)	(+)
5	(–)	(+)
6	(–)	(+)
7	(–)	(+)
8	(–)	(+)
9	(+)	(–)
10	(+)	(–)

* When using a valve with no polarity, either positive common or negative common can be used.

Flat Ribbon Cable Connector

AXT100-FC 10 1 / 20 - 2 / 26 3

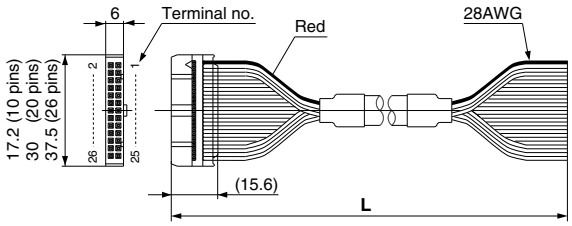

Flat ribbon cable connector

Cable length (**L**)	Assembly part no.		
	26 pins	20 pins	10 pins
1.5 m	AXT100-FC26-1	AXT100-FC20-1	AXT100-FC10-1
3 m	AXT100-FC26-2	AXT100-FC20-2	AXT100-FC10-2
5 m	AXT100-FC26-3	AXT100-FC20-3	AXT100-FC10-3

∗ When using a standard commercial connector, use a 26-pin, 20-pin or 10-pin type connector conforming to MIL-C-83503 with strain relief.
∗ Cannot be used for movable wiring.
∗ Lengths other than the above are also available. Please contact SMC for details.

Connector Manufacturers' Example

- HIROSE ELECTRIC CO., LTD.
- 3M Japan Limited
- Fujitsu Limited
- Japan Aviation Electronics Industry, Limited
- J.S.T. Mfg. Co., Ltd.
- Oki Electric Cable Co., Ltd.

Specified Layout

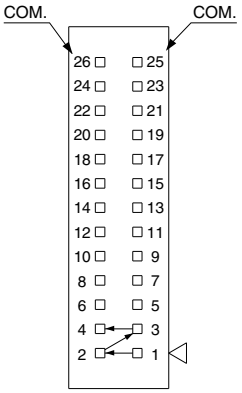

(P, PC: 26 pins)

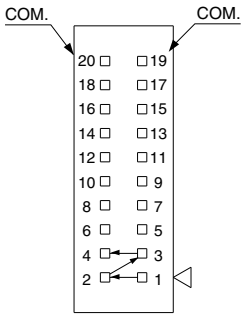

(PG, PGC: 20 pins)

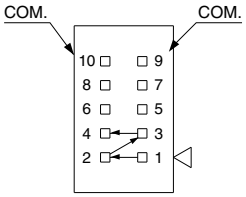

(PH, PHC: 10 pins)

Mixed wiring of single and double wiring can be specified on the manifold specification. The maximum number of stations is determined according to the number of solenoids. The total number of solenoids should be 24 or less for P and PC, 18 or less for PG and PGC, and 8 or less for PH and PHC. 1 solenoid is required for 2-position single, and 2 solenoids for 2-position double, 3-position and 4-position.

Plug-in Connector Connecting Base

Spring Type Terminal Block Box **Terminal Block Box**

Type 10 Side Ported

JSY1000/3000/5000 Series

CE RoHS

Internal Pilot

How to Order Manifolds

JJ5SY 3 – 10 TC – 05 D □ – C6 □

❶ ❷ ❸ ❹ ❺ ❻ ❼ ❽

Made to Order
(Refer to page 114 for details.)

Specification
External pilot (SUP/EXH block assembly)

❶ Series

1	JSY1000
3	JSY3000
5	JSY5000

❷ Type

10	Side ported

❸ Wiring

TC	Spring type terminal block box
T	Terminal block box

❹ Valve stations

TC: Spring type terminal block box

Symbol	Stations	Note
02	2 stations	Double wiring*1
⋮	⋮	
16	16 stations	
02	2 stations	Specified layout*2 (Up to 32 solenoids available)
⋮	⋮	
24	24 stations	

T: Terminal block box

Symbol	Stations	Note
02	2 stations	Double wiring*1
⋮	⋮	
10	10 stations	
02	2 stations	Specified layout*2 (Up to 20 solenoids available)
⋮	⋮	
20	20 stations	

*1 Double wiring: 2-position single, double, 3-position, and 4-position valves can be used on all manifold stations.
Use of a 2-position single solenoid will result in an unused control signal. If this is not desired, order with a specified layout.
*2 Specified layout: Indicate the wiring specifications on the manifold specification sheet. (Note that 2-position double, 3-position, and 4-position valves cannot be used where single wiring has been specified.)
*3 This also includes the number of blanking plates.

❺ P, E port entry

U	U side (2 to 10 stations)
D	D side (2 to 10 stations)
B	Both sides (2 to 24 stations)

❻ SUP/EXH block assembly

Nil	Internal pilot
S	Internal pilot, Built-in silencer

* 3/5(E) port is plugged for the built-in silencer type.
* When the built-in silencer type is used, keep the exhaust port from coming in direct contact with water or other liquids.
* The external pilot specification should be ordered as Made to Order. For details, refer to page 114.

❼ A, B port size (Metric/One-touch fitting)

Symbol		A, B port	JSY1000	JSY3000	JSY5000
C2	Straight	ø2	●	—	—
C4		ø4	●	—	—
C6		ø6	●	●	—
C8		ø8	—	●	—
C10		ø10	—	—	●
C12		ø12	—	—	●
CM*1		Straight port, mixed sizes	●	●	●
P, E port size (One-touch fittings)			ø8	ø10	ø12

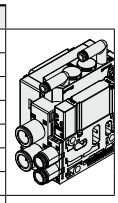

*1 Indicate the sizes on the manifold specification sheet in the case of "CM."
* The JSY1000 manifold pitch for C2 and C4 is 6.5 mm, and 9 mm for C6. When CM is selected, the manifold pitch is different depending on the selected fitting.

❽ Mounting and Option

Symbol	Mounting
Nil	Direct mounting
D□	DIN rail mounting

* Enter the number of stations inside □ when it is larger than the number of valve stations. (Refer to "DIN Rail Option" shown below.)
* Refer to page 118 for the fixation of DIN rail mounting type manifold.

DIN Rail Option

Nil	DIN rail mounting (With DIN rail)	
0	DIN rail mounting (Without DIN rail)	
3	For 3 stations	Specify a longer rail than the standard length.
⋮	⋮	
24	For 24 stations	

How to Order Manifold Assembly

Example (JJ5SY3-10TC-□)

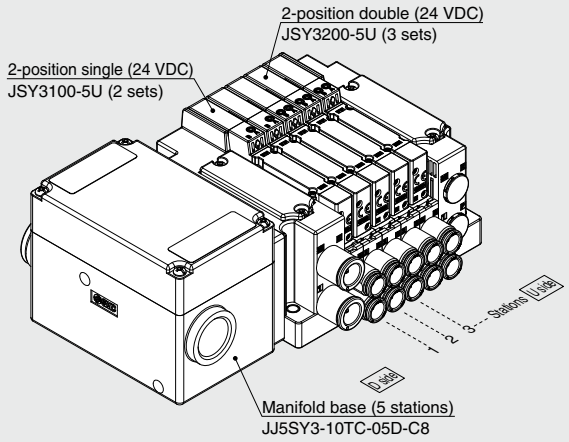

JJ5SY3-10TC-05D-C8 ··· 1 set (Type 10 5-station manifold base part no.)
∗ JSY3100-5U ····· 2 sets (2-position single part no.)
∗ JSY3200-5U ····· 3 sets (2-position double part no.)
→ The asterisk denotes the symbol for the assembly. Prefix it to the part numbers of the valve, etc.

- The valve arrangement is numbered as the 1st station from the D side.
- Under the manifold part number, state the valves to be mounted in order from the 1st station as shown in the figure. If the arrangement becomes complicated, specify on a manifold specification sheet.

Internal Pilot

How to Order Valves (With mounting screw)

Refer to page 11 for valve specifications.

With power saving circuit

JSY1000 Series JSY 1 1 0 0 T – 5 Z

JSY3000/5000 Series JSY 3 1 0 0 – 5 Z

❶ ❷ ❸ ❹ ❺ ❻

Base mounted

Made to Order (Refer to page 114 for details.)

Specification
With power saving circuit (Continuous duty type): 0.1 W (JSY3000/5000)
External pilot

❶ Series

1	JSY1000
3	JSY3000
5	JSY5000

❸ Pilot valve exhaust method

0	Pilot valve individual exhaust

❹ Rated voltage

5	24 VDC

⚠ Caution

If the JSY3000/5000 series will be continuously energized, please be sure to use the power saving circuit (continuous duty type). Refer to Made to Order on page 114. Additionally, when it is used at the energizing rate over 50%, please select the product with power saving circuit.
For the JSY1000 series only the power saving circuit is available.

❷ Type of actuation

1	2-position	Single
2		Double
3	3-position	Closed center
4		Exhaust center
5		Pressure center
A	4-position dual 3-port	N.C./N.C.
B		N.O./N.O.
C		N.C./N.O.

❺ Light/surge voltage suppressor and common specification

Symbol	With light	Surge voltage suppressor	Common specification
U	●	●	Non-polar
Z			Positive common
NZ			Negative common

∗ Only "Z" and "NZ" types are available for the JSY1000 series.
∗ When non-polar common specification type is selected, take measures to prevent surge voltage. For details, refer to page 117.

❻ Manual override

Nil: Non-locking push type

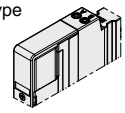

D: Push-turn locking slotted type

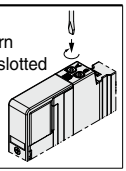

E: Push-turn locking lever type

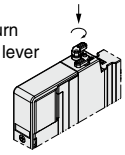

∗ Push-turn locking lever type "E" is not available for the JSY1000.

∗ **When ordering a valve individually, the base gasket is not included.**
Since the base gasket is attached to the manifold, please order the base gasket separately if it is needed for maintenance service.
Refer to page 107 for base gasket and mounting screw part numbers.

⚠ Protective class class Ⅲ (Mark: Ⅲ)

Dimensions: JSY1000 Series

Type 10/Side Ported (Applicable to ø2 and ø4 fittings)
Spring Type Terminal Block Box

JJ5SY1-10TC-Stations U/D/B-C2/C4(D)

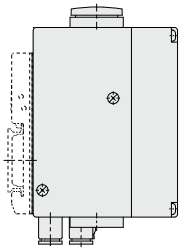

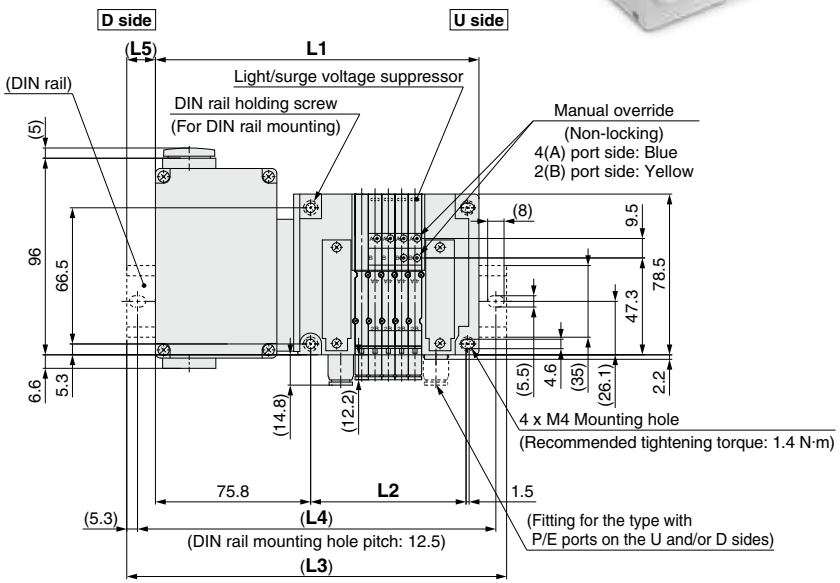

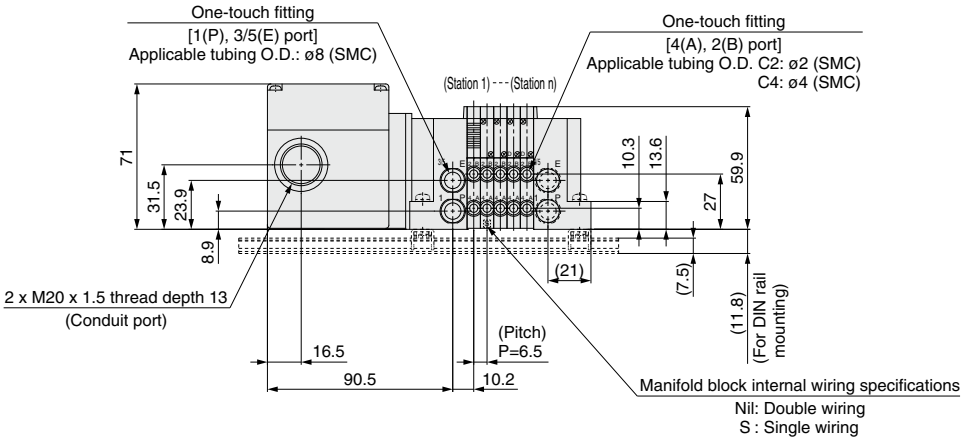

∗ These figures show the "JJ5SY1-10TC-05D-C4."
∗ Refer to page 89 for dimensions of external pilot (Made to Order) and silencer.
∗ When CM is selected for mixed A, B port size and C6 (9 mm pitch) is included, refer to page 92 for dimensions.

L: Dimensions

n: Stations

L \ n	2	3	4	5	6	7	8	9	10	11	12	13	14	15	16
L1	138.5	145	151.5	158	164.5	171	177.5	184	190.5	197	203.5	210	216.5	223	229.5
L2	56.4	62.9	69.4	75.9	82.4	88.9	95.4	101.9	108.4	114.9	121.4	127.9	134.4	140.9	147.4
L3	173	173	185.5	185.5	198	198	210.5	210.5	223	223	235.5	235.5	248	248	260.5
L4	162.5	162.5	175	175	187.5	187.5	200	200	212.5	212.5	225	225	237.5	237.5	250
L5	17.5	14	17	14	17	13.5	16.5	13.5	16.5	13	16	13	16	12.5	15.5

L \ n	17	18	19	20	21	22	23	24
L1	236	242.5	249	255.5	262	268.5	275	281.5
L2	153.9	160.4	166.9	173.4	179.9	186.4	192.9	199.4
L3	260.5	273	273	285.5	285.5	298	310.5	310.5
L4	250	262.5	262.5	275	275	287.5	300	300
L5	12.5	15.5	12	15	12	15	18	14.5

Dimensions: JSY1000 Series

Type 10/Side Ported (Applicable to ø6 fittings)
Spring Type Terminal Block Box

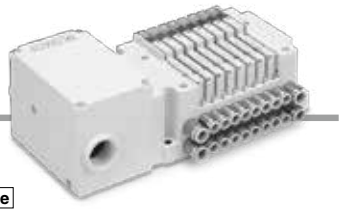

JJ5SY1-10TC-Stations U/D/B-C6(D)

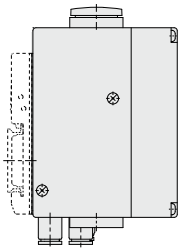

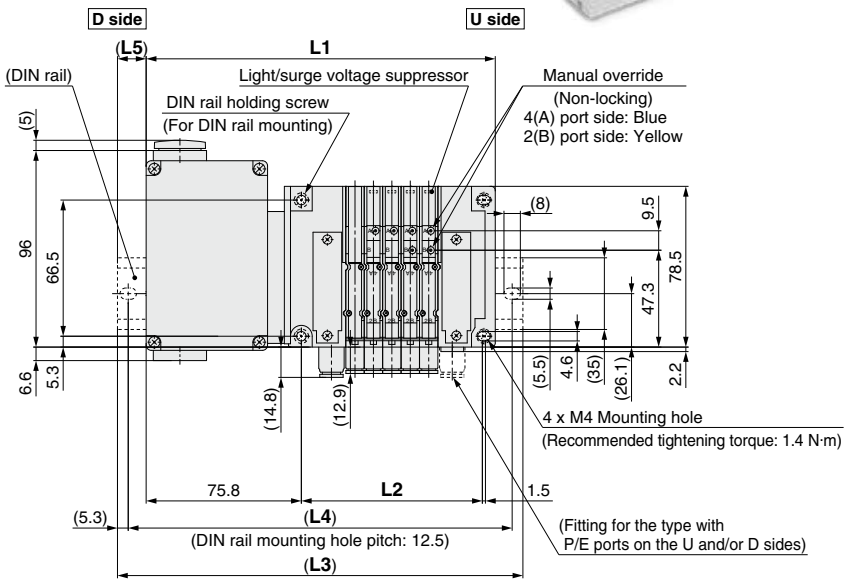

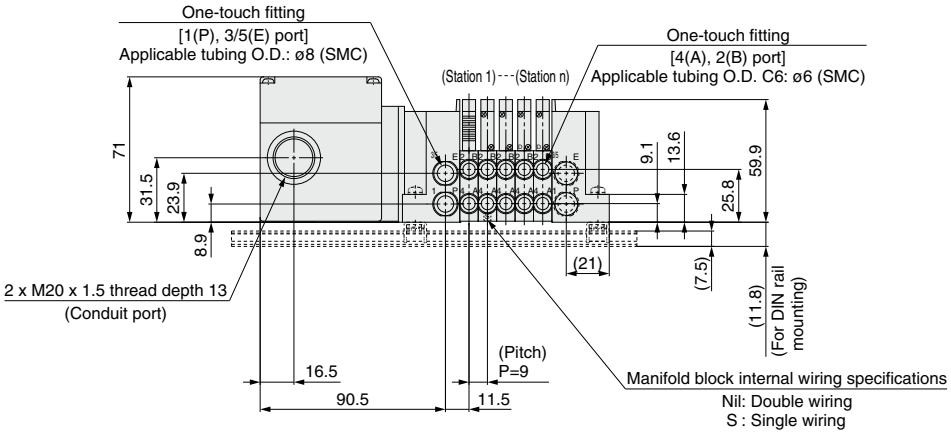

∗ These figures show the "JJ5SY1-10TC-05D-C6."
∗ Refer to page 89 for dimensions of external pilot (Made to Order) and silencer.
∗ When CM is selected for mixed A, B port size, refer to page 92 for dimensions.

L: Dimensions

n: Stations

L \ n	2	3	4	5	6	7	8	9	10	11	12	13	14	15	16
L1	143.5	152.5	161.5	170.5	179.5	188.5	197.5	206.5	215.5	224.5	233.5	242.5	251.5	260.5	269.5
L2	61.4	70.4	79.4	88.4	97.4	106.4	115.4	124.4	133.4	142.4	151.4	160.4	169.4	178.4	187.4
L3	173	185.5	185.5	198	210.5	223	223	235.5	248	248	260.5	273	285.5	285.5	298
L4	162.5	175	175	187.5	200	212.5	212.5	225	237.5	237.5	250	262.5	275	275	287.5
L5	15	16.5	12	14	15.5	17.5	13	14.5	16.5	12	13.5	15.5	17	12.5	14.5

L \ n	17	18	19	20	21	22	23	24
L1	278.5	287.5	296.5	305.5	314.5	323.5	332.5	341.5
L2	196.4	205.4	214.4	223.4	232.4	241.4	250.4	259.4
L3	310.5	323	323	335.5	348	348	360.5	373
L4	300	312.5	312.5	325	337.5	337.5	350	362.5
L5	16	18	13.5	15	17	12.5	14	16

Dimensions: JSY3000 Series

Type 10/Side Ported
Spring Type Terminal Block Box

JJ5SY3-10TC-Stations U/D/B-C6/C8(D)

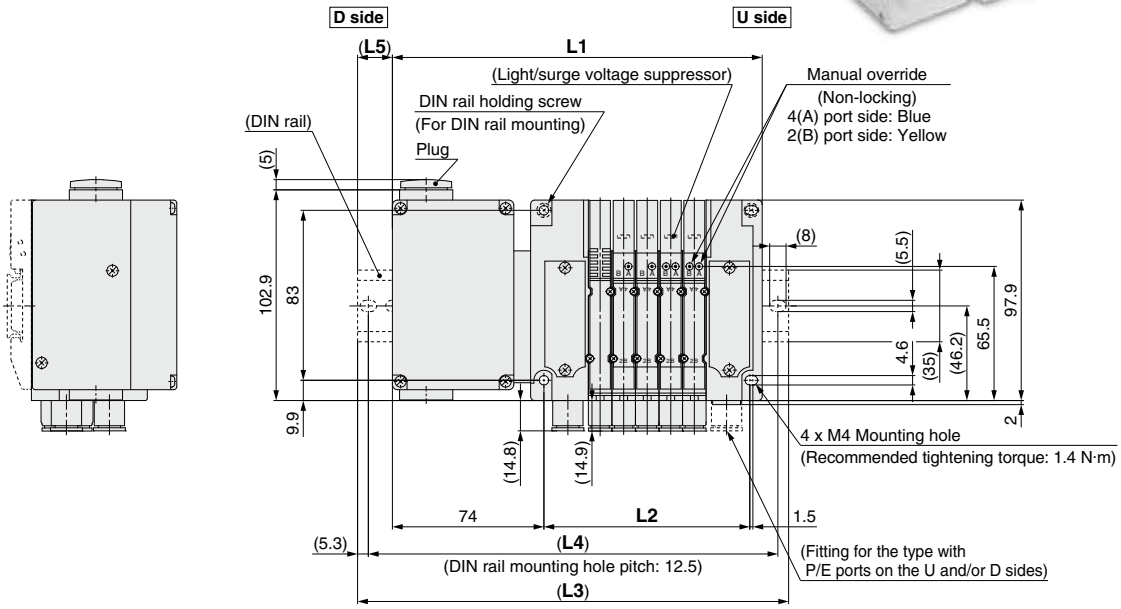

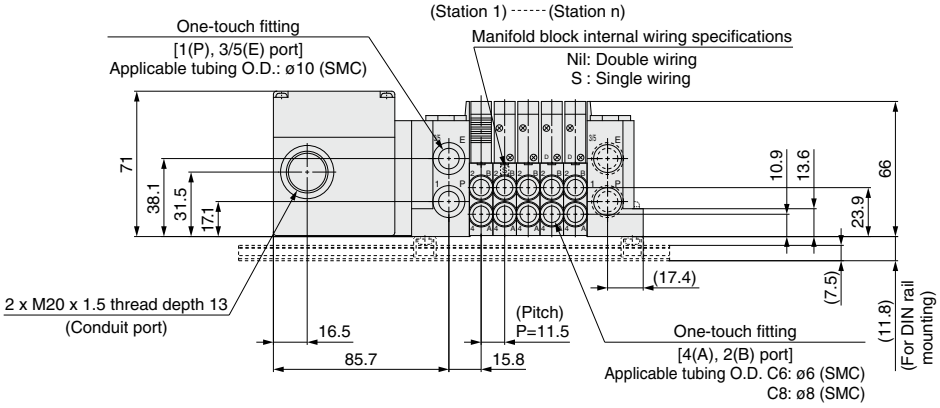

∗ These figures show the "JJ5SY3-10TC-05D-C8."
∗ Refer to page 90 for dimensions of external pilot (Made to Order) and silencer.

L: Dimensions

n: Stations

L \ n	2	3	4	5	6	7	8	9	10	11	12	13	14	15	16
L1	146.1	157.6	169.1	180.6	192.1	203.6	215.1	226.6	238.1	249.6	261.1	272.6	284.1	295.6	307.1
L2	66.1	77.6	89.1	100.6	112.1	123.6	135.1	146.6	158.1	169.6	181.1	192.6	204.1	215.6	227.1
L3	173	185.5	198	210.5	223	235.5	248	260.5	273	273	285.5	298	310.5	323	335.5
L4	162.5	175	187.5	200	212.5	225	237.5	250	262.5	262.5	275	287.5	300	312.5	325
L5	13.5	14	14.5	15	15.5	16	16.5	17	17.5	11.5	12	12.5	13	13.5	14

L \ n	17	18	19	20	21	22	23	24
L1	318.6	330.1	341.6	353.1	364.6	376.1	387.6	399.1
L2	238.6	250.1	261.6	273.1	284.6	296.1	307.6	319.1
L3	348	360.5	373	385.5	398	410.5	423	423
L4	337.5	350	362.5	375	387.5	400	412.5	412.5
L5	14.5	15	15.5	16	16.5	17	17.5	12

Dimensions: JSY5000 Series

Type 10/Side Ported
Spring Type Terminal Block Box

JJ5SY5-10TC-Stations U/D/B-C10/C12(D)

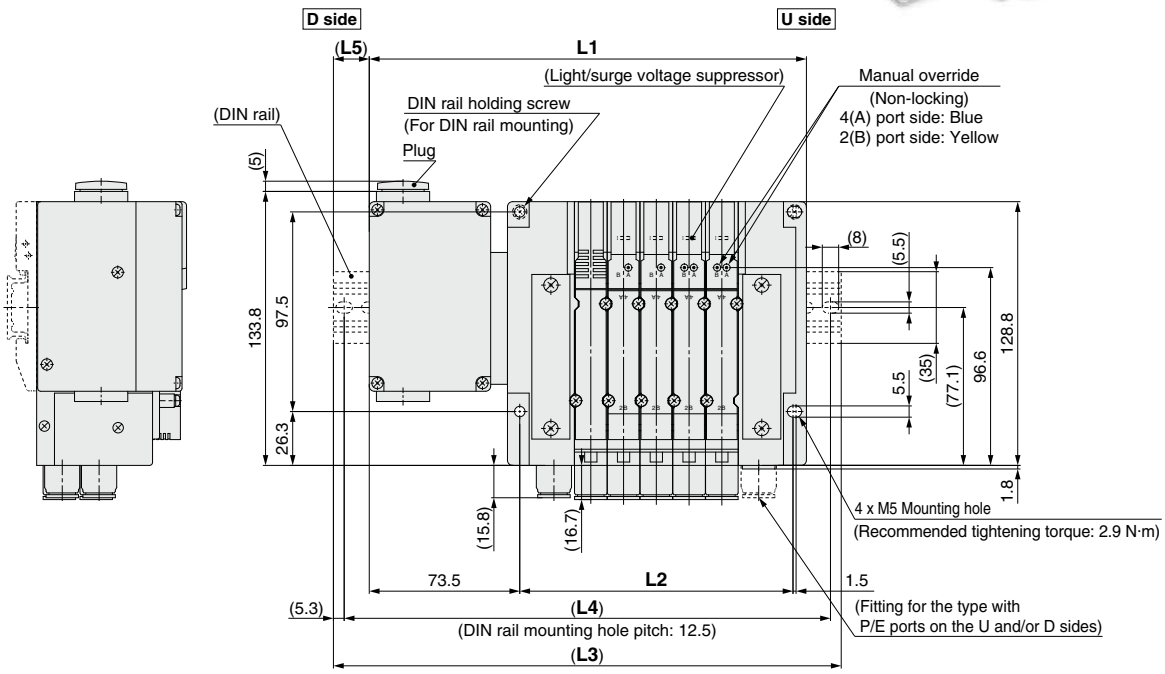

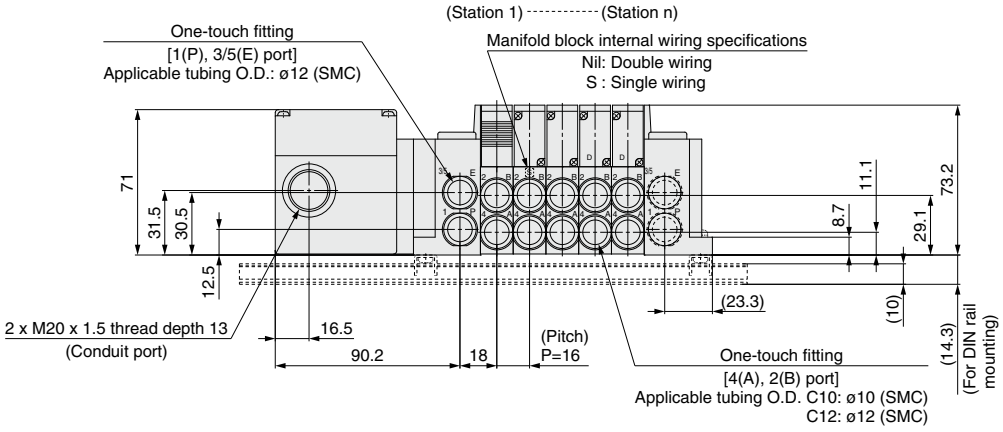

∗ These figures show the "JJ5SY5-10TC-05D-C12."
∗ Refer to page 91 for dimensions of external pilot (Made to Order) and silencer.

L: Dimensions

n: Stations

L \ n	2	3	4	5	6	7	8	9	10	11	12	13	14	15	16
L1	165.5	181.5	197.5	213.5	229.5	245.5	261.5	277.5	293.5	309.5	325.5	341.5	357.5	373.5	389.5
L2	85.5	101.5	117.5	133.5	149.5	165.5	181.5	197.5	213.5	229.5	245.5	261.5	277.5	293.5	309.5
L3	198	210.5	223	248	260.5	273	285.5	310.5	323	335.5	360.5	373	385.5	398	423
L4	187.5	200	212.5	237.5	250	262.5	275	300	312.5	325	350	362.5	375	387.5	412.5
L5	16.5	14.5	13	17.5	15.5	14	12	16.5	15	13	17.5	16	14	12.5	17

L \ n	17	18	19	20	21	22	23	24
L1	405.5	421.5	437.5	453.5	469.5	485.5	501.5	517.5
L2	325.5	341.5	357.5	373.5	389.5	405.5	421.5	437.5
L3	435.5	448	473	485.5	498	510.5	535.5	548
L4	425	437.5	462.5	475	487.5	500	525	537.5
L5	15	13.5	18	16	14.5	12.5	17	15.5

Dimensions: JSY1000 Series

Type 10/Side Ported (Applicable to ø2 and ø4 fittings)
Terminal Block Box

JJ5SY1-10T-Stations U/D/B-C2/C4(D)

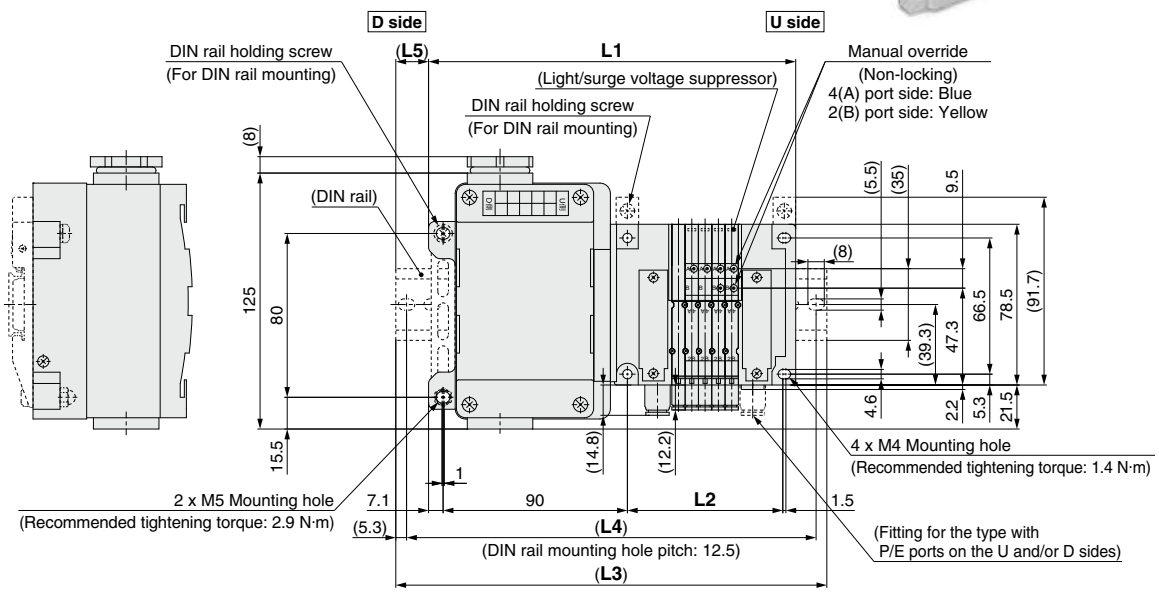

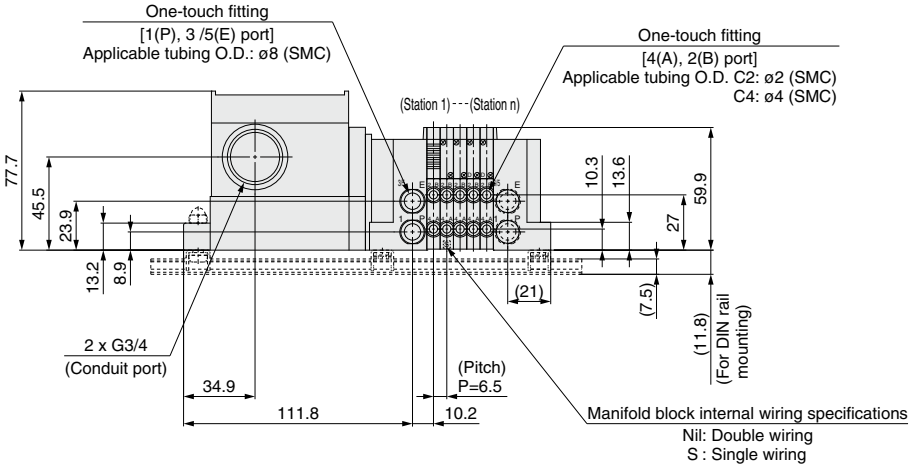

∗ These figures show the "JJ5SY1-10T-05D-C4."
∗ Refer to page 89 for dimensions of external pilot (Made to Order) and silencer.
∗ When CM is selected for mixed A, B port size and C6 (9 mm pitch) is included, refer to page 92 for dimensions.

L: Dimensions

n: Stations

L \ n	2	3	4	5	6	7	8	9	10	11	12	13	14	15	16
L1	159.8	166.3	172.8	179.3	185.8	192.3	198.8	205.3	211.8	218.3	224.8	231.3	237.8	244.3	250.8
L2	56.4	62.9	69.4	75.9	82.4	88.9	95.4	101.9	108.4	114.9	121.4	127.9	134.4	140.9	147.4
L3	185.5	198	198	210.5	210.5	223	223	235.5	235.5	248	248	260.5	273	273	285.5
L4	175	187.5	187.5	200	200	212.5	212.5	225	225	237.5	237.5	250	262.5	262.5	275
L5	13	16	13	16	13	16	12	15	12	15	12	15	18	15	18

L \ n	17	18	19	20
L1	257.3	263.8	270.3	276.8
L2	153.9	160.4	166.9	173.4
L3	285.5	298	298	310.5
L4	275	287.5	287.5	300
L5	14	17	14	17

Dimensions: JSY1000 Series

Type 10/Side Ported (Applicable to ø6 fittings)
Terminal Block Box

JJ5SY1-10T-Stations U/D/B-C6(D)

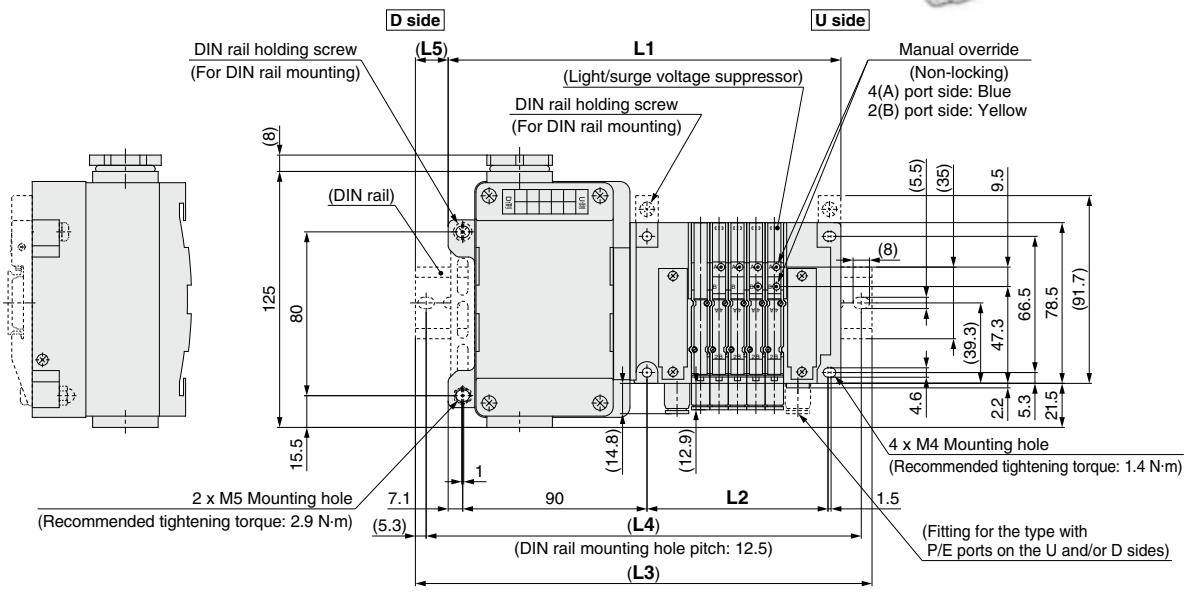

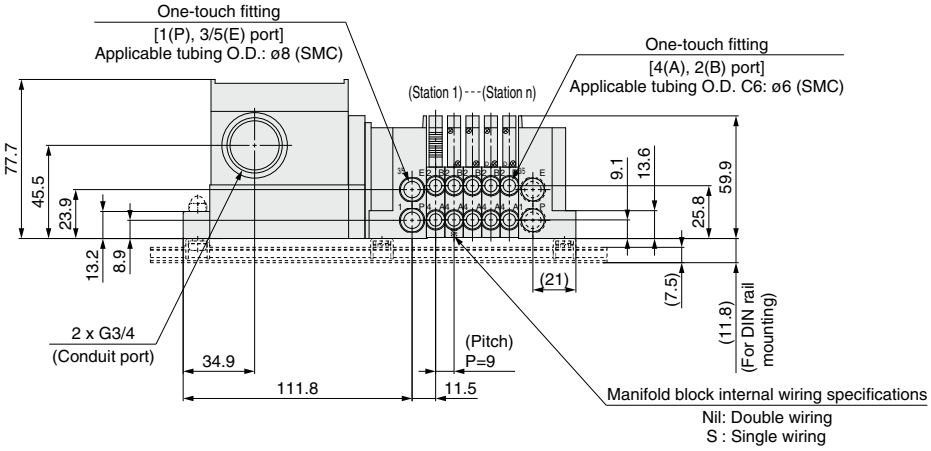

∗ These figures show the "JJ5SY1-10T-05D-C6."
∗ Refer to page 89 for dimensions of external pilot (Made to Order) and silencer.
∗ When CM is selected for mixed A, B port size, refer to page 92 for dimensions.

L: Dimensions

n: Stations

L \ n	2	3	4	5	6	7	8	9	10	11	12	13	14	15	16
L1	164.8	173.8	182.8	191.8	200.8	209.8	218.8	227.8	236.8	245.8	254.8	263.8	272.8	281.8	290.8
L2	61.4	70.4	79.4	88.4	97.4	106.4	115.4	124.4	133.4	142.4	151.4	160.4	169.4	178.4	187.4
L3	198	198	210.5	223	235.5	235.5	248	260.5	260.5	273	285.5	298	298	310.5	323
L4	187.5	187.5	200	212.5	225	225	237.5	250	250	262.5	275	287.5	287.5	300	312.5
L5	17	12	14	16	18	13	15	17	12	14	16	17	13	15	16

L \ n	17	18	19	20
L1	299.8	308.8	317.8	326.8
L2	196.4	205.4	214.4	223.4
L3	323	335.5	348	360.5
L4	312.5	325	337.5	350
L5	12	14	15	17

Dimensions: JSY3000 Series

Type 10/Side Ported
Terminal Block Box

JJ5SY3-10T-Stations U/D/B - C6/C8 (D)

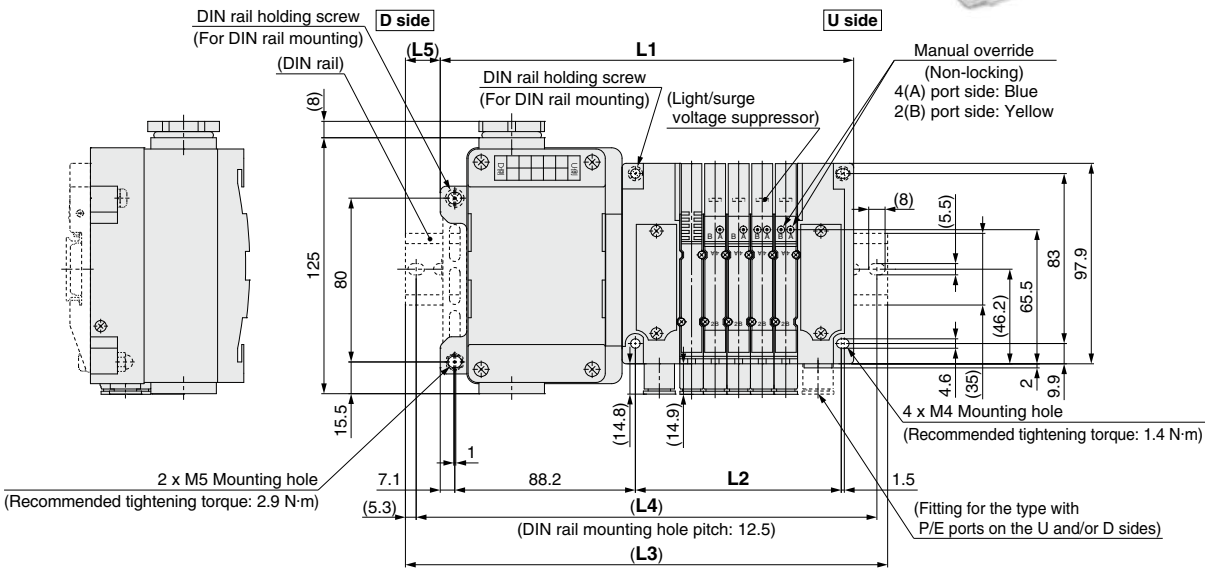

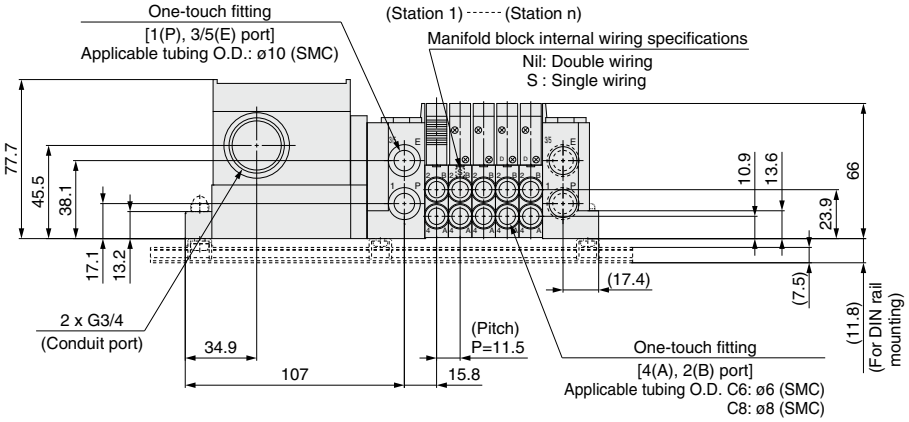

∗ These figures show the "JJ5SY3-10T-05D-C8."
∗ Refer to page 90 for dimensions of external pilot (Made to Order) and silencer.

L: Dimensions

n: Stations

L \ n	2	3	4	5	6	7	8	9	10	11	12	13	14	15	16
L1	167.4	178.9	190.4	201.9	213.4	224.9	236.4	247.9	259.4	270.9	282.4	293.9	305.4	316.9	328.4
L2	66.1	77.6	89.1	100.6	112.1	123.6	135.1	146.6	158.1	169.6	181.1	192.6	204.1	215.6	227.1
L3	198	210.5	223	235.5	248	248	260.5	273	285.5	298	310.5	323	335.5	348	360.5
L4	187.5	200	212.5	225	237.5	237.5	250	262.5	275	287.5	300	312.5	325	337.5	350
L5	16	16	17	17	18	12	12	13	13	14	14	15	15	16	16

L \ n	17	18	19	20
L1	339.9	351.4	362.9	374.4
L2	238.6	250.1	261.6	273.1
L3	373	385.5	398	398
L4	362.5	375	387.5	387.5
L5	17	17	18	12

Dimensions: JSY5000 Series

Type 10/Side Ported
Terminal Block Box

JJ5SY5-10T-Stations U/D/B-C10/C12(D)

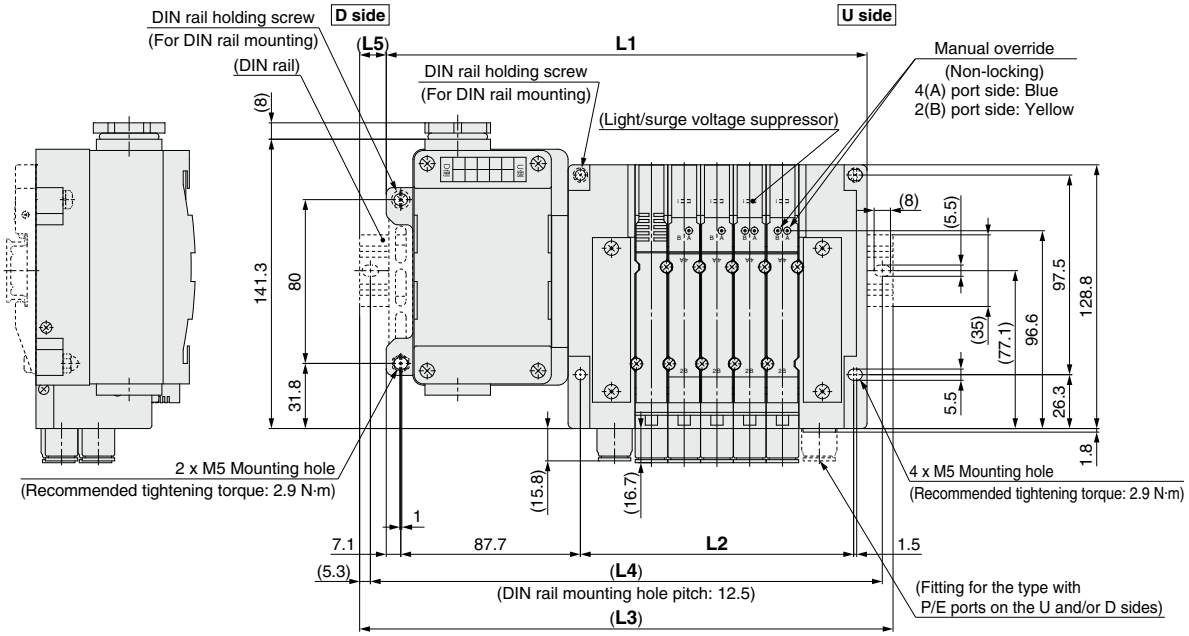

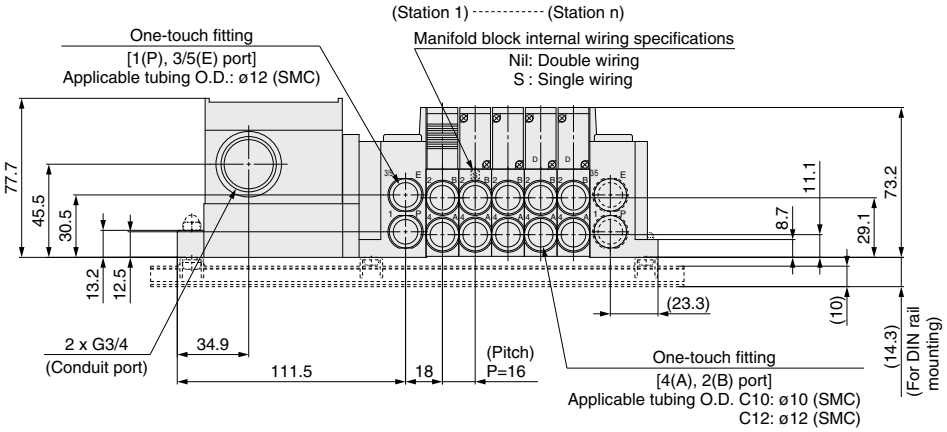

∗ These figures show the "JJ5SY5-10T-05D-C12."
∗ Refer to page 91 for dimensions of external pilot (Made to Order) and silencer.

L: Dimensions

n: Stations

L \ n	2	3	4	5	6	7	8	9	10	11	12	13	14	15	16
L1	186.8	202.8	218.8	234.8	250.8	266.8	282.8	298.8	314.8	330.8	346.8	362.8	378.8	394.8	410.8
L2	85.5	101.5	117.5	133.5	149.5	165.5	181.5	197.5	213.5	229.5	245.5	261.5	277.5	293.5	309.5
L3	210.5	235.5	248	260.5	285.5	298	310.5	323	348	360.5	373	398	410.5	423	435.5
L4	200	225	237.5	250	275	287.5	300	312.5	337.5	350	362.5	387.5	400	412.5	425
L5	12	16.5	14.5	13	17.5	15.5	14	12	16.5	15	13	17.5	16	14	12.5

L \ n	17	18	19	20
L1	426.8	442.8	458.8	474.8
L2	325.5	341.5	357.5	373.5
L3	460.5	473	485.5	498
L4	450	462.5	475	487.5
L5	17	15	13.5	11.5

Spring Type Terminal Block "TC" Connection

Step 1. Remove the terminal block cover.
Loosen the 4 mounting screws (M3) to remove the terminal block cover.

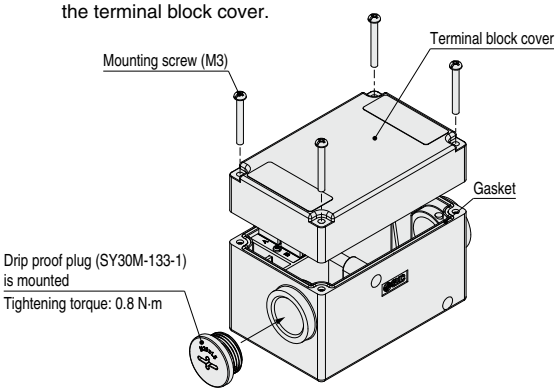

Step 2. The diagram below shows the terminal block wiring. All stations are provided with double wiring regardless of the mounted valves.
Connect each wire to the power supply side, according to the markings provided inside the terminal block. Be sure to connect the wire with the push button pressed down.

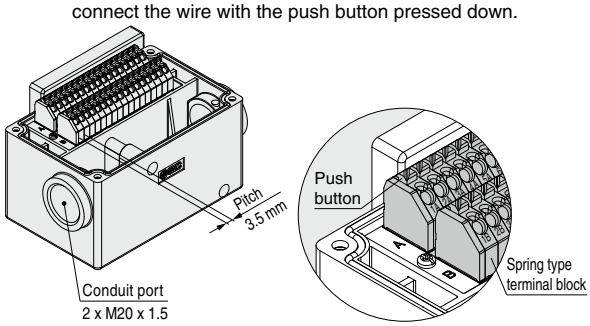

Step 3. Mount the terminal block cover.
Securely tighten the mounting screws (M3) to the torque shown below only after confirming that the gasket is installed correctly.

Proper tightening torque [N·m]
0.54 to 0.66

• Applicable wire range: Conductor diameter ø0.5 to ø1.2 mm, Stranded wire AWG24 to 16

Electrical Wiring Specifications (IP67 compliant)

Standard wiring

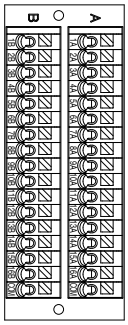

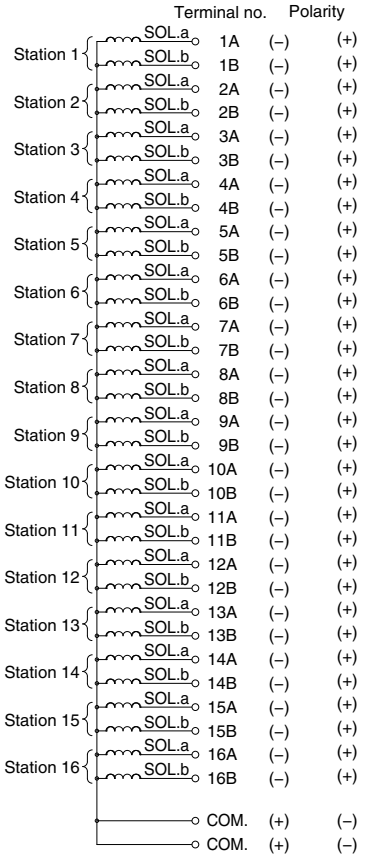

If alignment is not specified, the internal wiring will be double wiring (connected to SOL. a and SOL. b) regardless of number of stations, valve types, and option types.

* When using a valve with no polarity, either positive common or negative common can be used.

Specified Layout

A mixture of single and double wiring can be specified on the manifold specification sheet. The maximum number of stations is determined according to the number of solenoids. The total number of solenoids should be 32 or less. 1 solenoid is required for the 2-position single, and 2 solenoids for the 2-position double, 3-position, and 4-position.

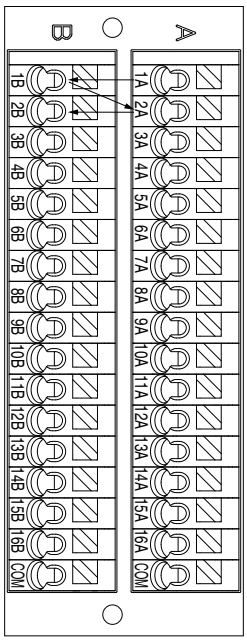

Terminal Block "T" Connection

Step 1. Remove the terminal block cover.
Loosen the 4 mounting screws (M4) to remove the terminal block cover.

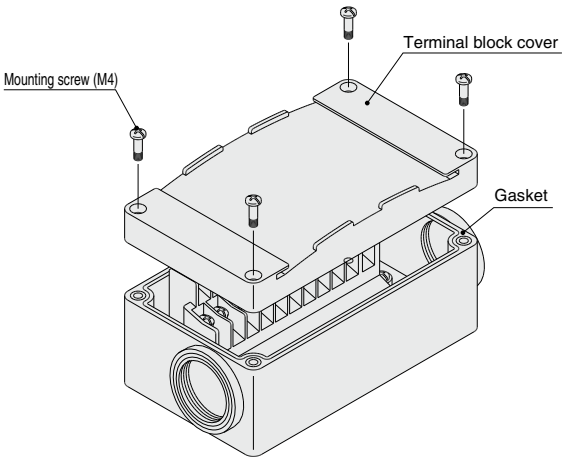

Step 2. The diagram below shows the terminal block wiring. All stations are provided with double wiring regardless of the mounted valves.
Connect each wire to the power supply side, according to the markings provided inside the terminal block.

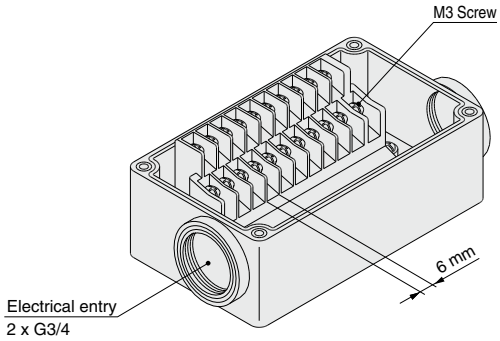

Step 3. Mount the terminal block cover.
Securely tighten the screws to the torque shown below only after confirming that the gasket is installed correctly.

Proper tightening torque [N·m]
0.7 to 1.2

- Applicable crimped terminal: 1.25-3S, 1.25Y-3, 1.25Y-3N, 1.25Y-3.5
- Name plate: VVQ5000-N-T
- Drip proof plug assembly (for G3/4): AXT100-B06A

Electrical Wiring Specifications (IP67 compliant)

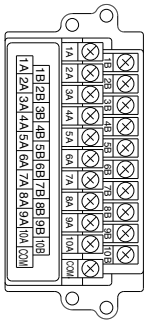

If alignment is not specified, the internal wiring is double wiring (connected to SOL. a and SOL. b) regardless of number of stations, valve and option types.

∗ When using a valve with no polarity, either positive common or negative common can be used.

Standard wiring

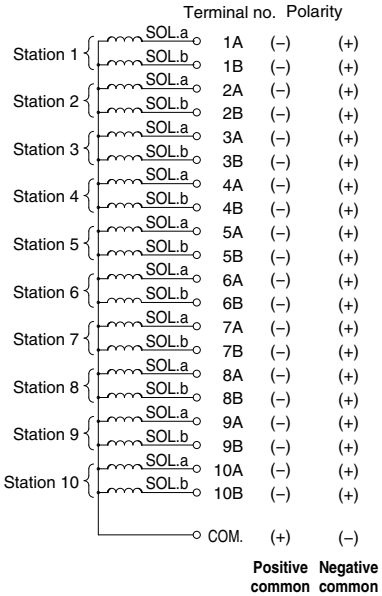

Specified Layout

Mixed wiring of single and double wiring can be specified on the manifold specification sheet. The maximum number of stations is determined according to the number of solenoids. The total number of solenoids should be 20 or less. 1 solenoid is required for 2-position single, and 2 solenoids for 2-position double, 3-position and 4-position.

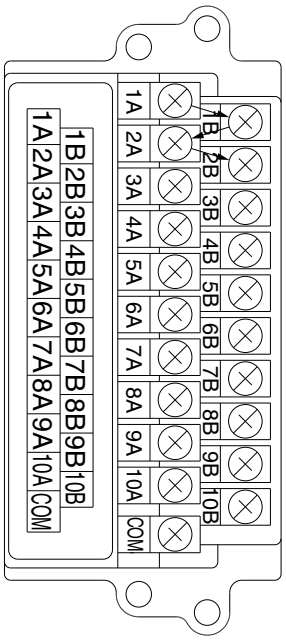

Plug-in Connector Connecting Base

Lead Wire

Type 10
Side Ported

JSY1000/3000/5000 Series

CE RoHS

Internal Pilot

How to Order Manifolds

JJ5SY 3 – 10 L1 1 – 05 U □ – C6 □

❶ ❷ ❸ ❹ ❺ ❻ ❼ ❽ ❾

Made to Order
(Refer to page 114 for details.)

Specification
External pilot (SUP/EXH block assembly)

❶ Series

1	JSY1000
3	JSY3000
5	JSY5000

❷ Type

10	Side ported

❸ Number of cores (Lead wire)

L1	34 cores
L2	17 cores
L3	9 cores

❹ Lead wire length

1	0.6 m
2	1.5 m
3	3 m

❺ Valve stations

L1□: 34 cores

Symbol	Stations	Note
02	2 stations	Double wiring*1
⋮	⋮	
16	16 stations	
02	2 stations	Specified layout*2 (Up to 32 solenoids available)
⋮	⋮	
24	24 stations	

L2□: 17 cores

Symbol	Stations	Note
02	2 stations	Double wiring*1
⋮	⋮	
08	8 stations	
02	2 stations	Specified layout*2 (Up to 16 solenoids available)
⋮	⋮	
16	16 stations	

L3□: 9 cores

Symbol	Stations	Note
02	2 stations	Double wiring*1
⋮	⋮	
4	4 stations	
02	2 stations	Specified layout*2 (Up to 8 solenoids available)
⋮	⋮	
08	8 stations	

*1 Double wiring: 2-position single, double, 3-position, and 4-position valves can be used on all manifold stations.
Use of a 2-position single solenoid will result in an unused control signal. If this is not desired, order with a specified layout.
*2 Specified layout: Indicate the wiring specifications on the manifold specification sheet. (Note that 2-position double, 3-position, and 4-position valves cannot be used where single wiring has been specified.)
*3 This also includes the number of blanking plates.

❻ P, E port entry

U	U side (2 to 10 stations)
D	D side (2 to 10 stations)
B	Both sides (2 to 24 stations)

❼ SUP/EXH block assembly

Nil	Internal pilot
S	Internal pilot, Built-in silencer

* 3/5(E) port is plugged for the built-in silencer type.
* When the built-in silencer type is used, keep the exhaust port from coming in direct contact with water or other liquids.
* The external pilot specification should be ordered as Made to Order. For details, refer to page 114.

❽ A, B port size (Metric/One-touch fitting)

Symbol	A, B port		JSY1000	JSY3000	JSY5000
C2	Straight	ø2	●	—	—
C4		ø4	●	—	—
C6		ø6	●	●	—
C8		ø8	—	●	—
C10		ø10	—	—	●
C12		ø12	—	—	●
CM*1		Straight port, mixed sizes	●	●	●
P, E port size (One-touch fittings)			ø8	ø10	ø12

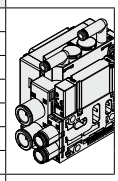

*1 Indicate the sizes on the manifold specification sheet in the case of "CM."
* The JSY1000 manifold pitch for C2 and C4 is 6.5 mm, and 9 mm for C6. When CM is selected, the manifold pitch is different depending on the selected fitting.

❾ Mounting and Option

Symbol	Mounting
Nil	Direct mounting
D□	DIN rail mounting

* Enter the number of stations inside □ when it is larger than the number of valve stations. (Refer to "DIN Rail Option" shown below.)
* Refer to page 118 for the fixation of DIN rail mounting type manifold.

DIN Rail Option

Nil	DIN rail mounting (With DIN rail)	
0	DIN rail mounting (Without DIN rail)	
3	For 3 stations	Specify a longer rail than the standard length.
⋮	⋮	
24	For 24 stations	

How to Order Manifold Assembly

Example (JJ5SY3-10L11-□)

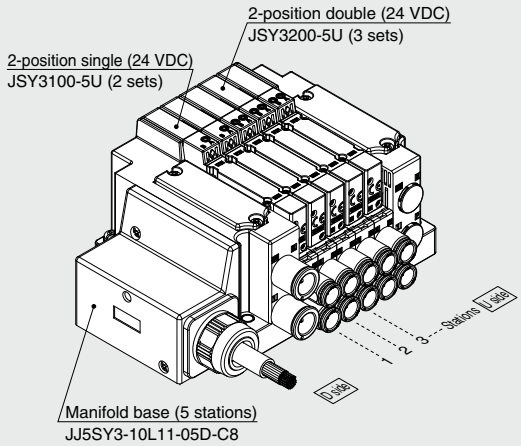

JJ5SY3-10L11-05D-C8·· 1 set (Type 10 5-station manifold base part no.)
∗ JSY3100-5U····· 2 sets (2-position single part no.)
∗ JSY3200-5U····· 3 sets (2-position double part no.)
→The asterisk denotes the symbol for the assembly. Prefix it to the part numbers of the valve, etc.

· The valve arrangement is numbered as the 1st station from the D side.
· Under the manifold part number, state the valves to be mounted in order from the 1st station as shown in the figure. If the arrangement becomes complicated, specify on a manifold specification sheet.

Internal Pilot

How to Order Valves (With mounting screw)

Refer to page 11 for valve specifications.

JSY1000 Series JSY 1 1 0 0 T – 5 Z □

JSY3000/5000 Series JSY 3 1 0 0 – 5 Z □

❶ ❷ ❸ ❹ ❺ ❻

● With power saving circuit
● Base mounted

Made to Order (Refer to page 114 for details.)

Specification
With power saving circuit (Continuous duty type): 0.1 W (JSY3000/5000)
External pilot

❶ Series

1	JSY1000
3	JSY3000
5	JSY5000

❸ Pilot valve exhaust method

0	Pilot valve individual exhaust

❹ Rated voltage

5	24 VDC

⚠ Caution

If the JSY3000/5000 series will be continuously energized, please be sure to use the power saving circuit (continuous duty type). Refer to Made to Order on page 114. Additionally, when it is used at the energizing rate over 50%, please select the product with power saving circuit.
For the JSY1000 series only the power saving circuit is available.

❷ Type of actuation

1	2-position	Single
2		Double
3	3-position	Closed center
4		Exhaust center
5		Pressure center
A	4-position dual 3-port	N.C./N.C.
B		N.O./N.O.
C		N.C./N.O.

❺ Light/surge voltage suppressor and common specification

Symbol	With light	Surge voltage suppressor	Common specification
U	●	●	Non-polar
Z			Positive common
NZ			Negative common

∗ Only "Z" and "NZ" types are available for the JSY1000 series.
∗ When non-polar common specification type is selected, take measures to prevent surge voltage. For details, refer to page 117.

❻ Manual override

Nil: Non-locking push type

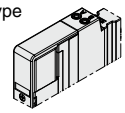

D: Push-turn locking slotted type

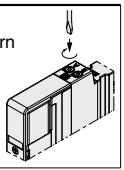

E: Push-turn locking lever type

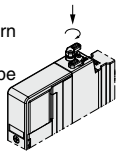

∗ Push-turn locking lever type "E" is not available for the JSY1000.

∗ **When ordering a valve individually, the base gasket is not included.**
Since the base gasket is attached to the manifold, please order the base gasket separately if it is needed for maintenance service.
Refer to page 107 for base gasket and mounting screw part numbers.

⚠ Protective class class Ⅲ (Mark: Ⅲ)

Dimensions: JSY1000 Series

Type 10/Side Ported (Applicable to ø2 and ø4 fittings)
Lead Wire

JJ5SY1-10L$^{1}_{2}_{3}$□-Stations$^{U}_{D}_{B}$-$^{C2}_{C4}$(D)

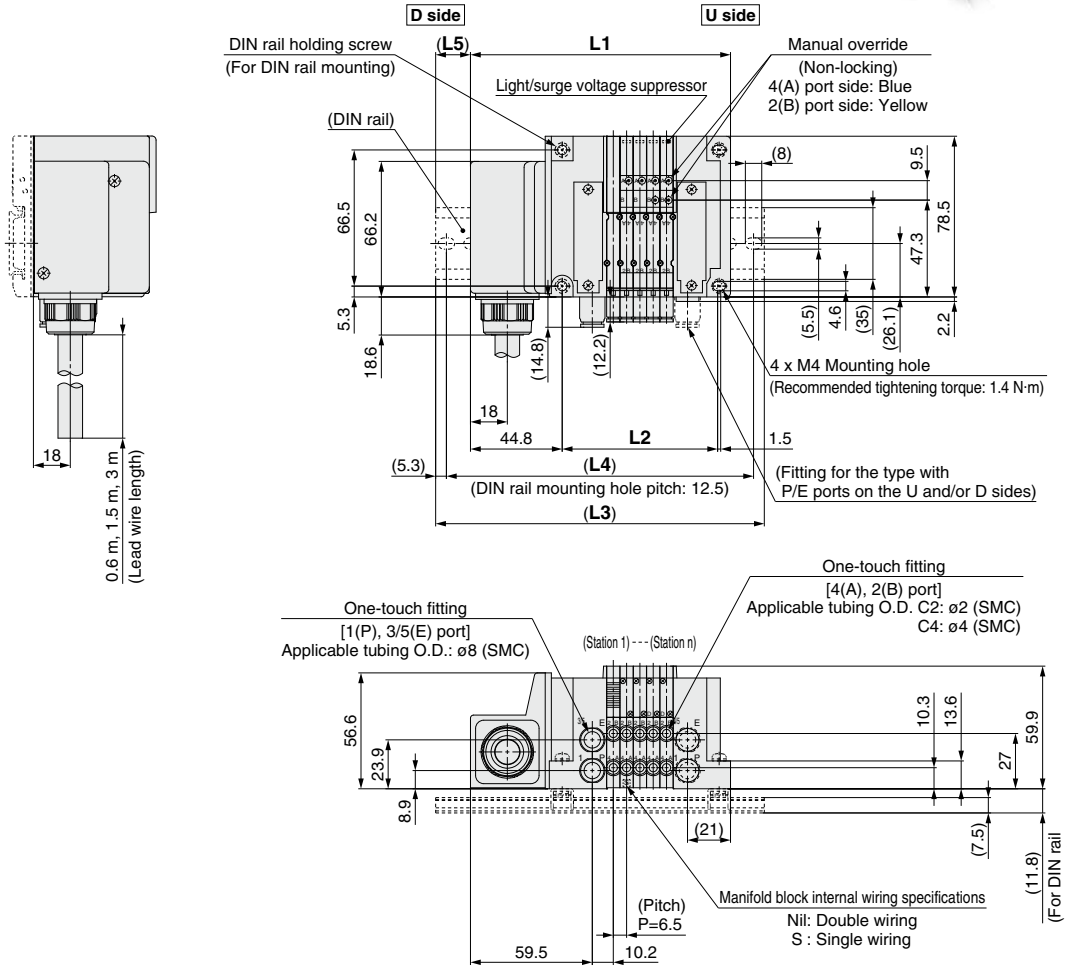

∗ These figures show the "JJ5SY1-10L1□-05D-C4."
∗ Refer to page 89 for dimensions of external pilot (Made to Order) and silencer.
∗ When CM is selected for mixed A, B port size and C6 (9 mm pitch) is included, refer to page 92 for dimensions.

L: Dimensions

n: Stations

L \ n	2	3	4	5	6	7	8	9	10	11	12	13	14	15	16
L1	107.5	114	120.5	127	133.5	140	146.5	153	159.5	166	172.5	179	185.5	192	198.5
L2	56.4	62.9	69.4	75.9	82.4	88.9	95.4	101.9	108.4	114.9	121.4	127.9	134.4	140.9	147.4
L3	135.5	148	148	160.5	160.5	173	173	185.5	185.5	198	198	210.5	210.5	223	223
L4	125	137.5	137.5	150	150	162.5	162.5	175	175	187.5	187.5	200	200	212.5	212.5
L5	14	17	14	17	13.5	16.5	13.5	16.5	13	16	13	16	12.5	15.5	12.5

L \ n	17	18	19	20	21	22	23	24
L1	205	211.5	218	224.5	231	237.5	244	250.5
L2	153.9	160.4	166.9	173.4	179.9	186.4	192.9	199.4
L3	235.5	235.5	248	248	260.5	273	273	285.5
L4	225	225	237.5	237.5	250	262.5	262.5	275
L5	15.5	12	15	12	15	18	14.5	17.5

Type 10/Side Ported (Applicable to ø6 fittings)
Lead Wire

Dimensions: JSY1000 Series

JJ5SY1-10L$^{1}_{2}_{3}$□-Stations$^{U}_{D}_{B}$-C6(D)

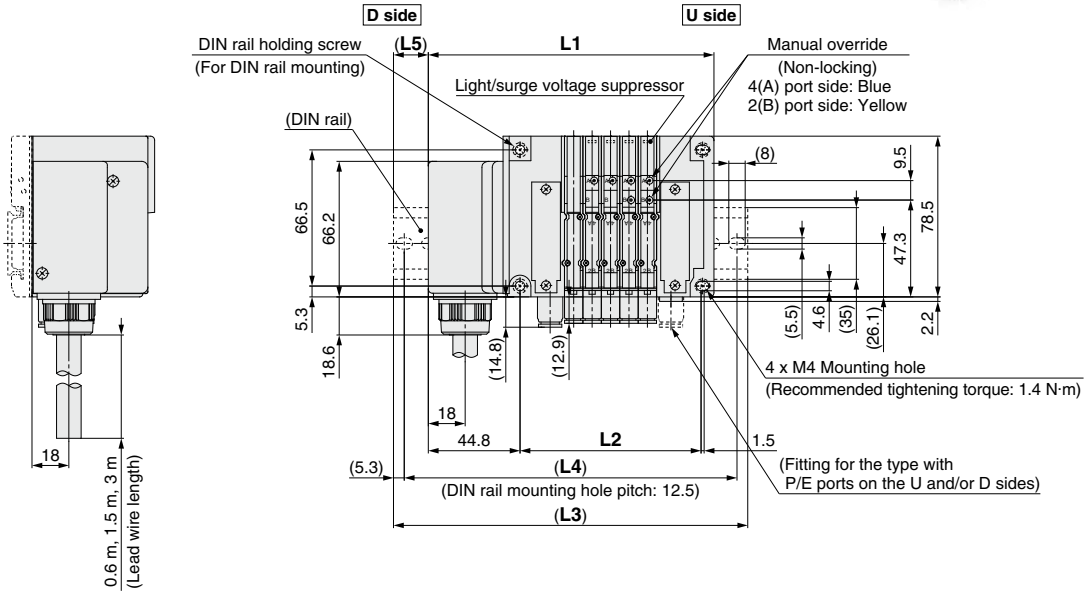

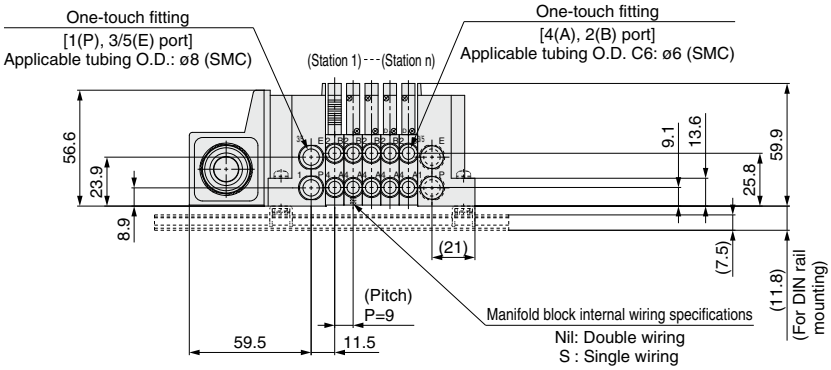

∗ These figures show the "JJ5SY1-10L1□-05D-C6."
∗ Refer to page 89 for dimensions of external pilot (Made to Order) and silencer.
∗ When CM is selected for mixed A, B port size, refer to page 92 for dimensions.

L: Dimensions

n: Stations

L \ n	2	3	4	5	6	7	8	9	10	11	12	13	14	15	16
L1	112.5	121.5	130.5	139.5	148.5	157.5	166.5	175.5	184.5	193.5	202.5	211.5	220.5	229.5	238.5
L2	61.4	70.4	79.4	88.4	97.4	106.4	115.4	124.4	133.4	142.4	151.4	160.4	169.4	178.4	187.4
L3	148	148	160.5	173	173	185.5	198	210.5	210.5	223	235.5	235.5	248	260.5	273
L4	137.5	137.5	150	162.5	162.5	175	187.5	200	200	212.5	225	225	237.5	250	262.5
L5	18	13.5	15	17	12.5	14	16	17.5	13	15	16.5	12	14	15.5	17.5

L \ n	17	18	19	20	21	22	23	24
L1	247.5	256.5	265.5	274.5	283.5	292.5	301.5	310.5
L2	196.4	205.4	214.4	223.4	232.4	241.4	250.4	259.4
L3	273	285.5	298	298	310.5	323	335.5	335.5
L4	262.5	275	287.5	287.5	300	312.5	325	325
L5	13	14.5	16.5	12	13.5	15.5	17	12.5

Dimensions: JSY3000 Series

Type 10/Side Ported
Lead Wire

JJ5SY3-10L$^{1}_{2}_{3}$□-Stations$^{U}_{D}_{B}$-$^{C6}_{C8}$(D)

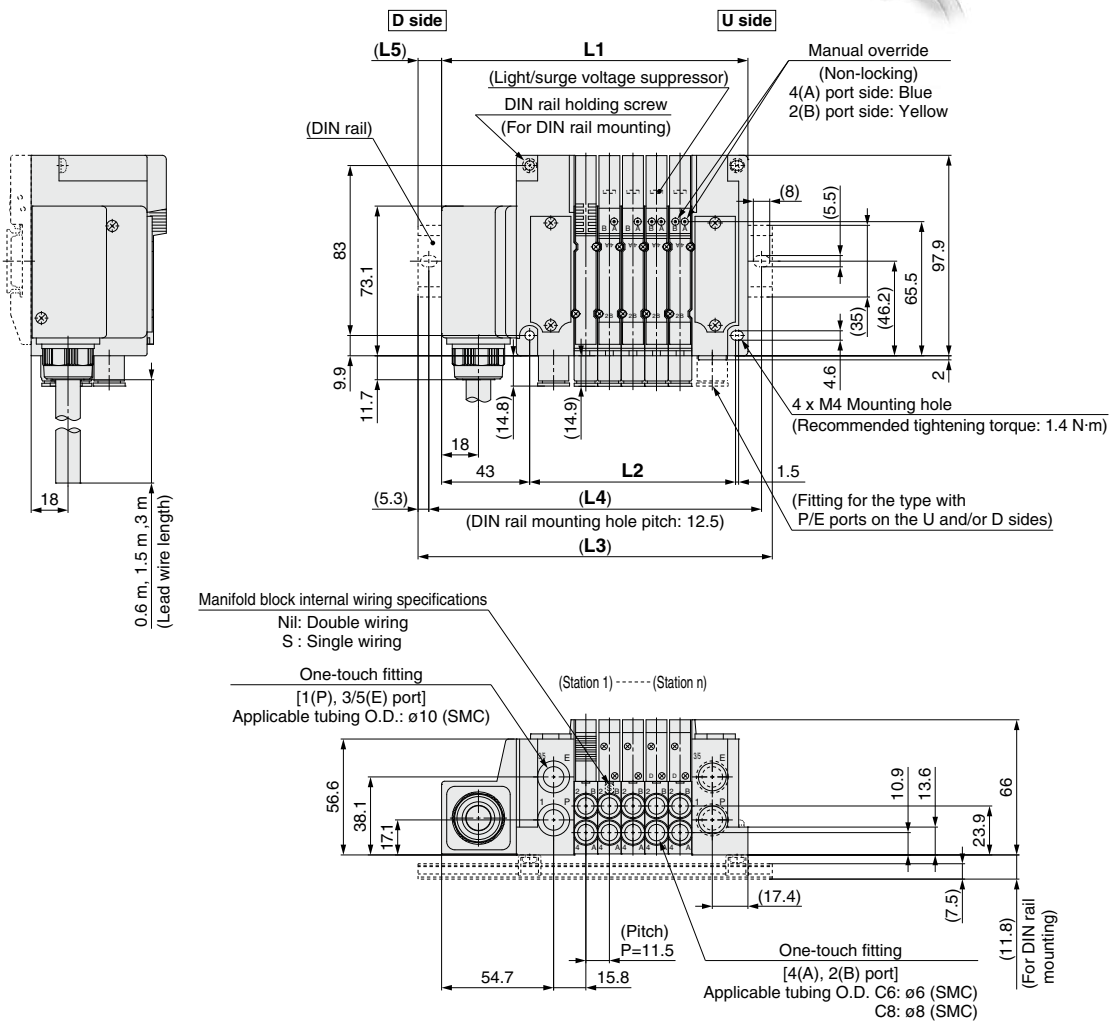

∗ These figures show the "JJ5SY3-10L1□-05D-C8."
∗ Refer to page 90 for dimensions of external pilot (Made to Order) and silencer.

L: Dimensions

n: Stations

L \ n	2	3	4	5	6	7	8	9	10	11	12	13	14	15	16
L1	115.1	126.6	138.1	149.6	161.1	172.6	184.1	195.6	207.1	218.6	230.1	241.6	253.1	264.6	276.1
L2	66.1	77.6	89.1	100.6	112.1	123.6	135.1	146.6	158.1	169.6	181.1	192.6	204.1	215.6	227.1
L3	148	160.5	173	173	185.5	198	210.5	223	235.5	248	260.5	273	285.5	298	310.5
L4	137.5	150	162.5	162.5	175	187.5	200	212.5	225	237.5	250	262.5	275	287.5	300
L5	16.5	17	17.5	11.5	12	12.5	13	13.5	14	14.5	15	15.5	16	16.5	17

L \ n	17	18	19	20	21	22	23	24
L1	287.6	299.1	310.6	322.1	333.6	345.1	356.6	368.1
L2	238.6	250.1	261.6	273.1	284.6	296.1	307.6	319.1
L3	323	323	335.5	348	360.5	373	385.5	398
L4	312.5	312.5	325	337.5	350	362.5	375	387.5
L5	17.5	12	12.5	13	13.5	14	14.5	15

Dimensions: JSY5000 Series

Type 10/Side Ported
Lead Wire

JJ5SY5-10L$^{1}_{2}_{3}$□-Stations$^{U}_{D}_{B}$-$^{C10}_{C12}$(D)

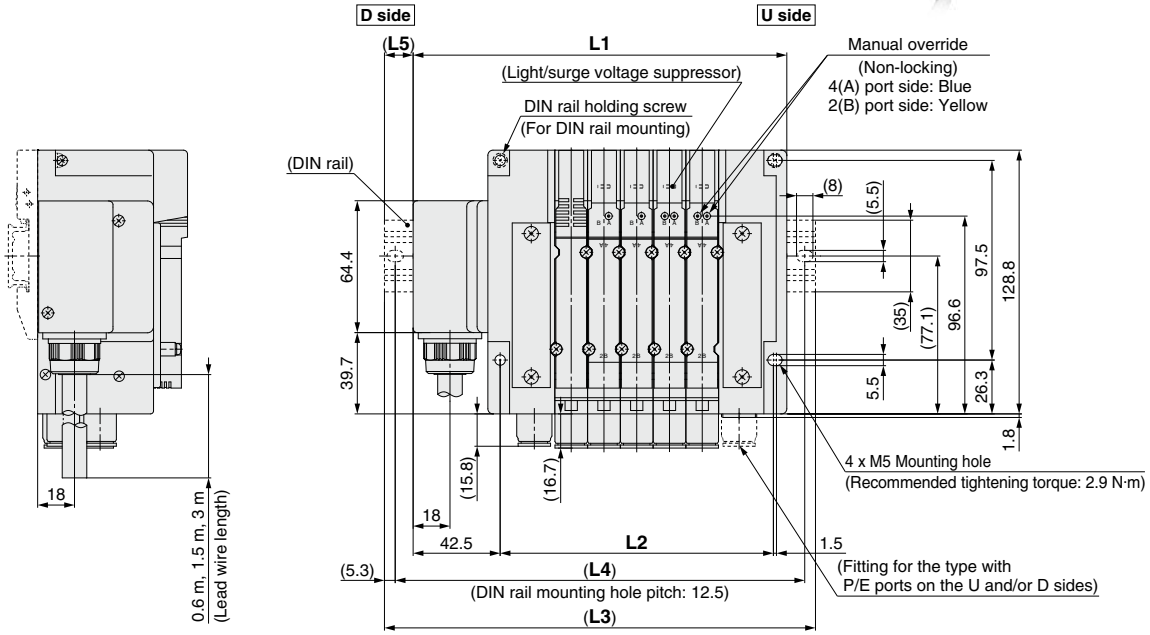

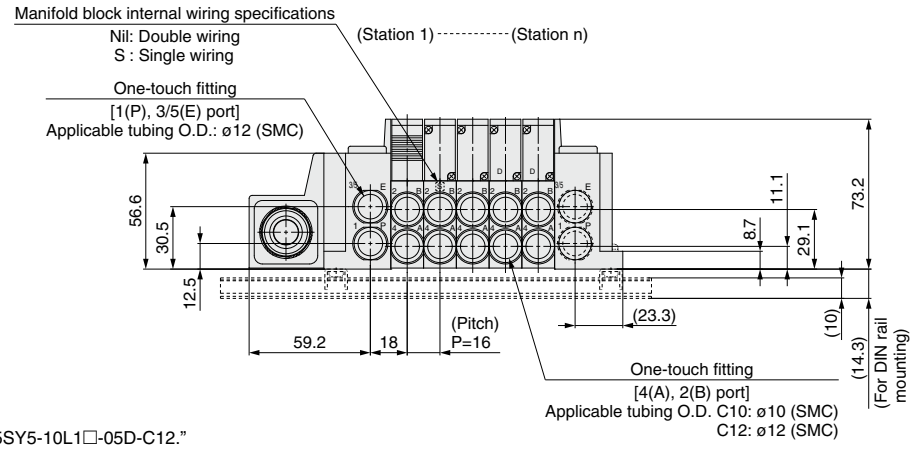

∗ These figures show the "JJ5SY5-10L1□-05D-C12."
∗ Refer to page 91 for dimensions of external pilot (Made to Order) and silencer.

L: Dimensions

n: Stations

L \ n	2	3	4	5	6	7	8	9	10	11	12	13	14	15	16
L1	134.5	150.5	166.5	182.5	198.5	214.5	230.5	246.5	262.5	278.5	294.5	310.5	326.5	342.5	358.5
L2	85.5	101.5	117.5	133.5	149.5	165.5	181.5	197.5	213.5	229.5	245.5	261.5	277.5	293.5	309.5
L3	173	185.5	198	210.5	235.5	248	260.5	285.5	298	310.5	323	348	360.5	373	398
L4	162.5	175	187.5	200	225	237.5	250	275	287.5	300	312.5	337.5	350	362.5	387.5
L5	19.5	17.5	16	14	18.5	17	15	19.5	18	16	14.5	19	17	15.5	20

L \ n	17	18	19	20	21	22	23	24
L1	374.5	390.5	406.5	422.5	438.5	454.5	470.5	486.5
L2	325.5	341.5	357.5	373.5	389.5	405.5	421.5	437.5
L3	410.5	423	435.5	460.5	473	485.5	510.5	523
L4	400	412.5	425	450	462.5	475	500	512.5
L5	18	16.5	14.5	19	17.5	15.5	20	18.5

Electrical Wiring Specifications

Lead wire

34 cores

Lead wire
AWG26 (0.14 mm^2) x 34 cores

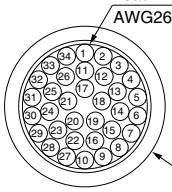

If alignment is not specified, the internal wiring is double wiring (connected to SOL. a and SOL. b) regardless of number of stations, valve and option types.

Sheath O.D.
Approx. ø8.8

		Lead wire no.	Polarity	
Station 1	SOL.a	1	(–)	(+)
	SOL.b	2	(–)	(+)
Station 2	SOL.a	3	(–)	(+)
	SOL.b	4	(–)	(+)
Station 3	SOL.a	5	(–)	(+)
	SOL.b	6	(–)	(+)
Station 4	SOL.a	7	(–)	(+)
	SOL.b	8	(–)	(+)
Station 5	SOL.a	9	(–)	(+)
	SOL.b	10	(–)	(+)
Station 6	SOL.a	11	(–)	(+)
	SOL.b	12	(–)	(+)
Station 7	SOL.a	13	(–)	(+)
	SOL.b	14	(–)	(+)
Station 8	SOL.a	15	(–)	(+)
	SOL.b	16	(–)	(+)
Station 9	SOL.a	17	(–)	(+)
	SOL.b	18	(–)	(+)
Station 10	SOL.a	19	(–)	(+)
	SOL.b	20	(–)	(+)
Station 11	SOL.a	21	(–)	(+)
	SOL.b	22	(–)	(+)
Station 12	SOL.a	23	(–)	(+)
	SOL.b	24	(–)	(+)
Station 13	SOL.a	25	(–)	(+)
	SOL.b	26	(–)	(+)
Station 14	SOL.a	27	(–)	(+)
	SOL.b	28	(–)	(+)
Station 15	SOL.a	29	(–)	(+)
	SOL.b	30	(–)	(+)
Station 16	SOL.a	31	(–)	(+)
	SOL.b	32	(–)	(+)
	COM.	33	(+)	(–)
	COM.	34	(+)	(–)
			Positive common	**Negative common**

Lead wire color	Printed mark (Both sides) Type	Color
Orange	–	Red
		Black
Light gray	–	Red
		Black
White	–	Red
		Black
Yellow	–	Red
		Black
Pink	–	Red
		Black
Orange	– –	Red
		Black
Light gray	– –	Red
		Black
White	– –	Red
		Black
Yellow	– –	Red
		Black
Pink	– –	Red
		Black
Orange	– – –	Red
		Black
Light gray	– – –	Red
		Black
White	– – –	Red
		Black
Yellow	– – –	Red
		Black
Pink	– – –	Red
		Black
Orange	– – – –	Red
		Black
Light gray	– – – –	Red
		Black

∗ For negative common specification, a valve for negative common or a valve without polarity should be used.

Electrical characteristics

Item	Property
Conductor resistance Ω/km, 20°C	143 or less
Voltage limit V, 1 minute, AC	2000
Insulation resistance MΩ/km, 20°C	10 or more

∗ Cannot be used for movable wiring. The minimum bending radius of the cable is 55 mm.

Specified Layout

Mixed wiring of single and double wiring can be specified on the manifold specification. The maximum number of stations is determined according to the number of solenoids. The total number of solenoids should be 32 or less. 1 solenoid is required for 2-position single, and 2 solenoids for 2-position double, 3-position and 4-position.

Electrical Wiring Specifications

Lead wire

17 cores

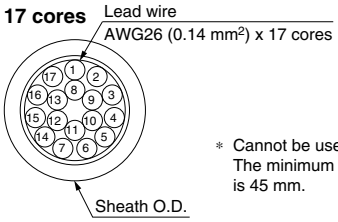

∗ Cannot be used for movable wiring.
The minimum bending radius of the cable is 45 mm.

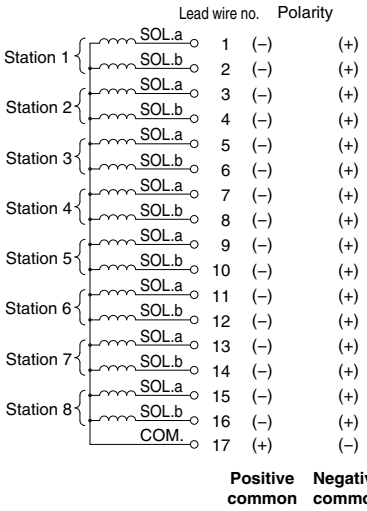

Lead wire color	Printed mark (Both sides)	
	Type	Color
Orange	–	Red
		Black
Light gray	–	Red
		Black
White	–	Red
		Black
Yellow	–	Red
		Black
Pink	–	Red
		Black
Orange	– –	Red
		Black
Light gray	– –	Red
		Black
White	– –	Red
		Black
Yellow	– –	Red

9 cores

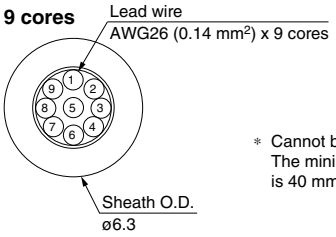

∗ Cannot be used for movable wiring.
The minimum bending radius of the cable is 40 mm.

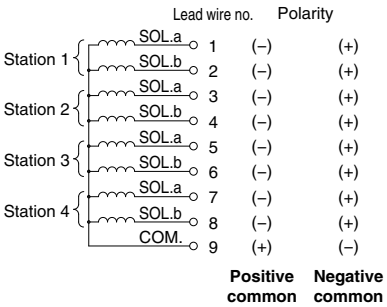

Lead wire color	Printed mark (Both sides)	
	Type	Color
Orange	–	Red
		Black
Light gray	–	Red
		Black
White	–	Red
		Black
Yellow	–	Red
		Black
Pink	–	Red

Electrical characteristics

Item	Property
Conductor resistance Ω/km, 20°C	143 or less
Voltage limit V, 1 minute, AC	2000
Insulation resistance MΩ/km, 20°C	10 or more

∗ For negative common specification, a valve for negative common or a valve without polarity should be used.

Plug-in Connector Connecting Base

EX600

Type 10
Side Ported

JSY1000/3000/5000 Series

CE RoHS

Internal Pilot

How to Order Manifolds

JJ5SY 3 – 10 S6 Q 2 2 – 05 U – C6 ☐

❶ ❷ ❸ ❹ ❺ ❻ ❼ ❽ ❾

Made to Order
(Refer to page 114 for details.)

Specification
External pilot (SUP/EXH block assembly)

❶ Series

1	JSY1000
3	JSY3000
5	JSY5000

❷ Type

10	Side ported

❸ SI unit

0	Without SI unit
Q	DeviceNet™ (Version A)
N	PROFIBUS DP (Version A)
V	CC-Link
ZE	EtherNet/IP™ (1 port)
EA	EtherNet/IP™ (2 ports)
D	EtherCAT
F	PROFINET
WE	EtherNet/IP™ compatible wireless master*1
WF	PROFINET compatible wireless master*1
WS	Wireless slave*1

*1 The wireless system is suitable for use only in a country where it is in accordance with the Radio Act and regulations of that country.
* I/O unit cannot be mounted without SI unit.
* Valve plate which connects manifold and SI unit is included, but it is not mounted to a valve without SI unit. Refer to the EX600 (page 101) for mounting.

❹ SI unit output polarity, End plate type

SI unit output polarity	Power supply with M12 connector	Power supply with 7/8 inch connector	Power supply with M12 connector: IN/OUT pin arrangement 1	Power supply with M12 connector: IN/OUT pin arrangement 2
Without SI unit	Nil			
SI unit positive common	2	3	6	8
SI unit negative common	4	5	7	9

* Ensure a match with the common specification of the valve to be used.
* Without SI unit, the symbol is nil.

❺ I/O unit stations

Nil	None
1	1 station
⋮	⋮
9	9 stations

* Without SI unit, the symbol is nil.
* SI unit is not included in I/O unit stations.
* When I/O unit is selected, it is shipped separately, and assembled by users. Refer to the attached operation manual for mounting.

❻ Valve stations

Symbol	Stations	Note
02	2 stations	Double wiring*1
⋮	⋮	
16	16 stations	
02	2 stations	Specified layout*2 (Up to 32 solenoids available)
⋮	⋮	
24	24 stations	

*1 Double wiring: 2-position single, double, 3-position, and 4-position valves can be used on all manifold stations. Use of a 2-position single solenoid will result in an unused control signal. If this is not desired, order with a specified layout.
*2 Specified layout: Indicate the wiring specifications on the manifold specification sheet. (Note that 2-position double, 3-position, and 4-position valves cannot be used where single wiring has been specified.)
* This also includes the number of blanking plates.

❼ P, E port entry, SUP/EXH block assembly

P, E port entry	Internal pilot	Internal pilot, Built-in silencer
U side (2 to 10 stations)	U	C
D side (2 to 10 stations)	D	E
Both sides (2 to 24 stations)	B	F

* 3/5(E) port is plugged for the built-in silencer type.
* When the built-in silencer type is used, keep the exhaust port from coming in direct contact with water or other liquids.
* The external pilot specification should be ordered as Made to Order. For details, refer to page 114.

❽ A, B port size (Metric/One-touch fitting)

Symbol	A, B port		JSY1000	JSY3000	JSY5000
C2	Straight	ø2	●	—	—
C4		ø4	●	—	—
C6		ø6	●	●	—
C8		ø8	—	●	—
C10		ø10	—	—	●
C12		ø12	—	—	●
CM*1		Straight port, mixed sizes	●	●	●
P, E port size (One-touch fittings)			ø8	ø10	ø12

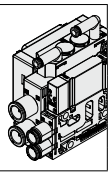

*1 Indicate the sizes on the manifold specification sheet in the case of "CM."
* The JSY1000 manifold pitch for C2 and C4 is 6.5 mm, and 9 mm for C6. When CM is selected, the manifold pitch is different depending on the selected fitting.

❾ Mounting and Option

Symbol	Mounting
Nil	Direct mounting
D☐	DIN rail mounting

* Enter the number of stations inside ☐ when it is larger than the number of valve stations. (Refer to "DIN Rail Option" shown below.)
* Refer to page 118 for the fixation of DIN rail mounting type manifold.

DIN Rail Option

Nil	DIN rail mounting (With DIN rail)	
0	DIN rail mounting (Without DIN rail)	
3	For 3 stations	Specify a longer rail than the standard length.
⋮	⋮	
24	For 24 stations	

* If the DIN rail must be mounted without an SI unit, select D0. Refer to L3 of the dimensions for the DIN rail length and order separately. (Refer to page 110 for the DIN rail part number.)

For details about the EX600 Integrated Type (For Input/Output) Serial Transmission System, refer to the Web Catalog and the Operation Manual. For details about part numbers of SI units to be mounted, refer to pages 101 and 102. (IP40 specifications may be required according to the I/O unit to be selected.) Please download the Operation Manual via SMC website, https://www.smcworld.com

How to Order Manifold Assembly

Example (JJ5SY3-10S6□-□)

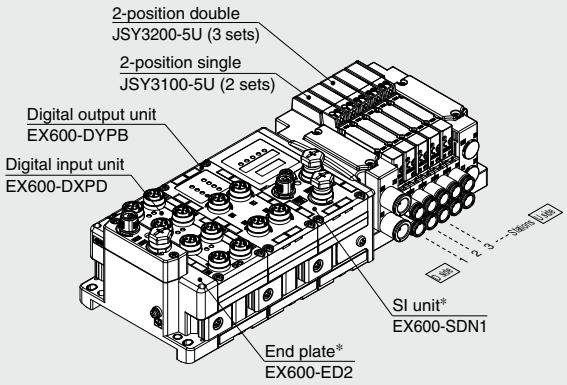

JJ5SY3-10S6Q42-05B-C8 ·· 1 set (Type 10 5-station manifold base part no.)
∗ JSY3100-5U ····· 2 sets (2-position single part no.)
∗ JSY3200-5U ····· 3 sets (2-position double part no.)
∗ EX600-DXPD ····· 1 set I/O unit part number (Station 1)
∗ EX600-DYPB ····· 1 set I/O unit part number (Station 2)
→ The asterisk denotes the symbol for the assembly. Prefix it to the part numbers of the valve, etc.

- The valve arrangement is numbered as the 1st station from the D side.
- Under the manifold part number, state the valves to be mounted, then the I/O units in order from the 1st station as shown in the figure. If the arrangement becomes complicated, specify on a manifold specification sheet.

∗1 Do not enter the SI unit part number and the end plate part number together.

Internal Pilot

How to Order Valves (With mounting screw)

Refer to page 11 for valve specifications.

JSY1000 Series JSY 1 1 0 0 T − 5 Z □

JSY3000/5000 Series JSY 3 1 0 0 − 5 Z □

❶ ❷ ❸ ❹ ❺ ❻

● With power saving circuit

● Base mounted

Made to Order (Refer to page 114 for details.)

Specification
With power saving circuit (Continuous duty type): 0.1 W (JSY3000/5000)
External pilot

❶ Series

1	JSY1000
3	JSY3000
5	JSY5000

❷ Type of actuation

1	2-position	Single
2		Double
3	3-position	Closed center
4		Exhaust center
5		Pressure center
A	4-position dual 3-port	N.C./N.C.
B		N.O./N.O.
C		N.C./N.O.

❸ Pilot valve exhaust method

0	Pilot valve individual exhaust

❹ Rated voltage

5	24 VDC

❺ Light/surge voltage suppressor and common specification

Symbol	With light	Surge voltage suppressor	Common specification
U	●	●	Non-polar
Z			Positive common
NZ			Negative common

∗ Select a valve from U or Z when the SI unit polarity is positive common. Select a valve from U or NZ when the SI unit output polarity is negative common.
∗ Only "Z" and "NZ" types are available for the JSY1000 series.
∗ When non-polar common specification type is selected, take measures to prevent surge voltage. For details, refer to page 117.

❻ Manual override

Nil: Non-locking push type

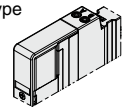

D: Push-turn locking slotted type

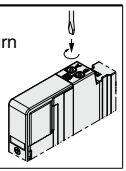

E: Push-turn locking lever type

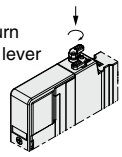

∗ Push-turn locking lever type "E" is not available for the JSY1000.

∗ **When ordering a valve individually, the base gasket is not included.**
Since the base gasket is attached to the manifold, please order the base gasket separately if it is needed for maintenance service.
Refer to page 107 for base gasket and mounting screw part numbers.

⚠ Caution

If the JSY3000/5000 series will be continuously energized, please be sure to use the power saving circuit (continuous duty type). Refer to Made to Order on page 114. Additionally, when it is used at the energizing rate over 50%, please select the product with power saving circuit.
For the JSY1000 series only the power saving circuit is available.

⚠ Protective class class Ⅲ (Mark: ⟨Ⅲ⟩)

Dimensions: JSY1000 Series

Type 10/Side Ported (Applicable to ø2 and ø4 fittings)

EX600 (M12 Connector)

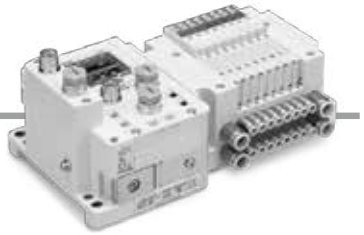

JJ5SY1-10S6□ 2/4 □ - Stations U/D/B - C2/C4 (D)

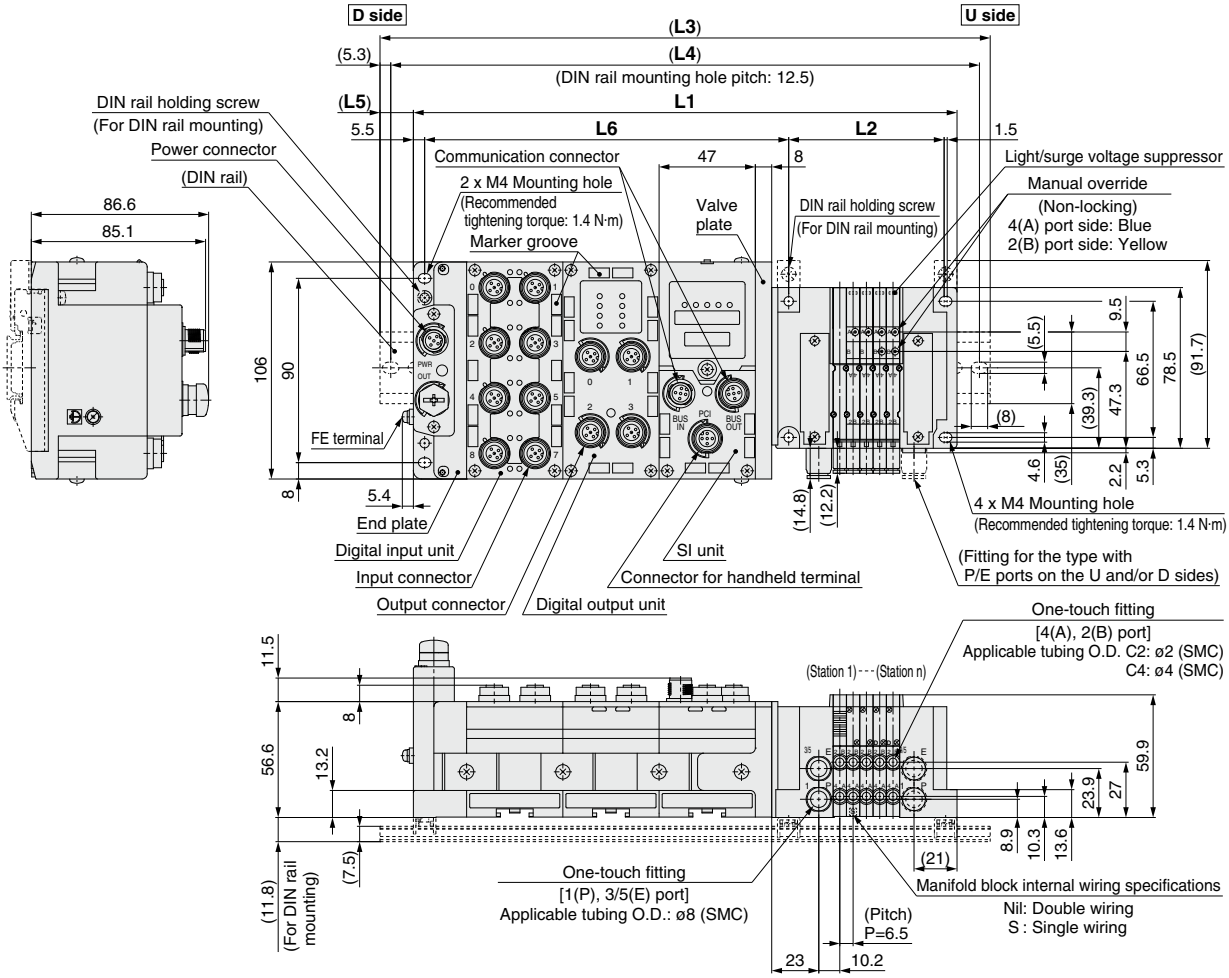

L1 = 6.5 x n1 + 139 + 47 x n2
L2 = 6.5 x n1 + 43.4
L4 = L3 − 10.5
L5 = (L3 − L1) / 2
L6 = 47 x n2 + 83.8

n1: Valve stations
n2: I/O unit stations

∗ These figures show the "JJ5SY1-10S6Q22-05D-C4."
∗ Refer to page 89 for dimensions of external pilot (Made to Order) and silencer.
∗ When CM is selected for mixed A, B port size and C6 (9 mm pitch) is included, refer to page 92 for dimensions.

L3: DIN Rail Overall Length

I/O unit stations (n2) \ Valve stations (n1)	2	3	4	5	6	7	8	9	10	11	12	13	14	15	16	17	18	19	20	21	22	23	24
0	185.5	185.5	198	198	210.5	210.5	223	223	235.5	235.5	248	248	260.5	260.5	273	273	285.5	298	298	310.5	310.5	323	323
1	223	235.5	235.5	248	260.5	260.5	273	273	285.5	285.5	298	298	310.5	310.5	323	323	335.5	335.5	348	348	360.5	360.5	373
2	273	285.5	285.5	298	298	310.5	310.5	323	323	335.5	335.5	348	348	360.5	360.5	373	385.5	385.5	398	398	410.5	410.5	423
3	323	323	335.5	348	348	360.5	360.5	373	373	385.5	385.5	398	398	410.5	410.5	423	423	435.5	435.5	448	448	460.5	460.5
4	373	373	385.5	385.5	398	398	410.5	410.5	423	423	435.5	435.5	448	448	460.5	473	473	485.5	485.5	498	498	510.5	510.5
5	410.5	423	435.5	435.5	448	448	460.5	460.5	473	473	485.5	485.5	498	498	510.5	510.5	523	523	535.5	535.5	548	548	560.5
6	460.5	473	473	485.5	485.5	498	498	510.5	510.5	523	523	535.5	535.5	548	560.5	560.5	573	573	585.5	585.5	598	598	610.5
7	510.5	523	523	535.5	535.5	548	548	560.5	560.5	573	573	585.5	585.5	598	598	610.5	610.5	623	623	635.5	635.5	648	648
8	560.5	560.5	573	573	585.5	585.5	598	598	610.5	610.5	623	623	635.5	648	648	660.5	660.5	673	673	685.5	685.5	698	698
9	610.5	610.5	623	623	635.5	635.5	648	648	660.5	660.5	673	673	685.5	685.5	698	698	710.5	710.5	723	723	735.5	735.5	748

Dimensions: JSY1000 Series

Type 10/Side Ported (Applicable to ø6 fittings)
EX600 (M12 Connector)

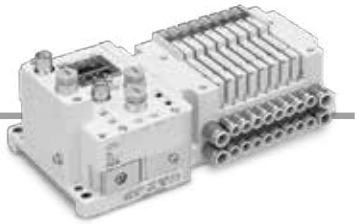

JJ5SY1-10S6□ 2/4 □ - Stations U/D/B - C6(D)

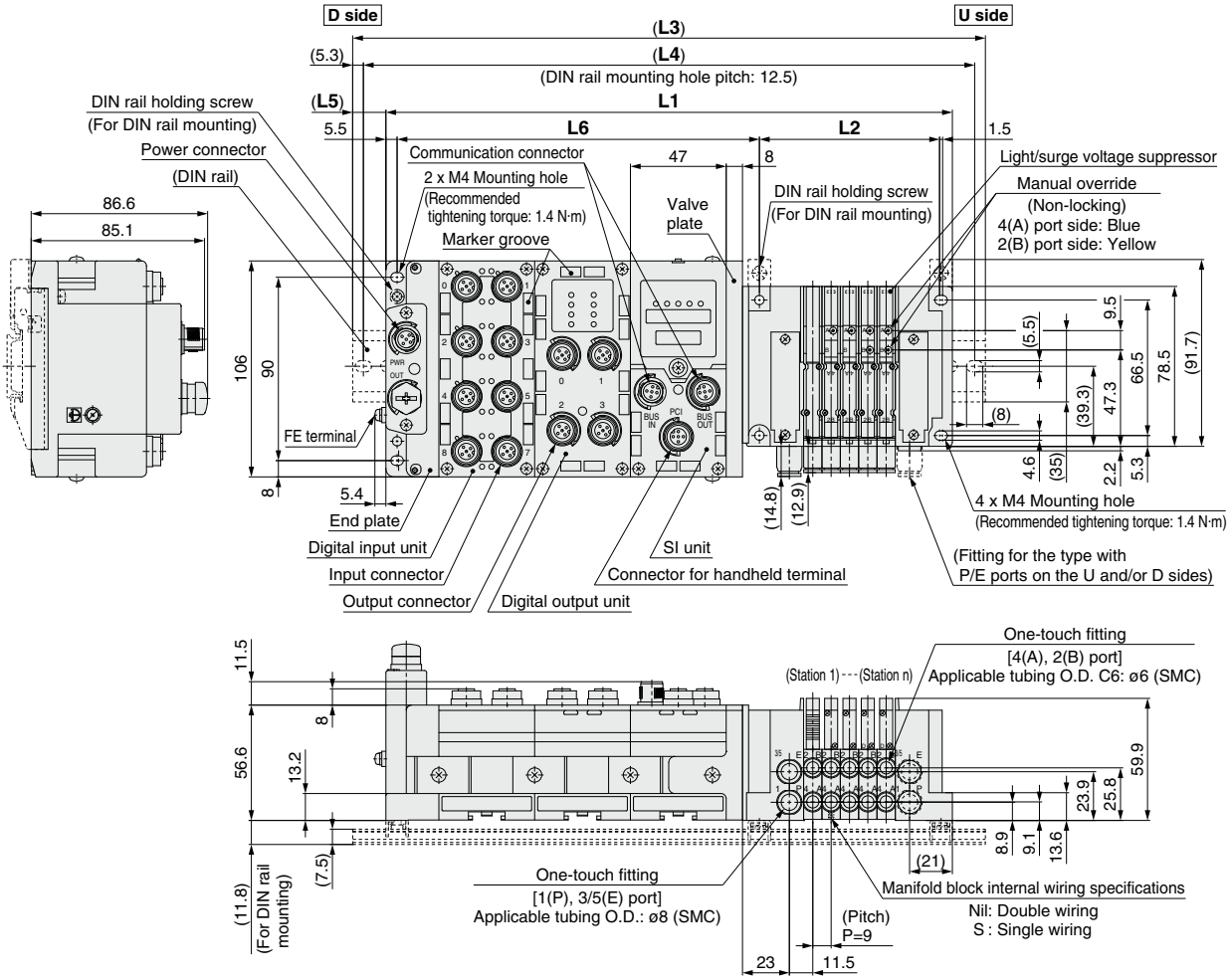

L1 = 9 x n1 + 139 + 47 x n2
L2 = 9 x n1 + 43.4
L4 = L3 – 10.5
L5 = (L3 – L1) / 2
L6 = 47 x n2 + 83.8

n1: Valve stations
n2: I/O unit stations

∗ These figures show the "JJ5SY1-10S6Q22-05D-C6."
∗ Refer to page 89 for dimensions of external pilot (Made to Order) and silencer.
∗ When CM is selected for mixed A, B port size, refer to page 92 for dimensions.

L3: DIN Rail Overall Length

I/O unit stations (n2) \ Valve stations (n1)	2	3	4	5	6	7	8	9	10	11	12	13	14	15	16	17	18	19	20	21	22	23	24
0	185.5	198	210.5	210.5	223	235.5	235.5	248	260.5	273	273	285.5	298	298	310.5	323	335.5	335.5	348	360.5	360.5	373	385.5
1	235.5	248	248	260.5	273	273	285.5	298	310.5	310.5	323	335.5	335.5	348	360.5	373	373	385.5	398	410.5	410.5	423	435.5
2	285.5	285.5	298	310.5	310.5	323	335.5	348	348	360.5	373	385.5	385.5	398	410.5	410.5	423	435.5	448	448	460.5	473	473
3	323	335.5	348	360.5	360.5	373	385.5	385.5	398	410.5	423	423	435.5	448	448	460.5	473	485.5	485.5	498	510.5	510.5	523
4	373	385.5	398	398	410.5	423	423	435.5	448	460.5	460.5	473	485.5	485.5	498	510.5	523	523	535.5	548	560.5	560.5	573
5	423	435.5	435.5	448	460.5	460.5	473	485.5	498	498	510.5	523	535.5	535.5	548	560.5	560.5	573	585.5	598	598	610.5	623
6	473	473	485.5	498	510.5	510.5	523	535.5	535.5	548	560.5	573	573	585.5	598	598	610.5	623	635.5	635.5	648	660.5	660.5
7	510.5	523	535.5	548	548	560.5	573	573	585.5	598	610.5	610.5	623	635.5	635.5	648	660.5	673	673	685.5	698	710.5	710.5
8	560.5	573	585.5	585.5	598	610.5	610.5	623	635.5	648	648	660.5	673	685.5	685.5	698	710.5	710.5	723	735.5	748	748	760.5
9	610.5	623	623	635.5	648	660.5	660.5	673	685.5	685.5	698	710.5	723	723	735.5	748	748	760.5	773	785.5	785.5	798	810.5

Dimensions: JSY1000 Series

Type 10/Side Ported (Applicable to ø2 and ø4 fittings)
EX600 (7/8 Inch Connector)

JJ5SY1-10S6□ 3/5 □ - Stations U/D/B - C2/C4 (D)

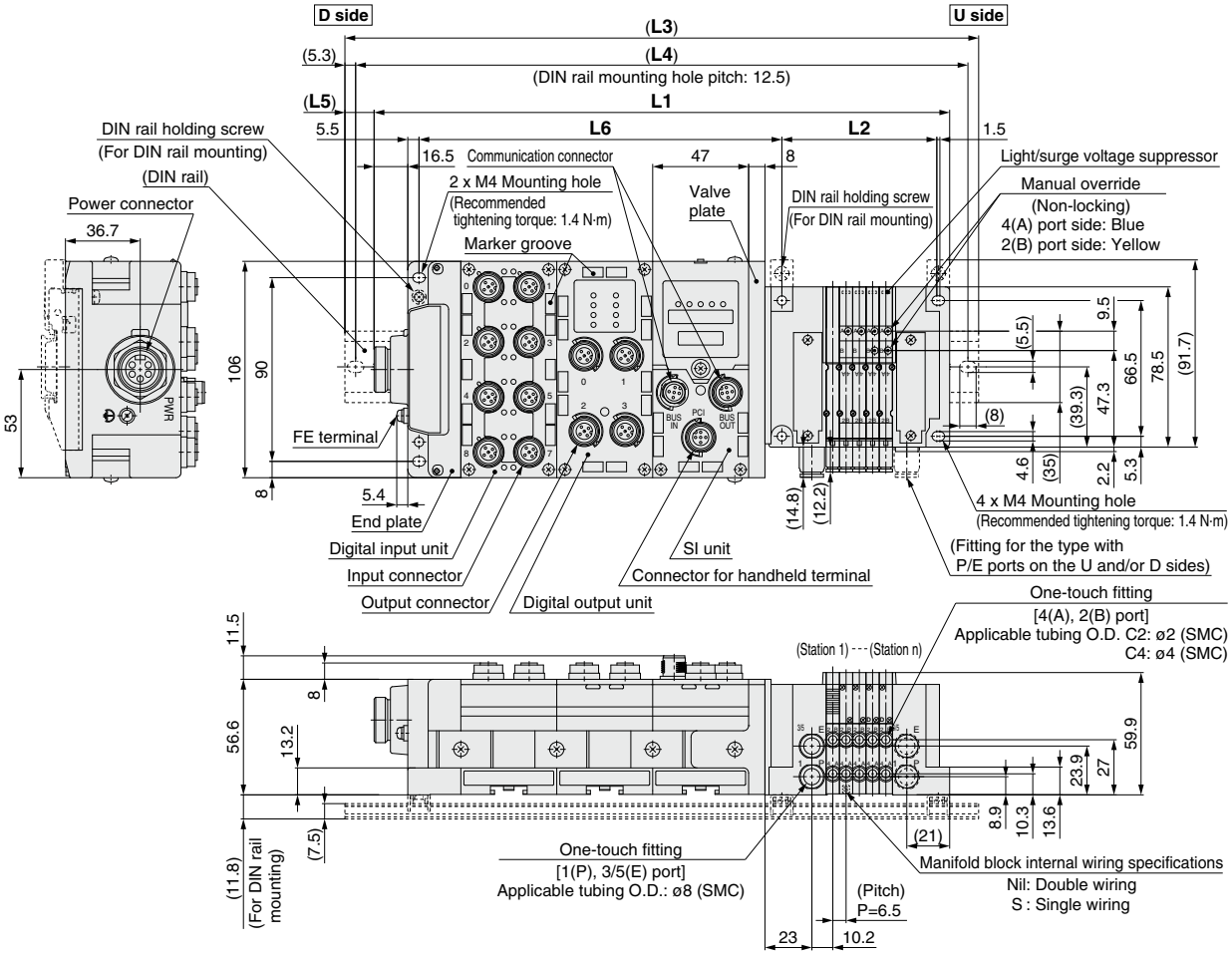

L1 = 6.5 x n1 + 155.5 + 47 x n2
L2 = 6.5 x n1 + 43.4
L4 = L3 – 10.5
L5 = (L3 – L1) / 2
L6 = 47 x n2 + 83.8

n1: Valve stations
n2: I/O unit stations

∗ These figures show the "JJ5SY1-10S6Q32-05D-C4."
∗ Refer to page 89 for dimensions of external pilot (Made to Order) and silencer.
∗ When CM is selected for mixed A, B port size and C6 (9 mm pitch) is included, refer to page 92 for dimensions.

L3: DIN Rail Overall Length

I/O unit stations (n2) \ Valve stations (n1)	2	3	4	5	6	7	8	9	10	11	12	13	14	15	16	17	18	19	20	21	22	23	24
0	198	210.5	210.5	223	223	235.5	235.5	248	248	260.5	260.5	273	273	285.5	285.5	298	298	310.5	310.5	323	323	335.5	335.5
1	248	248	260.5	260.5	273	273	285.5	285.5	298	298	310.5	310.5	323	335.5	335.5	348	348	360.5	360.5	373	373	385.5	385.5
2	298	298	310.5	310.5	323	323	335.5	335.5	348	348	360.5	360.5	373	373	385.5	385.5	398	398	410.5	410.5	423	423	435.5
3	335.5	348	348	360.5	360.5	373	373	385.5	385.5	398	398	410.5	423	423	435.5	435.5	448	448	460.5	460.5	473	473	485.5
4	385.5	398	398	410.5	410.5	423	423	435.5	435.5	448	448	460.5	460.5	473	473	485.5	485.5	498	498	510.5	510.5	523	523
5	435.5	435.5	448	448	460.5	460.5	473	473	485.5	485.5	498	510.5	510.5	523	523	535.5	535.5	548	548	560.5	560.5	573	573
6	485.5	485.5	498	498	510.5	510.5	523	523	535.5	535.5	548	548	560.5	560.5	573	573	585.5	585.5	598	598	610.5	610.5	623
7	523	535.5	535.5	548	548	560.5	560.5	573	573	585.5	598	598	610.5	610.5	623	623	635.5	635.5	648	648	660.5	660.5	673
8	573	585.5	585.5	598	598	610.5	610.5	623	623	635.5	635.5	648	648	660.5	660.5	673	673	685.5	685.5	698	698	710.5	723
9	623	623	635.5	635.5	648	648	660.5	660.5	673	685.5	685.5	698	698	710.5	710.5	723	723	735.5	735.5	748	748	760.5	760.5

Dimensions: JSY1000 Series

Type 10/Side Ported (Applicable to ø6 fittings)
EX600 (7/8 Inch Connector)

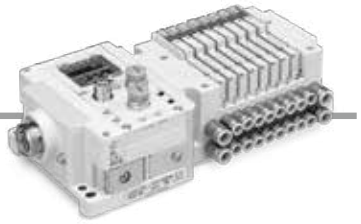

JJ5SY1-10S6□ 3/5 □ - Stations U/D/B - C6(D)

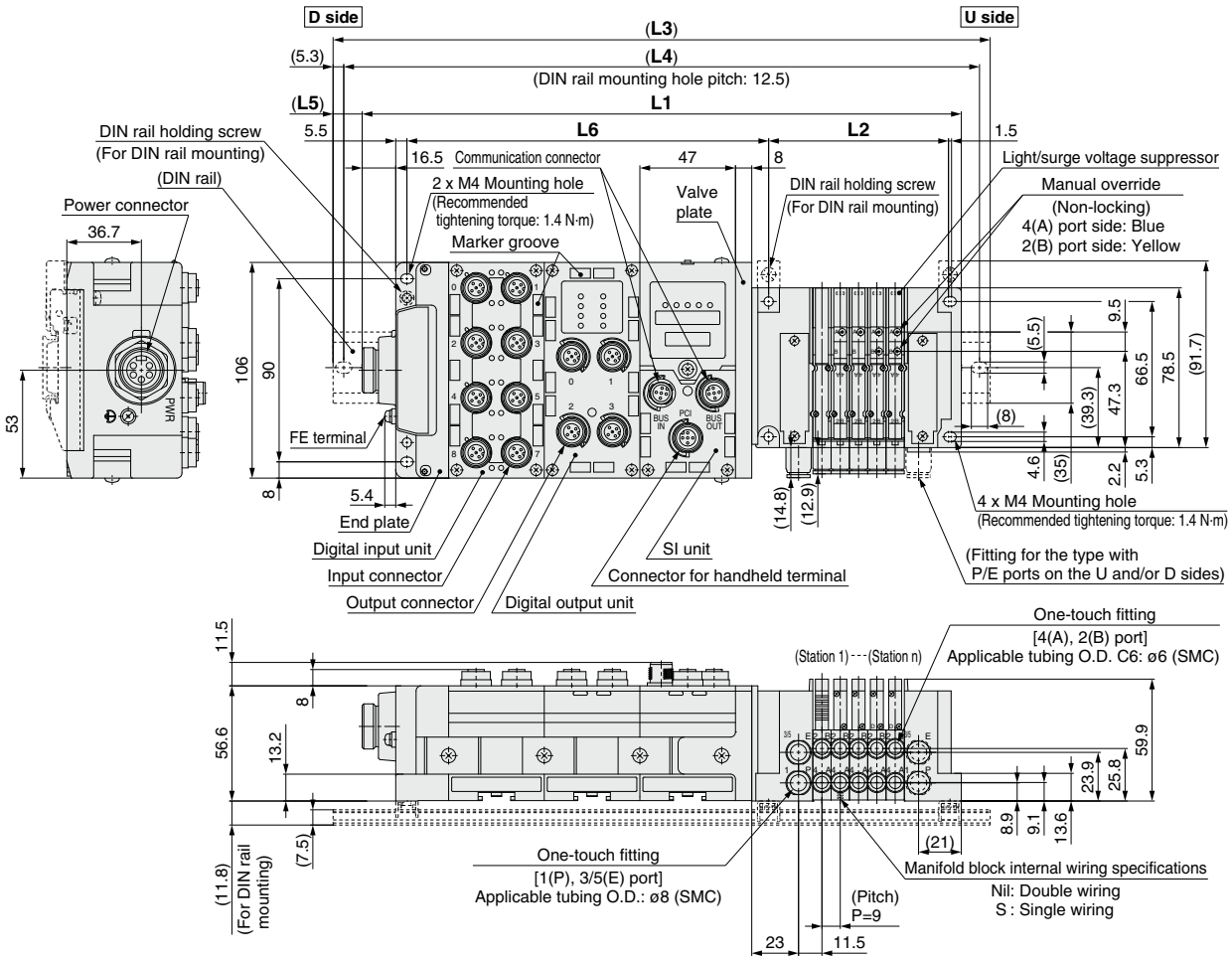

L1 = 9 x n1 + 155.5 + 47 x n2
L2 = 9 x n1 + 43.4
L4 = L3 – 10.5
L5 = (L3 – L1) / 2
L6 = 47 x n2 + 83.8

n1: Valve stations
n2: I/O unit stations

∗ These figures show the "JJ5SY1-10S6Q32-05D-C6."
∗ Refer to page 89 for dimensions of external pilot (Made to Order) and silencer.
∗ When CM is selected for mixed A, B port size, refer to page 92 for dimensions.

L3: DIN Rail Overall Length

I/O unit stations (n2) \ Valve stations (n1)	2	3	4	5	6	7	8	9	10	11	12	13	14	15	16	17	18	19	20	21	22	23	24
0	198	210.5	223	235.5	235.5	248	260.5	260.5	273	285.5	298	298	310.5	323	323	335.5	348	360.5	360.5	373	385.5	398	398
1	248	260.5	273	273	285.5	298	298	310.5	323	335.5	335.5	348	360.5	373	373	385.5	398	398	410.5	423	435.5	435.5	448
2	298	310.5	310.5	323	335.5	348	348	360.5	373	373	385.5	398	410.5	410.5	423	435.5	435.5	448	460.5	473	473	485.5	498
3	348	348	360.5	373	385.5	385.5	398	410.5	410.5	423	435.5	448	448	460.5	473	473	485.5	498	510.5	510.5	523	535.5	548
4	385.5	398	410.5	423	423	435.5	448	448	460.5	473	485.5	485.5	498	510.5	523	523	535.5	548	548	560.5	573	585.5	585.5
5	435.5	448	460.5	460.5	473	485.5	498	498	510.5	523	523	535.5	548	560.5	560.5	573	585.5	585.5	598	610.5	623	623	635.5
6	485.5	498	498	510.5	523	535.5	535.5	548	560.5	560.5	573	585.5	598	598	610.5	623	623	635.5	648	660.5	660.5	673	685.5
7	535.5	535.5	548	560.5	573	573	585.5	598	598	610.5	623	635.5	635.5	648	660.5	673	673	685.5	698	698	710.5	723	735.5
8	573	585.5	598	610.5	610.5	623	635.5	648	648	660.5	673	673	685.5	698	710.5	710.5	723	735.5	735.5	748	760.5	773	773
9	623	635.5	648	648	660.5	673	685.5	685.5	698	710.5	710.5	723	735.5	748	748	760.5	773	773	785.5	798	810.5	810.5	823

Dimensions: JSY3000 Series

Type 10/Side Ported
EX600 (M12 Connector)

JJ5SY3-10S6□ 2/4 □ - Stations U/D/B - C6/C8 (D)

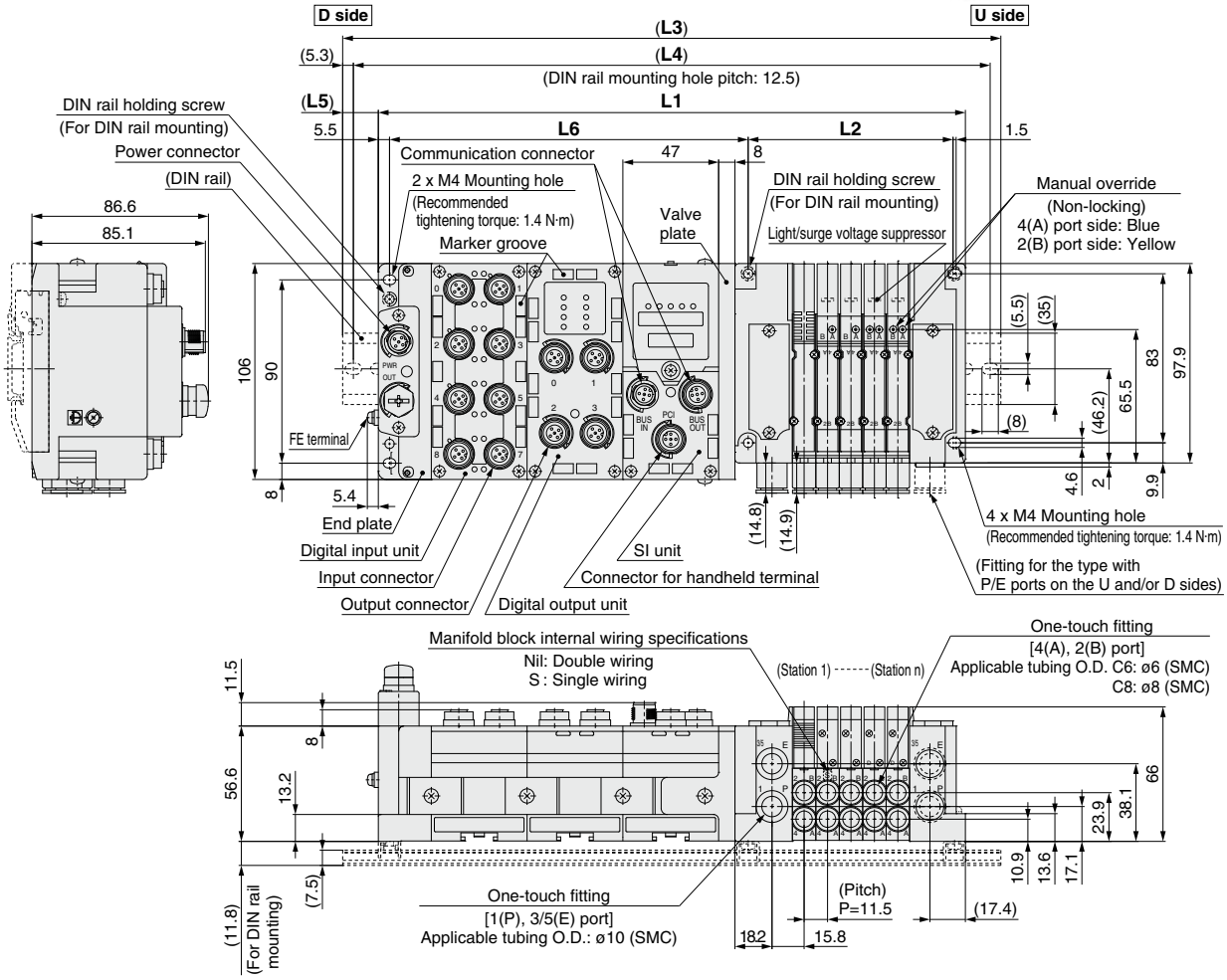

L1 = 11.5 x n1 + 136.6 + 47 x n2
L2 = 11.5 x n1 + 43.1
L4 = L3 – 10.5
L5 = (L3 – L1) / 2
L6 = 47 x n2 + 82

n1: Valve stations
n2: I/O unit stations

∗ These figures show the "JJ5SY3-10S6Q22-05D-C8."
∗ Refer to page 90 for dimensions of external pilot (Made to Order) and silencer.

L3: DIN Rail Overall Length

I/O unit stations (n2) \ Valve stations (n1)	2	3	4	5	6	7	8	9	10	11	12	13	14	15	16	17	18	19	20	21	22	23	24
0	185.5	198	210.5	223	235.5	248	260.5	273	285.5	298	298	310.5	323	335.5	348	360.5	373	385.5	398	410.5	423	435.5	448
1	235.5	248	260.5	273	285.5	298	310.5	310.5	323	335.5	348	360.5	373	385.5	398	410.5	423	435.5	448	460.5	460.5	473	485.5
2	285.5	298	310.5	323	323	335.5	348	360.5	373	385.5	398	410.5	423	435.5	448	460.5	473	473	485.5	498	510.5	523	535.5
3	335.5	335.5	348	360.5	373	385.5	398	410.5	423	435.5	448	460.5	473	485.5	485.5	498	510.5	523	535.5	548	560.5	573	585.5
4	373	385.5	398	410.5	423	435.5	448	460.5	473	485.5	498	498	510.5	523	535.5	548	560.5	573	585.5	598	610.5	623	635.5
5	423	435.5	448	460.5	473	485.5	498	510.5	510.5	523	535.5	548	560.5	573	585.5	598	610.5	623	635.5	648	648	660.5	673
6	473	485.5	498	510.5	523	523	535.5	548	560.5	573	585.5	598	610.5	623	635.5	648	660.5	660.5	673	685.5	698	710.5	723
7	523	535.5	535.5	548	560.5	573	585.5	598	610.5	623	635.5	648	660.5	673	673	685.5	698	710.5	723	735.5	748	760.5	773
8	560.5	573	585.5	598	610.5	623	635.5	648	660.5	673	685.5	685.5	698	710.5	723	735.5	748	760.5	773	785.5	798	810.5	823
9	610.5	623	635.5	648	660.5	673	685.5	698	698	710.5	723	735.5	748	760.5	773	785.5	798	810.5	823	835.5	848	848	860.5

Dimensions: JSY3000 Series

Type 10/Side Ported
EX600 (7/8 Inch Connector)

JJ5SY3-10S6□ 3/5 □ - Stations U/D/B - C6/C8 (D)

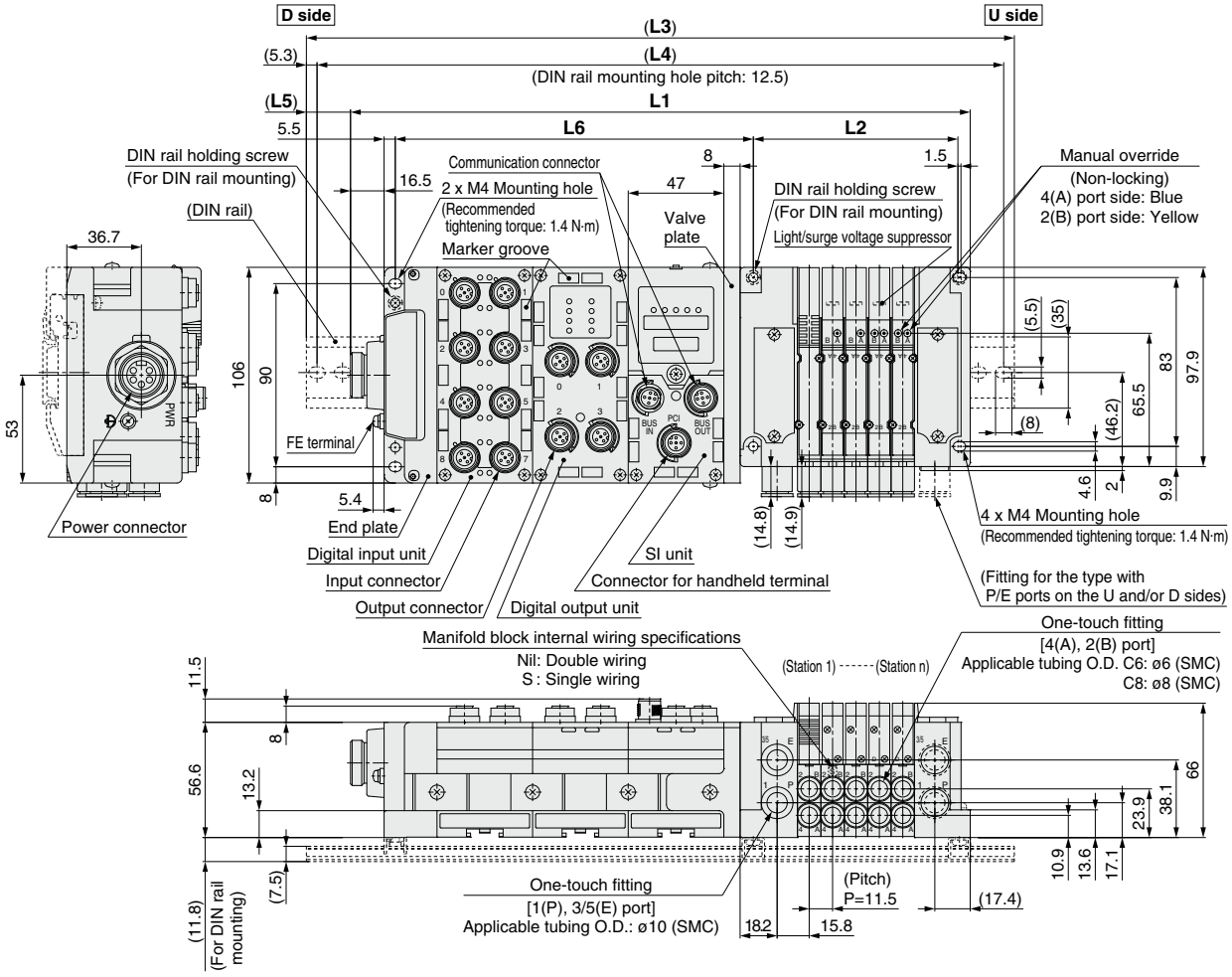

L1 = 11.5 x n1 + 153.1 + 47 x n2
L2 = 11.5 x n1 + 43.1
L4 = L3 – 10.5
L5 = (L3 – L1) / 2
L6 = 47 x n2 + 82

n1: Valve stations
n2: I/O unit stations

∗ These figures show the "JJ5SY3-10S6Q32-05D-C8."
∗ Refer to page 90 for dimensions of external pilot (Made to Order) and silencer.

L3: DIN Rail Overall Length

I/O unit stations (n2) \ Valve stations (n1)	2	3	4	5	6	7	8	9	10	11	12	13	14	15	16	17	18	19	20	21	22	23	24
0	223	235.5	248	260.5	273	285.5	285.5	298	310.5	323	335.5	348	360.5	373	385.5	398	410.5	423	423	435.5	448	460.5	473
1	273	285.5	298	298	310.5	323	335.5	348	360.5	373	385.5	398	410.5	423	435.5	435.5	448	460.5	473	485.5	498	510.5	523
2	310.5	323	335.5	348	360.5	373	385.5	398	410.5	423	435.5	448	448	460.5	473	485.5	498	510.5	523	535.5	548	560.5	573
3	360.5	373	385.5	398	410.5	423	435.5	448	460.5	460.5	473	485.5	498	510.5	523	535.5	548	560.5	573	585.5	598	610.5	610.5
4	410.5	423	435.5	448	460.5	473	473	485.5	498	510.5	523	535.5	548	560.5	573	585.5	598	610.5	623	623	635.5	648	660.5
5	460.5	473	485.5	485.5	498	510.5	523	535.5	548	560.5	573	585.5	598	610.5	623	635.5	635.5	648	660.5	673	685.5	698	710.5
6	498	510.5	523	535.5	548	560.5	573	585.5	598	610.5	623	635.5	648	648	660.5	673	685.5	698	710.5	723	735.5	748	760.5
7	548	560.5	573	585.5	598	610.5	623	635.5	648	660.5	660.5	673	685.5	698	710.5	723	735.5	748	760.5	773	785.5	798	798
8	598	610.5	623	635.5	648	660.5	673	673	685.5	698	710.5	723	735.5	748	760.5	773	785.5	798	810.5	810.5	823	835.5	848
9	648	660.5	673	685.5	685.5	698	710.5	723	735.5	748	760.5	773	785.5	798	810.5	823	823	835.5	848	860.5	873	885.5	898

Dimensions: JSY5000 Series

Type 10/Side Ported
EX600 (M12 Connector)

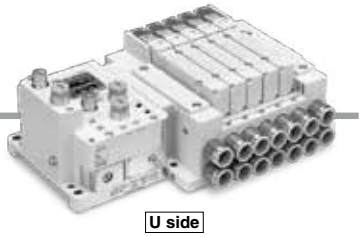

JJ5SY5-10S6□ 2/4 □ - Stations U/D/B - C10/C12 (D)

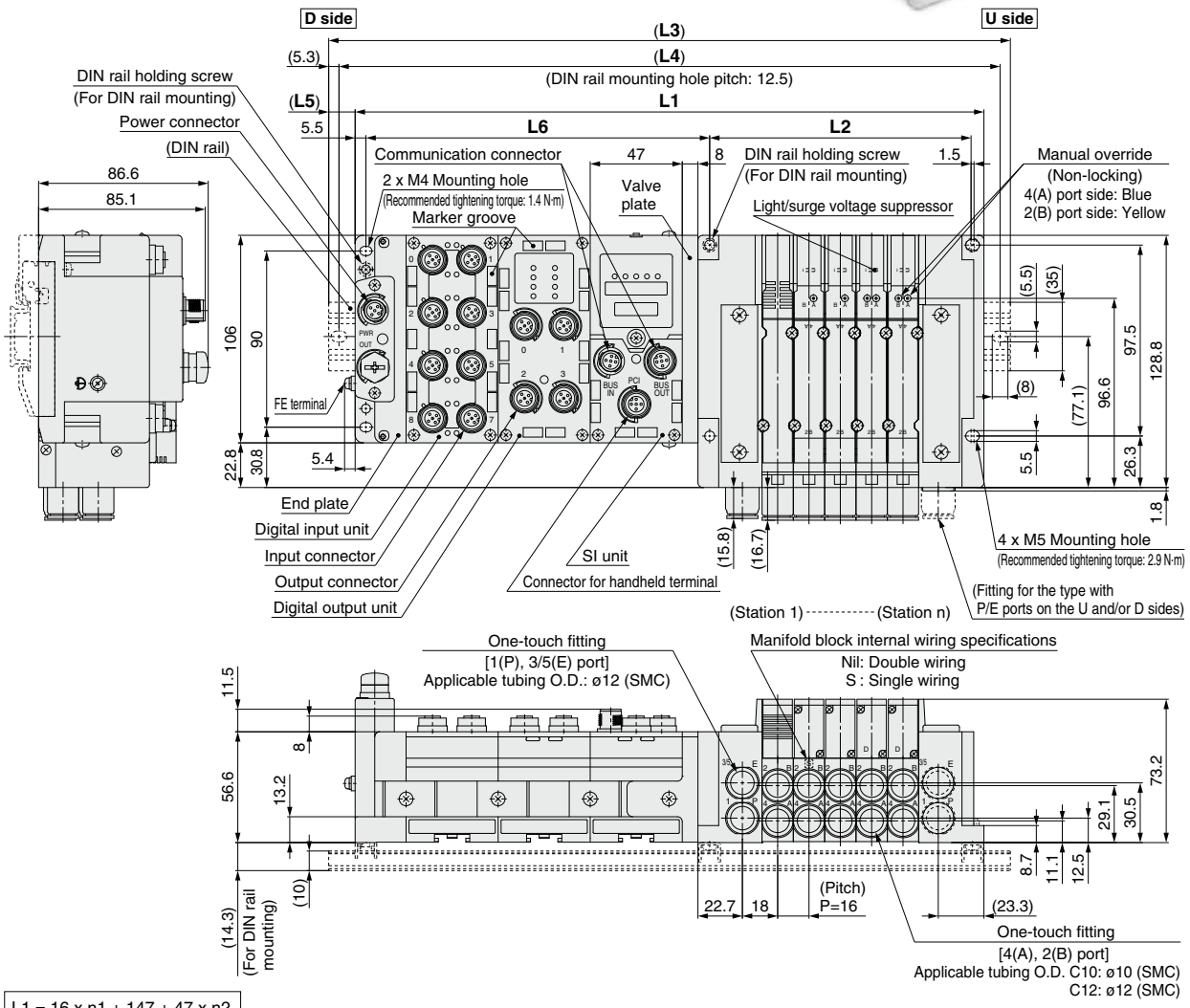

L1 = 16 x n1 + 147 + 47 x n2
L2 = 16 x n1 + 53.5
L4 = L3 – 10.5
L5 = (L3 – L1) / 2
L6 = 47 x n2 + 81.5

n1: Valve stations
n2: I/O unit stations

∗ These figures show the "JJ5SY5-10S6Q22-05D-C12."
∗ Refer to page 91 for dimensions of external pilot (Made to Order) and silencer.

L3: DIN Rail Overall Length

I/O unit stations (n2) \ Valve stations (n1)	2	3	4	5	6	7	8	9	10	11	12	13	14	15	16	17	18	19	20	21	22	23	24
0	210.5	223	235.5	260.5	273	285.5	310.5	323	335.5	348	373	385.5	398	410.5	435.5	448	460.5	485.5	498	510.5	523	548	560.5
1	260.5	273	285.5	298	323	335.5	348	373	385.5	398	410.5	435.5	448	460.5	485.5	498	510.5	523	548	560.5	573	585.5	610.5
2	298	323	335.5	348	360.5	385.5	398	410.5	435.5	448	460.5	473	498	510.5	523	548	560.5	573	585.5	610.5	623	635.5	660.5
3	348	360.5	385.5	398	410.5	435.5	448	460.5	473	498	510.5	523	535.5	560.5	573	585.5	610.5	623	635.5	648	673	685.5	698
4	398	410.5	423	448	460.5	473	498	510.5	523	535.5	560.5	573	585.5	610.5	623	635.5	648	673	685.5	698	710.5	735.5	748
5	448	460.5	473	485.5	510.5	523	535.5	560.5	573	585.5	598	623	635.5	648	673	685.5	698	710.5	735.5	748	760.5	785.5	798
6	485.5	510.5	523	535.5	560.5	573	585.5	598	623	635.5	648	660.5	685.5	698	710.5	735.5	748	760.5	773	798	810.5	823	848
7	535.5	548	573	585.5	598	623	635.5	648	660.5	685.5	698	710.5	735.5	748	760.5	773	798	810.5	823	835.5	860.5	873	885.5
8	585.5	598	610.5	635.5	648	660.5	685.5	698	710.5	723	748	760.5	773	798	810.5	823	835.5	860.5	873	885.5	910.5	923	935.5
9	635.5	648	660.5	685.5	698	710.5	723	748	760.5	773	785.5	810.5	823	835.5	860.5	873	885.5	898	923	935.5	948	973	985.5

Dimensions: JSY5000 Series

Type 10/Side Ported
EX600 (7/8 Inch Connector)

JJ5SY5-10S6□ 3/5 □ - Stations U/D/B - C10/C12 (D)

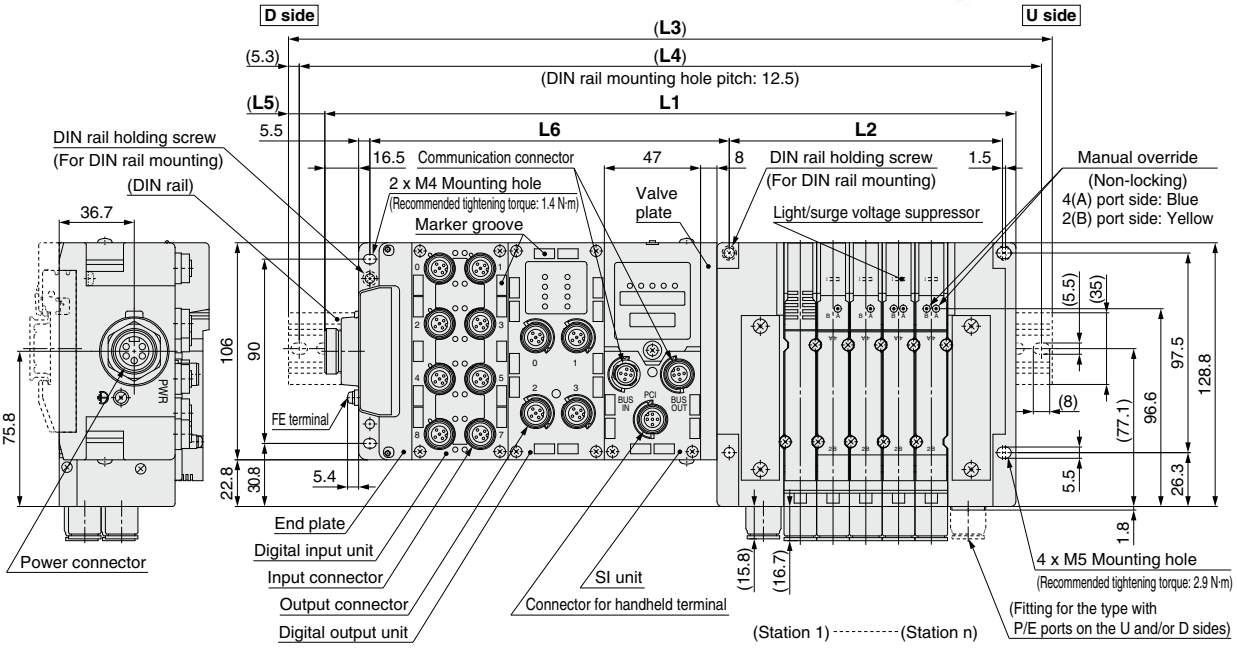

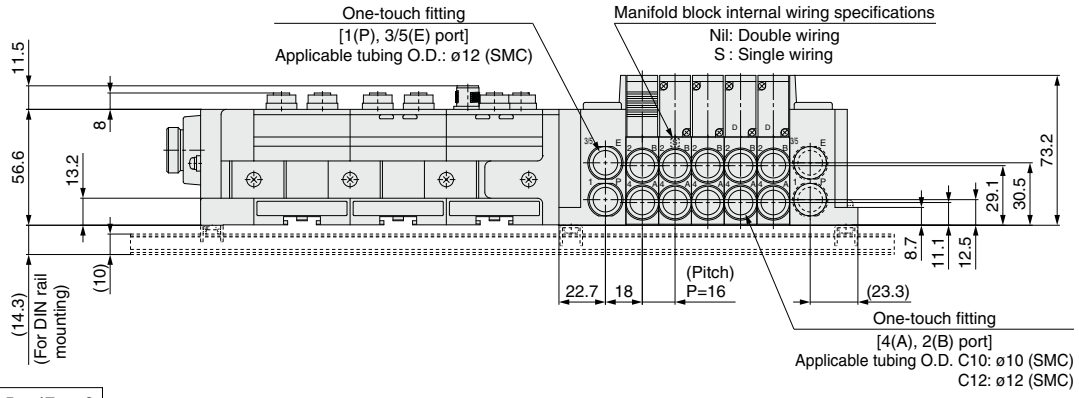

L1 = 16 x n1 + 163.5 + 47 x n2
L2 = 16 x n1 + 53.5
L4 = L3 − 10.5
L5 = (L3 − L1) / 2
L6 = 47 x n2 + 81.5

n1: Valve stations
n2: I/O unit stations

∗ These figures show the "JJ5SY5-10S6Q32-05D-C12."
∗ Refer to page 91 for dimensions of external pilot (Made to Order) and silencer.

L3: DIN Rail Overall Length

I/O unit stations (n2) \ Valve stations (n1)	2	3	4	5	6	7	8	9	10	11	12	13	14	15	16	17	18	19	20	21	22	23	24
0	223	235.5	260.5	273	285.5	310.5	323	335.5	348	373	385.5	398	423	435.5	448	460.5	485.5	498	510.5	523	548	560.5	573
1	273	285.5	298	323	335.5	348	373	385.5	398	410.5	435.5	448	460.5	485.5	498	510.5	523	548	560.5	573	598	610.5	623
2	323	335.5	348	373	385.5	398	410.5	435.5	448	460.5	473	498	510.5	523	548	560.5	573	585.5	610.5	623	635.5	660.5	673
3	360.5	385.5	398	410.5	435.5	448	460.5	473	498	510.5	523	548	560.5	573	585.5	610.5	623	635.5	648	673	685.5	698	723
4	410.5	423	448	460.5	473	498	510.5	523	535.5	560.5	573	585.5	610.5	623	635.5	648	673	685.5	698	723	735.5	748	760.5
5	460.5	473	498	510.5	523	535.5	560.5	573	585.5	598	623	635.5	648	673	685.5	698	710.5	735.5	748	760.5	785.5	798	810.5
6	510.5	523	535.5	560.5	573	585.5	598	623	635.5	648	673	685.5	698	710.5	735.5	748	760.5	773	798	810.5	823	848	860.5
7	548	573	585.5	598	623	635.5	648	660.5	685.5	698	710.5	735.5	748	760.5	773	798	810.5	823	848	860.5	873	885.5	910.5
8	598	623	635.5	648	660.5	685.5	698	710.5	723	748	760.5	773	798	810.5	823	835.5	860.5	873	885.5	910.5	923	935.5	948
9	648	660.5	685.5	698	710.5	723	748	760.5	773	798	810.5	823	835.5	860.5	873	885.5	898	923	935.5	948	973	985.5	—

Plug-in Connector Connecting Base

EX250

Type 10
Side Ported

JSY1000/3000/5000 Series

CE RoHS

Internal Pilot

How to Order Manifolds

JJ5SY 3 – 10 S Q 1 A – 05 U – C6 ☐

❶ ❷ ❸ ❹ ❺ ❻ ❼ ❽ ❾

❶ Series

1	JSY1000
3	JSY3000
5	JSY5000

❷ Type

10	Side ported

❸ SI unit

0	Without SI unit		
Q	DeviceNet™ (Negative common)		
N	PROFIBUS DP (Negative common)		
V	CC-Link (Positive common)		
TA	AS-Interface (Negative common)	2 isolated common type	8 in/8 out, 31 slave modes
TB			4 in/4 out, 31 slave modes
TC		1 common type	8 in/8 out, 31 slave modes
TD			4 in/4 out, 31 slave modes
Y	CANopen (Negative common)		
ZE	EtherNet/IP™ (Negative common)		

∗ Ensure a match with the common specification of the valve to be used.
∗ Input block cannot be mounted without SI unit.
∗ The supply current from the SI unit of AS-Interface applicable 1 power supply system specification to the input block and valve is limited.

❹ Input block stations

Nil	None
1	1 station
⋮	⋮
8	8 stations

∗ Without SI unit, the symbol is nil.
The maximum number of stations is limited for the AS-Interface applicable SI unit.

❺ Input block type

	PNP sensor input	NPN sensor input
Without input block	Nil	
M12, 2 inputs	A	D
M12, 4 inputs	B	E
M8, 4 inputs	C	F

∗ Without SI unit, the symbol is nil.

❻ Valve stations

Symbol	Stations	Note
02	2 stations	Double wiring∗1
⋮	⋮	
16	16 stations	
02	2 stations	Specified layout∗2 (Up to 32 solenoids available)
⋮	⋮	
24	24 stations	

∗1 Double wiring: 2-position single, double, 3-position, and 4-position valves can be used on all manifold stations.
Use of a 2-position single solenoid will result in an unused control signal. If this is not desired, order with a specified layout.
∗2 Specified layout: Indicate the wiring specifications on the manifold specification sheet. (Note that 2-position double, 3-position, and 4-position valves cannot be used where single wiring has been specified.)
When determining the number of valve stations, note that the maximum number of solenoids for the AS-Interface applicable SI unit specification is as follows.
· 8 in/8 out specification: Max. 8 solenoids
· 4 in/4 out specification: Max. 4 solenoids
∗ This also includes the number of blanking plates.
∗ For the product without the SI unit (S0), note the maximum number of solenoids of the SI unit that will be mounted. If the layout is specified, indicate it on the manifold specification sheet.

Made to Order
(Refer to page 114 for details.)

Specification
External pilot (SUP/EXH block assembly)

❼ P, E port entry, SUP/EXH block assembly

P, E port entry	Internal pilot	Internal pilot, Built-in silencer
U side (2 to 10 stations)	U	C
D side (2 to 10 stations)	D	E
Both sides (2 to 24 stations)	B	F

∗ 3/5(E) port is plugged for the built-in silencer type.
∗ When the built-in silencer type is used, keep the exhaust port from coming in direct contact with water or other liquids.
∗ The external pilot specification should be ordered as Made to Order. For details, refer to page 114.

❽ A, B port size (Metric/One-touch fitting)

Symbol	A, B port		JSY1000	JSY3000	JSY5000
C2	Straight	ø2	●	—	—
C4		ø4	●	—	—
C6		ø6	●	●	—
C8		ø8	—	●	—
C10		ø10	—	—	●
C12		ø12	—	—	●
CM∗1		Straight port, mixed sizes	●	●	●
P, E port size (One-touch fittings)			ø8	ø10	ø12

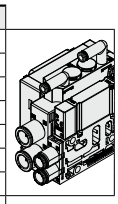

∗1 Indicate the sizes on the manifold specification sheet in the case of "CM."
∗ The JSY1000 manifold pitch for C2 and C4 is 6.5 mm, and 9 mm for C6. When CM is selected, the manifold pitch is different depending on the selected fitting.

For details about the EX250 Integrated Type (For Input/Output) Serial Transmission System, refer to the Web Catalog and the Operation Manual. For details about part numbers of SI units to be mounted, refer to page 103. Please download the Operation Manual via SMC website, https://www.smcworld.com

❾ Mounting and Option

Symbol	Mounting
Nil	Direct mounting
D☐	DIN rail mounting

∗ Enter the number of stations inside ☐ when it is larger than the number of valve stations. (Refer to "DIN Rail Option" shown below.)
∗ Refer to page 118 for the fixation of DIN rail mounting type manifold.
∗ DIN rail mounting (D☐) is not available for the product without the SI unit (S0).

DIN Rail Option

Nil	DIN rail mounting (With DIN rail)	
0	DIN rail mounting (Without DIN rail)	
3	For 3 stations	Specify a longer rail than the standard length.
⋮	⋮	
24	For 24 stations	

∗ Refer to L3 of the dimensions for the DIN rail length and order separately. (Refer to page 110 for the DIN rail part number.)

How to Order Manifold Assembly

Example (JJ5SY3-10S□-□)

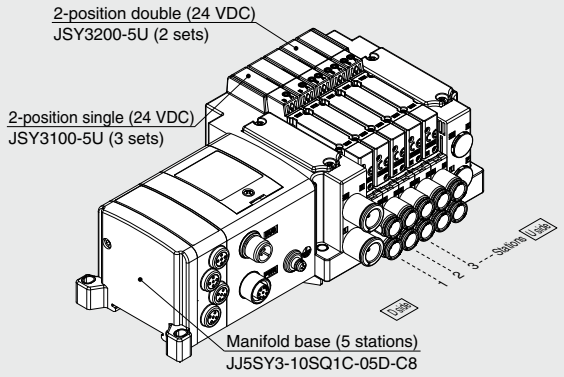

JJ5SY3-10SQ1C-05D-C8 ··· 1 set (Type 10 5-station manifold base part no.)
∗ JSY3100-5U ····· 3 sets (2-position single part no.)
∗ JSY3200-5U ····· 2 sets (2-position double part no.)
→ The asterisk denotes the symbol for the assembly. Prefix it to the part numbers of the valve, etc.

- The valve arrangement is numbered as the 1st station from the D side.
- Under the manifold part number, state the valves to be mounted in order from the 1st station as shown in the figure. If the arrangement becomes complicated, specify on a manifold specification sheet.

Internal Pilot

How to Order Valves (With mounting screw)

Refer to page 11 for valve specifications.

JSY1000 Series JSY 1 1 0 0 T − 5 Z □

JSY3000/5000 Series JSY 3 1 0 0 − 5 Z □

❶ ❷ ❸ ❹ ❺ ❻

● With power saving circuit

● Base mounted

Made to Order (Refer to page 114 for details.)

Specification
With power saving circuit (Continuous duty type): 0.1 W (JSY3000/5000)
External pilot

❶ Series

1	JSY1000
3	JSY3000
5	JSY5000

❸ Pilot valve exhaust method

0	Pilot valve individual exhaust

❹ Rated voltage

5	24 VDC

❷ Type of actuation

1	2-position	Single
2		Double
3	3-position	Closed center
4		Exhaust center
5		Pressure center
A	4-position dual 3-port	N.C./N.C.
B		N.O./N.O.
C		N.C./N.O.

❺ Light/surge voltage suppressor and common specification

Symbol	With light	Surge voltage suppressor	Common specification
U	●	●	Non-polar
Z			Positive common
NZ			Negative common

∗ "U" is applicable for every SI unit. However, "Z" can be used only for CC-Link applicable unit and "NZ" is for units which are not CC-Link applicable.
∗ Only "Z" and "NZ" types are available for the JSY1000 series.
∗ When non-polar common specification type is selected, take measures to prevent surge voltage. For details, refer to page 117.

❻ Manual override

Nil: Non-locking push type

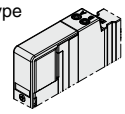

D: Push-turn locking slotted type

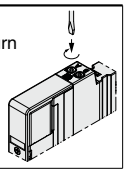

E: Push-turn locking lever type

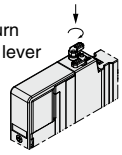

∗ Push-turn locking lever type "E" is not available for the JSY1000.

∗ **When ordering a valve individually, the base gasket is not included.**
Since the base gasket is attached to the manifold, please order the base gasket separately if it is needed for maintenance service.
Refer to page 107 for base gasket and mounting screw part numbers.

⚠ Caution

If the JSY3000/5000 series will be continuously energized, please be sure to use the power saving circuit (continuous duty type). Refer to Made to Order on page 114. Additionally, when it is used at the energizing rate over 50%, please select the product with power saving circuit.
For the JSY1000 series only the power saving circuit is available.

⚠ Protective class class Ⅲ (Mark: ⟨Ⅲ⟩)

Dimensions: JSY1000 Series

Type 10/Side Ported (Applicable to ø2 and ø4 fittings)

EX250

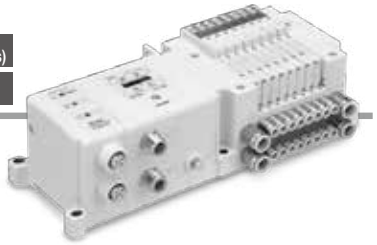

JJ5SY1-10S□ - Stations U/D/B - C2/C4 (D)

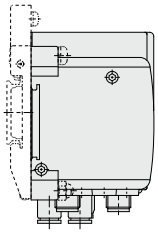

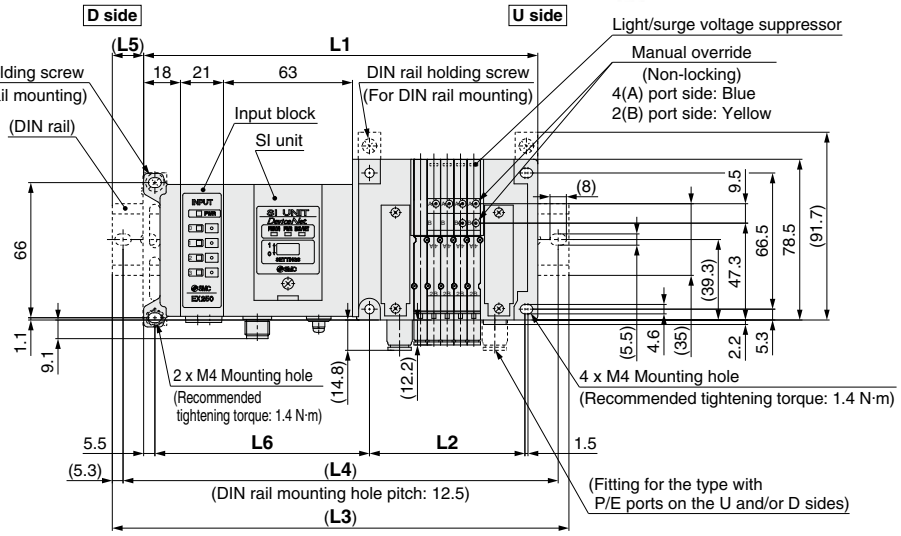

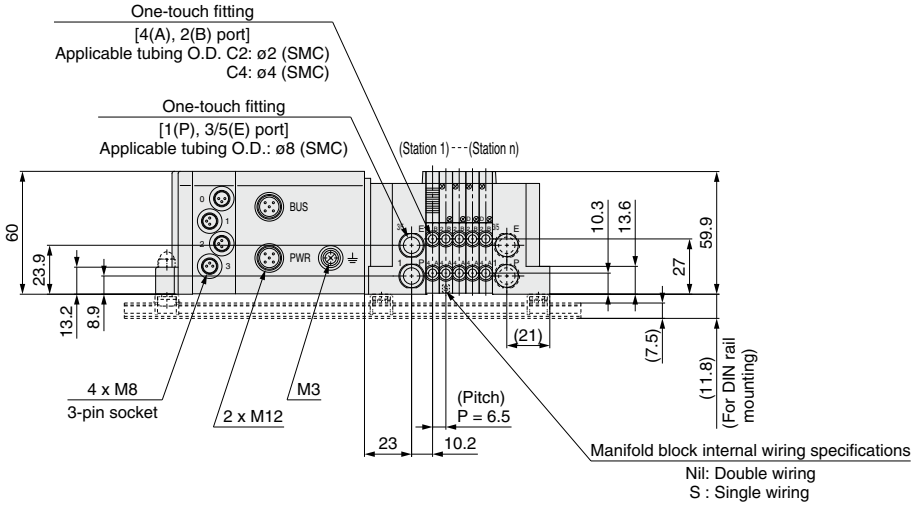

L1 = 6.5 x n1 + 139 + 21 x n2
L2 = 6.5 x n1 + 43.4
L4 = L3 – 10.5
L5 = (L3 – L1) / 2
L6 = 21 x n2 + 83.8

n1: Number of valve stations of the JSY1000
n2: Input block stations

∗ These figures show the "JJ5SY1-10SQ1A-05D-C4."
∗ Refer to page 89 for dimensions of external pilot (Made to Order) and silencer.
∗ When CM is selected for mixed A, B port size and C6 (9 mm pitch) is included, refer to page 92 for dimensions.

L3: DIN Rail Overall Length

I/O unit stations (n2) \ Valve stations (n1)	2	3	4	5	6	7	8	9	10	11	12	13	14	15	16	17	18	19	20	21	22	23	24
0	185.5	185.5	198	198	210.5	210.5	223	223	235.5	235.5	248	248	260.5	260.5	273	273	285.5	298	298	310.5	310.5	323	323
1	198	210.5	210.5	223	223	235.5	235.5	248	260.5	260.5	273	273	285.5	285.5	298	298	310.5	310.5	323	323	335.5	335.5	348
2	223	235.5	235.5	248	248	260.5	260.5	273	273	285.5	285.5	298	298	310.5	310.5	323	323	335.5	335.5	348	348	360.5	360.5
3	248	248	260.5	260.5	273	273	285.5	285.5	298	298	310.5	310.5	323	323	335.5	348	348	360.5	360.5	373	373	385.5	385.5
4	260.5	273	273	285.5	285.5	298	310.5	310.5	323	323	335.5	335.5	348	348	360.5	360.5	373	373	385.5	385.5	398	398	410.5
5	285.5	298	298	310.5	310.5	323	323	335.5	335.5	348	348	360.5	360.5	373	373	385.5	385.5	398	398	410.5	410.5	423	435.5
6	310.5	310.5	323	323	335.5	335.5	348	348	360.5	360.5	373	373	385.5	398	398	410.5	410.5	423	423	435.5	435.5	448	448
7	323	335.5	335.5	348	360.5	360.5	373	373	385.5	385.5	398	398	410.5	410.5	423	423	435.5	435.5	448	448	460.5	460.5	473
8	348	360.5	360.5	373	373	385.5	385.5	398	398	410.5	410.5	423	423	435.5	435.5	448	448	460.5	460.5	473	485.5	485.5	498

Dimensions: JSY1000 Series

Type 10/Side Ported (Applicable to ø6 fittings)

EX250

JJ5SY1-10S□ - Stations U/D/B - C6(D)

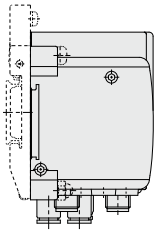

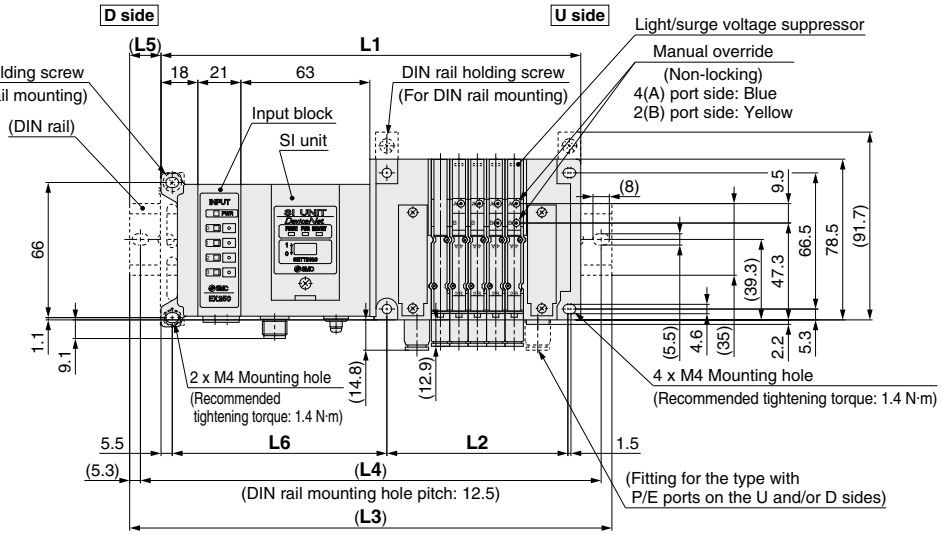

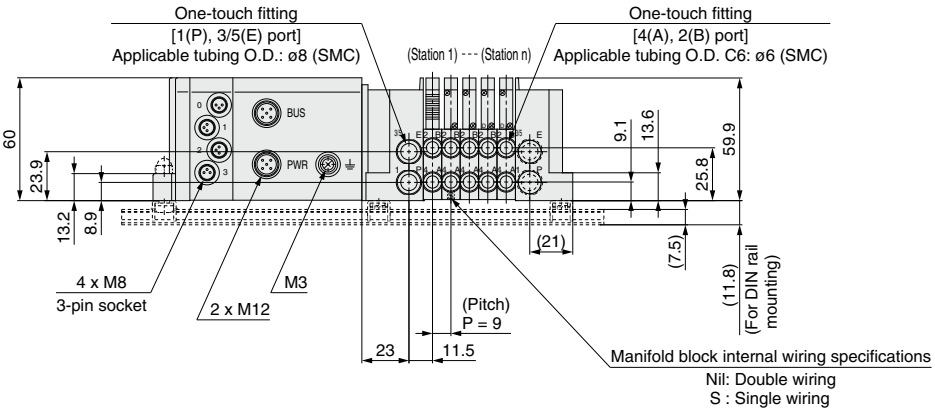

L1 = 9 x n1 + 139 + 21 x n2
L2 = 9 x n1 + 43.4
L4 = L3 – 10.5
L5 = (L3 – L1) / 2
L6 = 21 x n2 + 83.8

n1: Number of valve stations of the JSY1000
n2: Input block stations

∗ These figures show the "JJ5SY1-10SQ1A-05D-C6."
∗ Refer to page 89 for dimensions of external pilot (Made to Order) and silencer.
∗ When CM is selected for mixed A, B port size, refer to page 92 for dimensions.

L3: DIN Rail Overall Length

I/O unit stations (n2) \ Valve stations (n1)	2	3	4	5	6	7	8	9	10	11	12	13	14	15	16	17	18	19	20	21	22	23	24
0	185.5	198	210.5	210.5	223	235.5	235.5	248	260.5	273	273	285.5	298	298	310.5	323	335.5	335.5	348	360.5	360.5	373	385.5
1	210.5	210.5	223	235.5	248	248	260.5	273	285.5	285.5	298	310.5	310.5	323	335.5	348	348	360.5	373	373	385.5	398	410.5
2	223	235.5	248	260.5	260.5	273	285.5	285.5	298	310.5	323	323	335.5	348	360.5	360.5	373	385.5	385.5	398	410.5	423	423
3	248	260.5	273	273	285.5	298	298	310.5	323	335.5	335.5	348	360.5	360.5	373	385.5	398	398	410.5	423	435.5	435.5	448
4	273	285.5	285.5	298	310.5	310.5	323	335.5	348	348	360.5	373	373	385.5	398	410.5	410.5	423	435.5	435.5	448	460.5	473
5	285.5	298	310.5	323	323	335.5	348	360.5	360.5	373	385.5	385.5	398	410.5	423	423	435.5	448	448	460.5	473	485.5	485.5
6	310.5	323	335.5	335.5	348	360.5	360.5	373	385.5	398	398	410.5	423	435.5	435.5	448	460.5	460.5	473	485.5	498	498	510.5
7	335.5	348	348	360.5	373	373	385.5	398	410.5	410.5	423	435.5	435.5	448	460.5	473	473	485.5	498	510.5	510.5	523	535.5
8	360.5	360.5	373	385.5	385.5	398	410.5	423	423	435.5	448	448	460.5	473	485.5	485.5	498	510.5	510.5	523	535.5	548	548

Dimensions: JSY3000 Series

Type 10/Side Ported
EX250

JJ5SY3-10S□ - Stations U/D/B - C6/C8 (D)

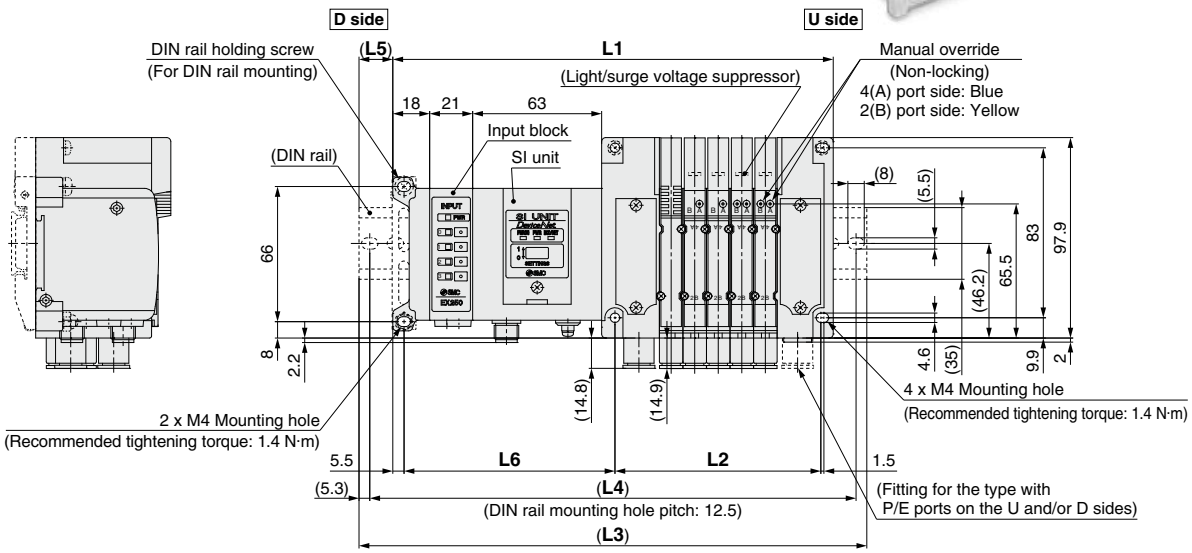

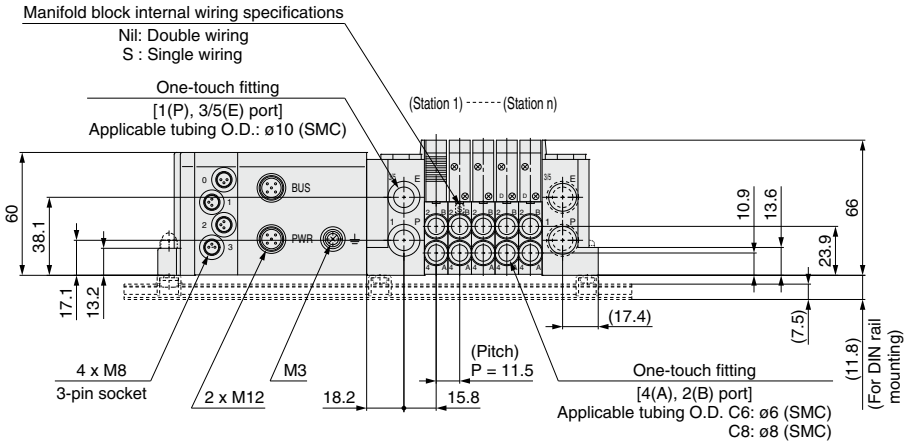

L1 = 11.5 x n1 + 136.6 + 21 x n2
L2 = 11.5 x n1 + 43.1
L4 = L3 − 10.5
L5 = (L3 − L1) / 2
L6 = 21 x n2 + 82

n1: Number of valve stations of the JSY3000
n2: Input block stations

∗ These figures show the "JJ5SY3-10SQ1A-05D-C8."
∗ Refer to page 90 for dimensions of external pilot (Made to Order) and silencer.

L3: DIN Rail Overall Length

I/O unit stations (n2) \ Valve stations (n1)	2	3	4	5	6	7	8	9	10	11	12	13	14	15	16	17	18	19	20	21	22	23	24
0	185.5	198	210.5	223	235.5	248	260.5	273	285.5	298	298	310.5	323	335.5	348	360.5	373	385.5	398	410.5	423	435.5	448
1	210.5	223	235.5	248	260.5	273	273	285.5	298	310.5	323	335.5	348	360.5	373	385.5	398	410.5	423	423	435.5	448	460.5
2	235.5	248	248	260.5	273	285.5	298	310.5	323	335.5	348	360.5	373	385.5	398	398	410.5	423	435.5	448	460.5	473	485.5
3	248	260.5	273	285.5	298	310.5	323	335.5	348	360.5	373	373	385.5	398	410.5	423	435.5	448	460.5	473	485.5	498	510.5
4	273	285.5	298	310.5	323	335.5	348	348	360.5	373	385.5	398	410.5	423	435.5	448	460.5	473	485.5	485.5	498	510.5	523
5	298	310.5	323	323	335.5	348	360.5	373	385.5	398	410.5	423	435.5	448	460.5	460.5	473	485.5	498	510.5	523	535.5	548
6	310.5	323	335.5	348	360.5	373	385.5	398	410.5	423	435.5	435.5	448	460.5	473	485.5	498	510.5	523	535.5	548	560.5	573
7	335.5	348	360.5	373	385.5	398	410.5	410.5	423	435.5	448	460.5	473	485.5	498	510.5	523	535.5	548	560.5	560.5	573	585.5
8	360.5	373	385.5	385.5	398	410.5	423	435.5	448	460.5	473	485.5	498	510.5	523	535.5	535.5	548	560.5	573	585.5	598	610.5

Dimensions: JSY5000 Series

Type 10/Side Ported
EX250

JJ5SY5-10S□ - Stations U/D/B - C10/C12 (D)

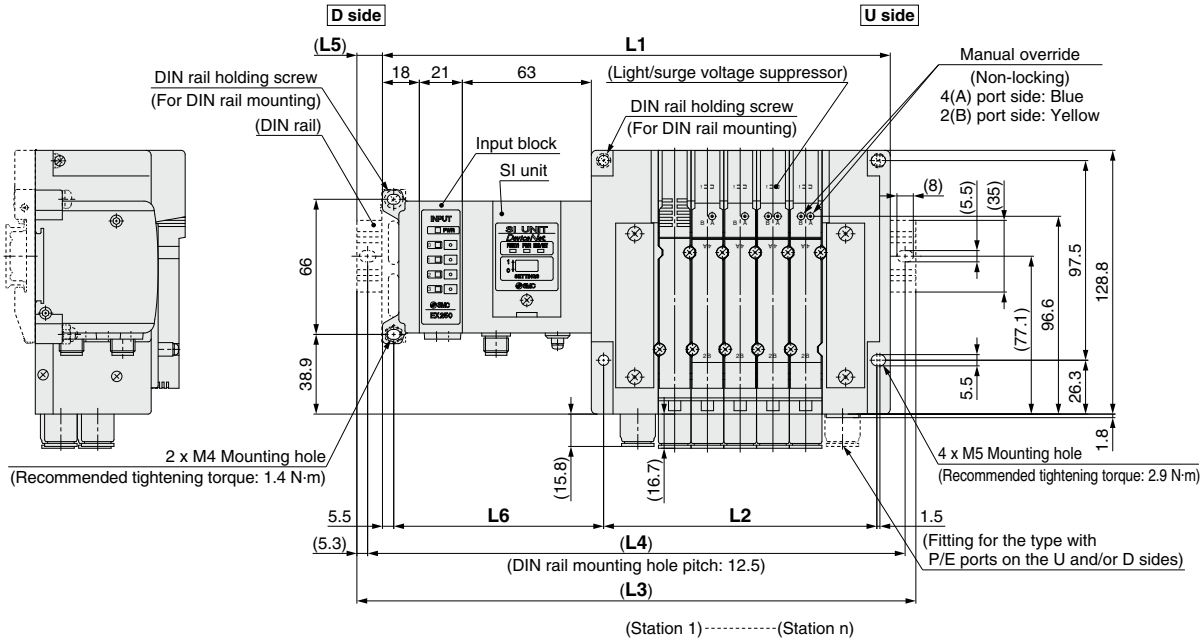

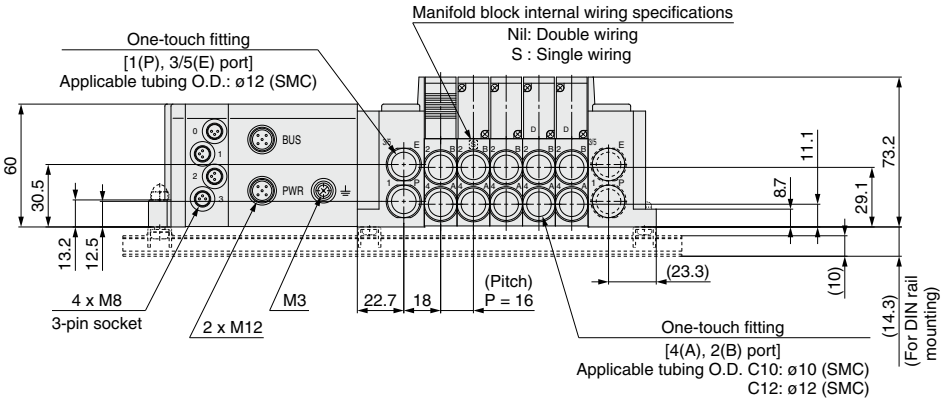

L1 = 16 x n1 + 147 + 21 x n2
L2 = 16 x n1 + 53.5
L4 = L3 − 10.5
L5 = (L3 − L1) / 2
L6 = 21 x n2 + 81.5

n1: Number of valve stations of the JSY5000
n2: Input block stations

∗ These figures show the "JJ5SY5-10SQ1A-05D-C12."
∗ Refer to page 91 for dimensions of external pilot (Made to Order) and silencer.

L3: DIN Rail Overall Length

I/O unit stations (n2) \ Valve stations (n1)	2	3	4	5	6	7	8	9	10	11	12	13	14	15	16	17	18	19	20	21	22	23	24
0	210.5	223	235.5	260.5	273	285.5	310.5	323	335.5	348	373	385.5	398	410.5	435.5	448	460.5	485.5	498	510.5	523	548	560.5
1	235.5	248	260.5	273	298	310.5	323	335.5	360.5	373	385.5	410.5	423	435.5	448	473	485.5	498	523	535.5	548	560.5	585.5
2	248	260.5	285.5	298	310.5	335.5	348	360.5	373	398	410.5	423	448	460.5	473	485.5	510.5	523	535.5	560.5	573	585.5	598
3	273	285.5	298	323	335.5	348	373	385.5	398	410.5	435.5	448	460.5	485.5	498	510.5	523	548	560.5	573	585.5	610.5	623
4	298	310.5	323	335.5	360.5	373	385.5	410.5	423	435.5	448	473	485.5	498	510.5	535.5	548	560.5	585.5	598	610.5	623	648
5	310.5	335.5	348	360.5	373	398	410.5	423	435.5	460.5	473	485.5	510.5	523	535.5	548	573	585.5	598	623	635.5	648	660.5
6	335.5	348	360.5	385.5	398	410.5	435.5	448	460.5	473	498	510.5	523	548	560.5	573	585.5	610.5	623	635.5	660.5	673	685.5
7	360.5	373	385.5	398	423	435.5	448	473	485.5	498	510.5	535.5	548	560.5	585.5	598	610.5	623	648	660.5	673	685.5	710.5
8	373	398	410.5	423	435.5	460.5	473	485.5	510.5	523	535.5	548	573	585.5	598	610.5	635.5	648	660.5	685.5	698	710.5	723

Plug-in Connector Connecting Base

EX260

Type 10
Side Ported

JSY1000/3000/5000 Series

CE RoHS

Internal Pilot

How to Order Manifolds

JJ5SY 3 – 10 S QA – 05 D □ – C6 □

❶ ❷ ❸ ❹ ❺ ❻ ❼ ❽

❶ Series

1	JSY1000
3	JSY3000
5	JSY5000

❸ SI unit (Output polarity, Protocol, Number of outputs, Communication connector)

Symbol (Output polarity) Positive common (NPN)	Negative common (PNP)	Protocol	Number of outputs	Communication connector
0*1		Without SI unit		
QA	QAN	DeviceNet™	32	M12
QB	QBN		16	
NA	NAN	PROFIBUS DP	32	M12
NB	NBN		16	
NC	NCN		32	*3 D-sub
ND	NDN		16	
VA	VAN	CC-Link	32	M12
VB	VBN		16	
DA	DAN	EtherCAT	32	M12
DB	DBN		16	
FA	FAN	PROFINET	32	M12
FB	FBN		16	
EA	EAN	EtherNet/IP™	32	M12
EB	EBN		16	
—*2	GAN	Ethernet POWERLINK	32	M12
—*2	GBN		16	

*1 Without SI unit, the output polarity is decided by the SI unit used.
Ensure a match with the common specification of the valves to be used.
*2 Positive common (NPN) type is not available.
*3 IP40 for the D-sub applicable communication connector specification.
* DIN rail cannot be mounted without SI unit.

❷ Type

10	Side ported

❺ P, E port entry

U	U side (2 to 10 stations)
D	D side (2 to 10 stations)
B	Both sides (2 to 24 stations)

❻ SUP/EXH block assembly

Nil	Internal pilot
S	Internal pilot, Built-in silencer

* 3/5(E) port is plugged for the built-in silencer type.
* When the built-in silencer type is used, keep the exhaust port from coming in direct contact with water or other liquids.
* The external pilot specification should be ordered as Made to Order. For details, refer to page 114.

❼ A, B port size (Metric/One-touch fitting)

Symbol		A, B port	JSY1000	JSY3000	JSY5000
C2	Straight	ø2	●	—	—
C4		ø4	●	—	—
C6		ø6	●	●	—
C8		ø8	—	●	—
C10		ø10	—	—	●
C12		ø12	—	—	●
CM*1		Straight port, mixed sizes	●	●	●
P, E port size (One-touch fittings)			ø8	ø10	ø12

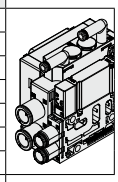

*1 Indicate the sizes on the manifold specification sheet in the case of "CM."
* The JSY1000 manifold pitch for C2 and C4 is 6.5 mm, and 9 mm for C6. When CM is selected, the manifold pitch is different depending on the selected fitting.

For details about the EX260 Integrated Type (For Input/Output) Serial Transmission System, refer to the Web Catalog and the Operation Manual. For details about part numbers of SI units to be mounted, refer to page 104. Please download the Operation Manual via SMC website, https://www.smcworld.com

Made to Order
(Refer to page 114 for details.)

Specification
External pilot (SUP/EXH block assembly)

❹ Valve stations

In the case of the 32-output SI unit

Symbol	Stations	Note
02	2 stations	Double wiring*1
⋮	⋮	
16	16 stations	
02	2 stations	Specified layout*2 (Up to 32 solenoids available)
⋮	⋮	
24	24 stations	

In the case of the 16-output SI unit

Symbol	Stations	Note
02	2 stations	Double wiring*1
⋮	⋮	
08	8 stations	
02	2 stations	Specified layout*2 (Up to 16 solenoids available)
⋮	⋮	
16	16 stations	

*1 Double wiring: 2-position single, double, 3-position, and 4-position valves can be used on all manifold stations.
Use of a 2-position single solenoid will result in an unused control signal. If this is not desired, order with a specified layout.
*2 Specified layout: Indicate the wiring specifications on the manifold specification sheet. (Note that 2-position double, 3-position, and 4-position valves cannot be used where single wiring has been specified.)
* This also includes the number of blanking plates.
* For the product without the SI unit (S0), note the maximum number of solenoids of the SI unit that will be mounted. If the layout is specified, indicate it on the manifold specification sheet.

❽ Mounting and Option

Symbol	Mounting
Nil	Direct mounting
D□	DIN rail mounting

* Enter the number of stations inside □ when it is larger than the number of valve stations. (Refer to "DIN Rail Option" shown below.)
* Refer to page 118 for the fixation of DIN rail mounting type manifold.
* DIN rail mounting (D□) is not available for the product without the SI unit (S0).

DIN Rail Option

Nil	DIN rail mounting (With DIN rail)	
0	DIN rail mounting (Without DIN rail)	
3	For 3 stations	Specify a longer rail than the standard length.
⋮	⋮	
24	For 24 stations	

* Refer to L3 of the dimensions for the DIN rail length and order separately. (Refer to page 110 for the DIN rail part number.)

How to Order Manifold Assembly

Example (JJ5SY3-10SNAN-□)

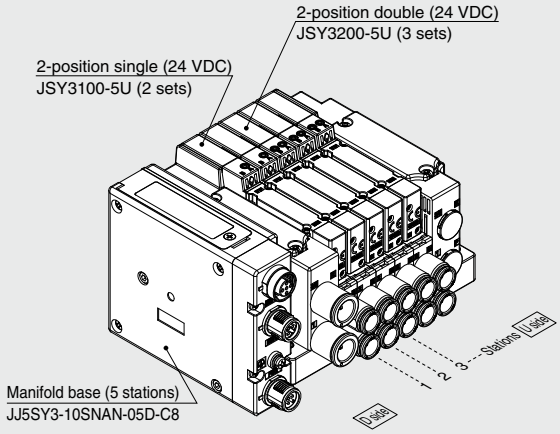

JJ5SY3-10SNAN-05D-C8 ·· **1 set (Type 10 5-station manifold base part no.)**
∗ JSY3100-5U ····· 2 sets (2-position single part no.)
∗ JSY3200-5U ····· 3 sets (2-position double part no.)
The asterisk denotes the symbol for the assembly. Prefix it to the part numbers of the valve, etc.

· The valve arrangement is numbered as the 1st station from the D side.
· Under the manifold part number, state the valves to be mounted in order from the 1st station as shown in the figure. If the arrangement becomes complicated, specify on a manifold specification sheet.

Internal Pilot

How to Order Valves (With mounting screw)

Refer to page 11 for valve specifications.

With power saving circuit

JSY1000 Series **JSY 1 1 0 0 T – 5 Z □**

JSY3000/5000 Series **JSY 3 1 0 0 – 5 Z □**

❶ ❷ ❸ ❹ ❺ ❻

Base mounted

Made to Order (Refer to page 114 for details.)

Specification
With power saving circuit (Continuous duty type): 0.1 W (JSY3000/5000)
External pilot

❶ Series

1	JSY1000
3	JSY3000
5	JSY5000

❷ Type of actuation

1	2-position	Single
2		Double
3	3-position	Closed center
4		Exhaust center
5		Pressure center
A	4-position dual 3-port	N.C./N.C.
B		N.O./N.O.
C		N.C./N.O.

❸ Pilot valve exhaust method

0	Pilot valve individual exhaust

❹ Rated voltage

5	24 VDC

❺ Light/surge voltage suppressor and common specification

Symbol	With light	Surge voltage suppressor	Common specification
U	●	●	Non-polar
Z			Positive common
NZ			Negative common

∗ Select a valve from U or Z when the SI unit output polarity is Nil (positive common). Select a valve from U or NZ when the SI unit output polarity is N (negative common).
∗ Only "Z" and "NZ" types are available for the JSY1000 series.
∗ When non-polar common specification type is selected, take measures to prevent surge voltage. For details, refer to page 117.

❻ Manual override

Nil: Non-locking push type

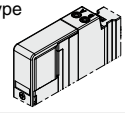

D: Push-turn locking slotted type

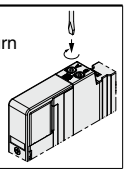

E: Push-turn locking lever type

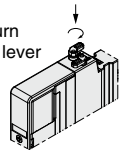

∗ Push-turn locking lever type "E" is not available for the JSY1000.

∗ **When ordering a valve individually, the base gasket is not included.**
Since the base gasket is attached to the manifold, please order the base gasket separately if it is needed for maintenance service.
Refer to page 107 for base gasket and mounting screw part numbers.

⚠ Caution

If the JSY3000/5000 series will be continuously energized, please be sure to use the power saving circuit (continuous duty type). Refer to Made to Order on page 114. Additionally, when it is used at the energizing rate over 50%, please select the product with power saving circuit.
For the JSY1000 series only the power saving circuit is available.

⚠ Protective class class Ⅲ (Mark: ◇Ⅲ)

Dimensions: JSY1000 Series

Type 10/Side Ported (Applicable to ø2 and ø4 fittings)
EX260

JJ5SY1-10S□-Stations U/D/B-C2/C4(D)

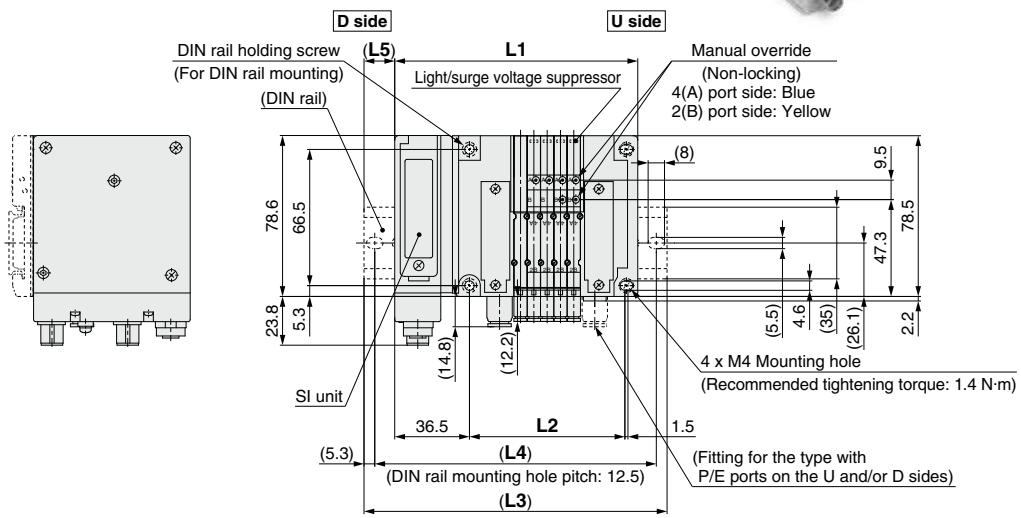

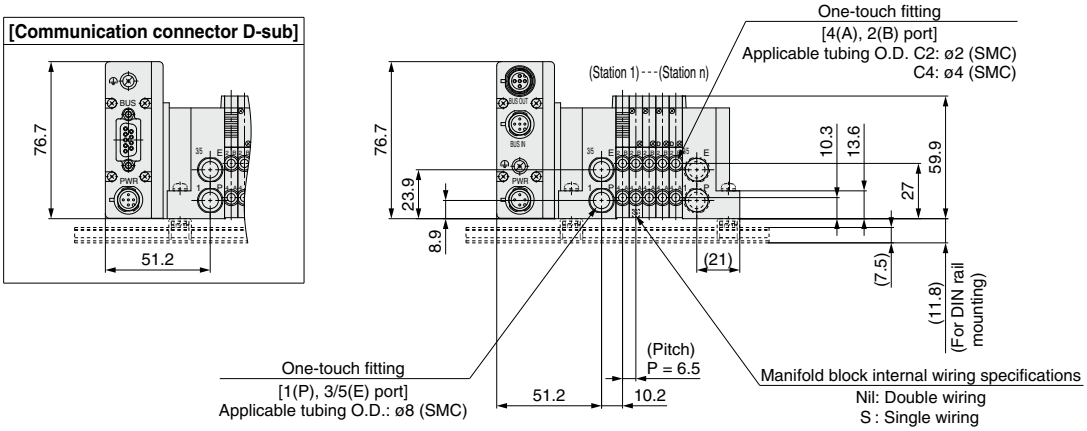

∗ These figures show the "JJ5SY1-10SQA-05D-C4."
∗ Refer to page 89 for dimensions of external pilot (Made to Order) and silencer.
∗ When CM is selected for mixed A, B port size and C6 (9 mm pitch) is included, refer to page 92 for dimensions.

L: Dimensions

n: Stations

L \ n	2	3	4	5	6	7	8	9	10	11	12	13	14	15	16
L1	99.2	105.7	112.2	118.7	125.2	131.7	138.2	144.7	151.2	157.7	164.2	170.7	177.2	183.7	190.2
L2	56.4	62.9	69.4	75.9	82.4	88.9	95.4	101.9	108.4	114.9	121.4	127.9	134.4	140.9	147.4
L3	123	135.5	135.5	148	160.5	160.5	173	173	185.5	185.5	198	198	210.5	210.5	223
L4	112.5	125	125	137.5	150	150	162.5	162.5	175	175	187.5	187.5	200	200	212.5
L5	12	15	12	15	18	15	18	14	17	14	17	14	17	14	17

L \ n	17	18	19	20	21	22	23	24
L1	196.7	203.2	209.7	216.2	222.7	229.2	235.7	242.2
L2	153.9	160.4	166.9	173.4	179.9	186.4	192.9	199.4
L3	223	235.5	235.5	248	248	260.5	260.5	273
L4	212.5	225	225	237.5	237.5	250	250	262.5
L5	13	16	13	16	13	16	13	16

Dimensions: JSY1000 Series

Type 10/Side Ported (Applicable to ø6 fittings)
EX260

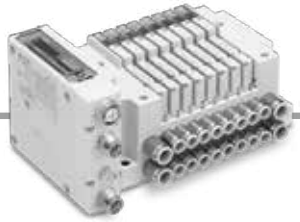

JJ5SY1-10S□-Stations U/D/B-C6(D)

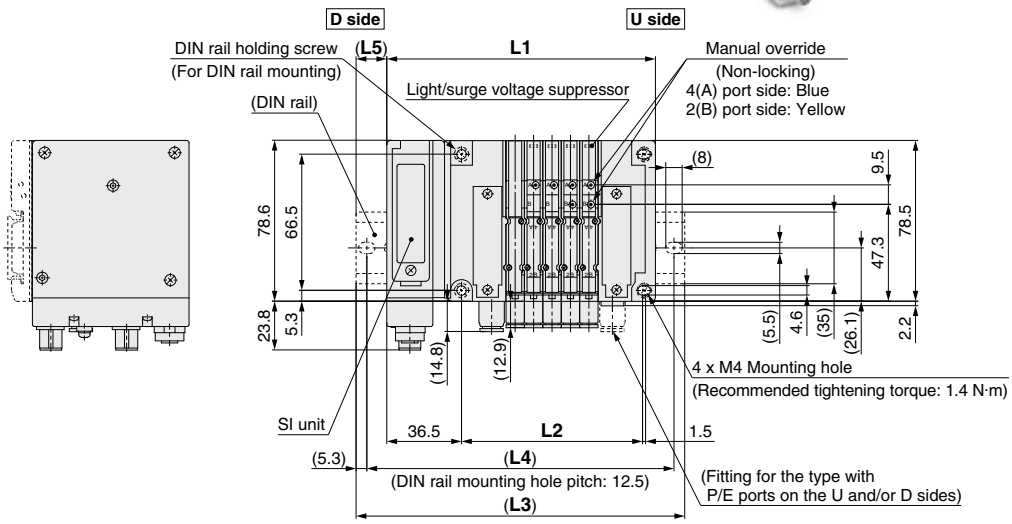

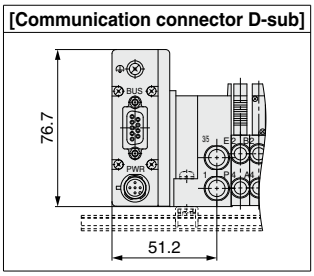

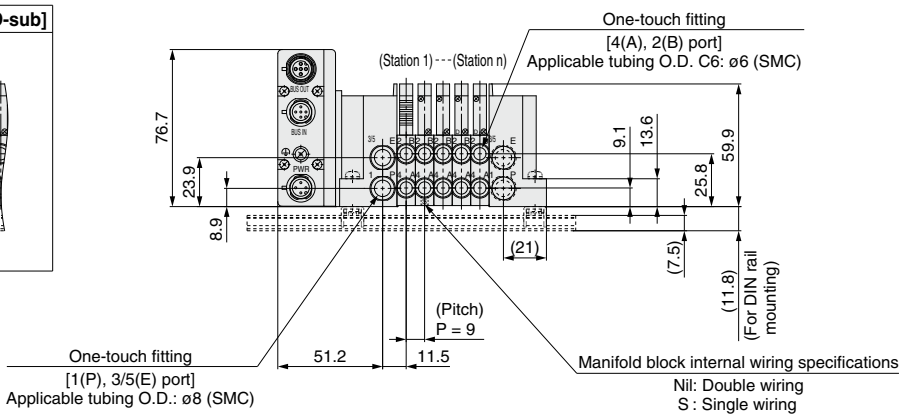

∗ These figures show the "JJ5SY1-10SQA-05D-C6."
∗ Refer to page 89 for dimensions of external pilot (Made to Order) and silencer.
∗ When CM is selected for mixed A, B port size, refer to page 92 for dimensions.

L: Dimensions

n: Stations

L \ n	2	3	4	5	6	7	8	9	10	11	12	13	14	15	16
L1	104.2	113.2	122.2	131.2	140.2	149.2	158.2	167.2	176.2	185.2	194.2	203.2	212.2	221.2	230.2
L2	61.4	70.4	79.4	88.4	97.4	106.4	115.4	124.4	133.4	142.4	151.4	160.4	169.4	178.4	187.4
L3	135.5	148	148	160.5	173	173	185.5	198	210.5	210.5	223	235.5	235.5	248	260.5
L4	125	137.5	137.5	150	162.5	162.5	175	187.5	200	200	212.5	225	225	237.5	250
L5	16	18	13	15	17	12	14	16	17	13	15	16	12	14	15

L \ n	17	18	19	20	21	22	23	24
L1	239.2	248.2	257.2	266.2	275.2	248.2	293.2	302.2
L2	196.4	205.4	214.4	223.4	232.4	241.4	250.4	259.4
L3	273	273	285.5	298	310.5	310.5	323	335.5
L4	262.5	262.5	275	287.5	300	300	312.5	325
L5	17	13	14	16	18	13	15	17

Dimensions: JSY3000 Series

Type 10/Side Ported
EX260

JJ5SY3-10S□-Stations U/D/B-C6/C8(D)

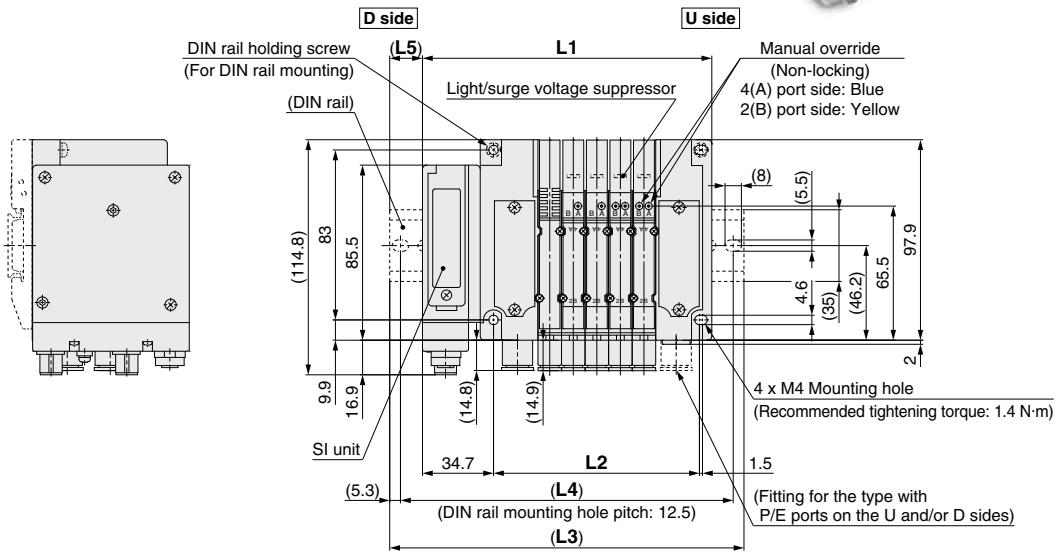

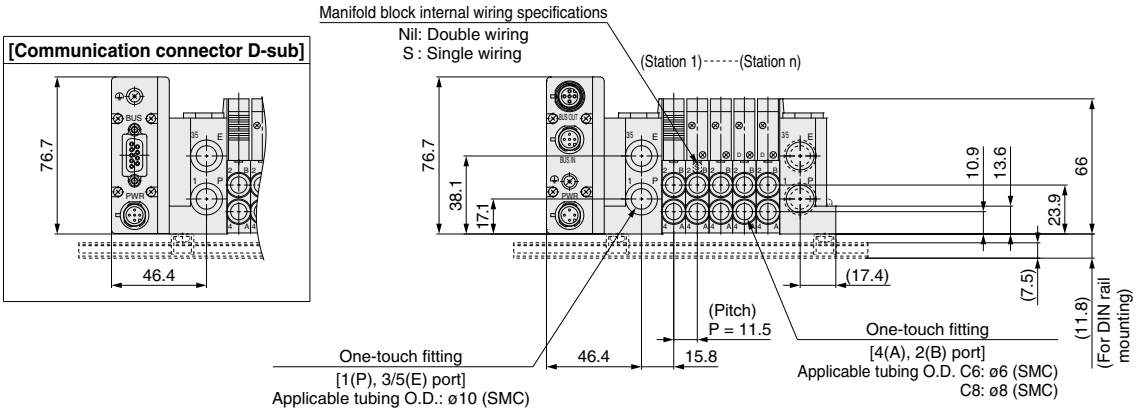

∗ These figures show the "JJ5SY3-10SQA-05D-C8."
∗ Refer to page 90 for dimensions of external pilot (Made to Order) and silencer.

L: Dimensions

n: Stations

L \ n	2	3	4	5	6	7	8	9	10	11	12	13	14	15	16
L1	106.8	118.3	129.8	141.3	152.8	164.3	175.8	187.3	198.8	210.3	221.8	233.3	244.8	256.3	267.8
L2	66.1	77.6	89.1	100.6	112.1	123.6	135.1	146.6	158.1	169.6	181.1	192.6	204.1	215.6	227.1
L3	135.5	148	160.5	173	185.5	198	210.5	210.5	223	235.5	248	260.5	273	285.5	298
L4	125	137.5	150	162.5	175	187.5	200	200	212.5	225	237.5	250	262.5	275	287.5
L5	15	15	16	16	17	17	18	12	12	13	13	14	14	15	15

L \ n	17	18	19	20	21	22	23	24
L1	279.3	290.8	302.3	313.8	325.3	336.8	348.3	359.8
L2	238.6	250.1	261.1	273.1	284.6	296.1	307.6	319.1
L3	310.5	323	335.5	348	360.5	360.5	373	385.5
L4	300	312.5	325	337.5	350	350	362.5	375
L5	16	16	17	17	18	12	13	13

Dimensions: JSY5000 Series

Type 10/Side Ported
EX260

JJ5SY5-10S□-Stations U/D/B-C10/C12(D)

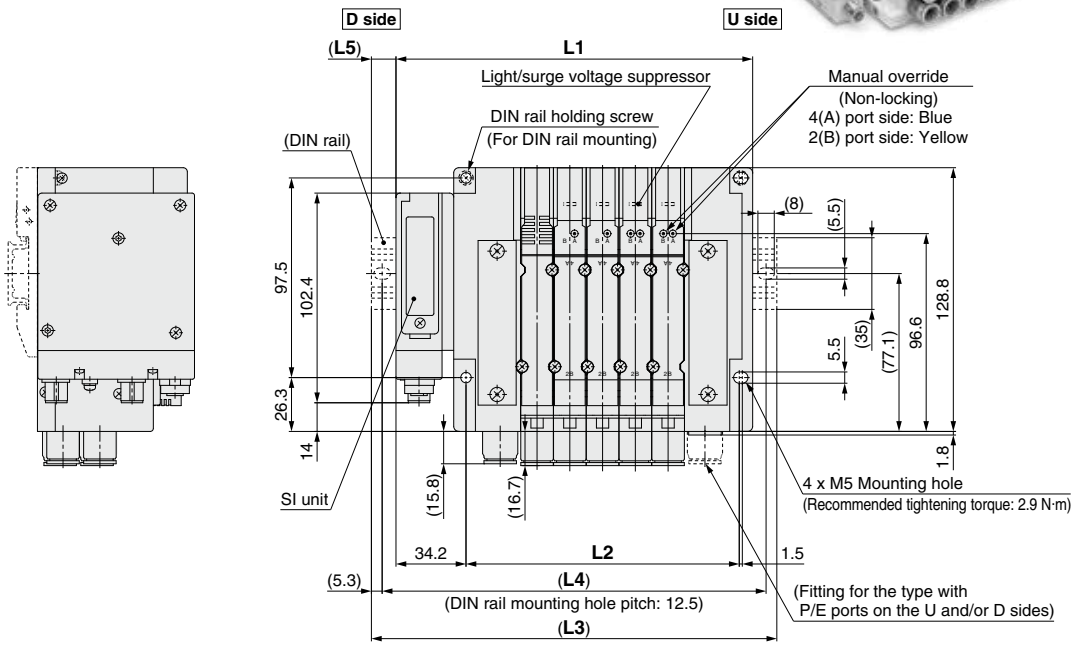

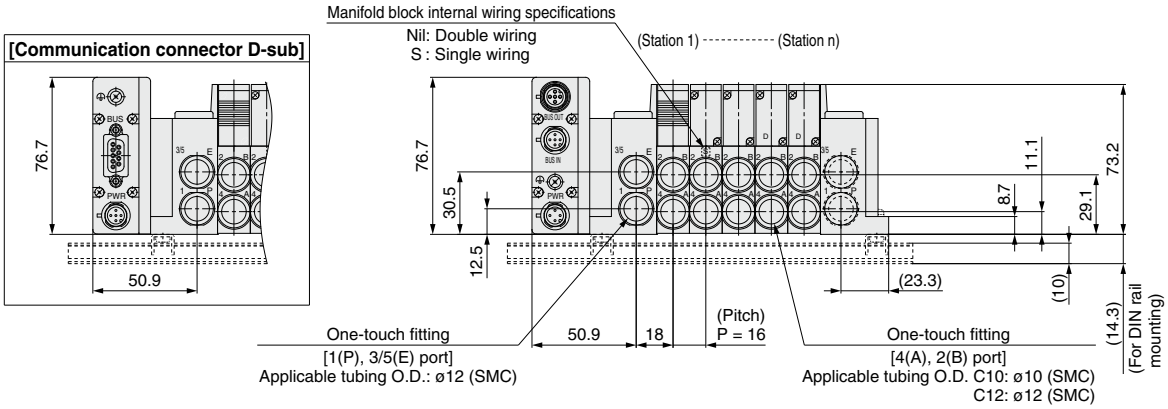

∗ These figures show the "JJ5SY5-10SQA-05D-C12."
∗ Refer to page 91 for dimensions of external pilot (Made to Order) and silencer.

L: Dimensions

n: Stations

L \ n	2	3	4	5	6	7	8	9	10	11	12	13	14	15	16
L1	126.2	142.2	158.2	174.2	190.2	206.2	222.2	238.2	254.2	270.2	286.2	302.2	318.2	334.2	350.2
L2	85.5	101.5	117.5	133.5	149.5	165.5	181.5	197.5	213.5	229.5	245.5	261.5	277.5	293.5	309.5
L3	160.5	173	185.5	198	223	235.5	248	273	285.5	298	310.5	335.5	348	360.5	385.5
L4	150	162.5	175	187.5	212.5	225	237.5	262.5	275	287.5	300	325	337.5	350	375
L5	17	16	14	12	17	15	13	18	16	14	12	17	15	13	18

L \ n	17	18	19	20	21	22	23	24
L1	366.2	382.2	398.2	414.2	430.2	446.2	462.2	478.2
L2	325.5	341.5	357.5	373.5	389.5	405.5	421.5	437.5
L3	398	410.5	423	448	460.5	473	485.5	510.5
L4	387.5	400	412.5	437.5	450	462.5	475	500
L5	16	14	13	17	15	14	12	16

Plug-in Connector Connecting Base

EX120

Type 10
Side Ported

JSY1000/3000/5000 Series

CE RoHS

Internal Pilot

How to Order Manifolds

JJ5SY 3 – 10 S3 Q – 05 D □ – □ □

❶ ❷ ❸ ❹ ❺ ❻ ❼ ❽

❶ Series

1	JSY1000
3	JSY3000
5	JSY5000

❷ Type

10	Side ported

❸ SI unit

0	Without SI unit	
Q	DeviceNet™ (Positive common NPN)	
R1	OMRON CompoBus/S (Positive common NPN)	16 outputs
R2		8 outputs
V	CC-Link (Positive common NPN)	
ZB*1	CompoNet™	Positive common NPN
ZBN*1		Negative common PNP

*1 The communication connector (for the opposite side) is not provided. Please order it separately.
* Ensure a match with the common specification of the valve to be used.

❺ P, E port entry

U	U side (2 to 10 stations)
D	D side (2 to 10 stations)
B	Both sides (2 to 16 stations)

❻ SUP/EXH block

Nil	Internal pilot
S	Internal pilot, Built-in silencer

* 3/5(E) port is plugged for the built-in silencer type.
* The external pilot specification should be ordered as Made to Order. For details, refer to page 114.

Made to Order
(Refer to page 114 for details.)

Specification
External pilot (SUP/EXH block assembly)

❹ Valve stations

Symbol	Stations	Note
02	2 stations	Double wiring*1
⋮	⋮	
08	8 stations	
02	2 stations	Specified layout*2 (Up to 16 solenoids available)
⋮	⋮	
16	16 stations	

*1 Double wiring: 2-position single, double, 3-position, and 4-position valves can be used on all manifold stations.
Use of a 2-position single solenoid will result in an unused control signal. If this is not desired, order with a specified layout.
*2 Specified layout: Indicate the wiring specifications on the manifold specification sheet. (Note that 2-position double, 3-position, and 4-position valves cannot be used where single wiring has been specified.)
* This also includes the number of blanking plates.
* Since R2 type SI unit has 8 outputs, note that up to 8 solenoids can be accommodated.

❼ A, B port size (Metric/One-touch fitting)

Symbol	A, B port		JSY1000	JSY3000	JSY5000
C2	Straight	ø2	●	—	—
C4		ø4	●	—	—
C6		ø6	●	●	—
C8		ø8	—	●	—
C10		ø10	—	—	●
C12		ø12	—	—	●
CM*1		Straight port, mixed sizes	●	●	●
P, E port size (One-touch fittings)			ø8	ø10	ø12

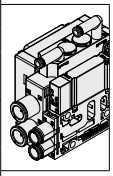

*1 Indicate the sizes on the manifold specification sheet in the case of "CM."
* The JSY1000 manifold pitch for C2 and C4 is 6.5 mm, and 9 mm for C6. When CM is selected, the manifold pitch is different depending on the selected fitting.

❽ Mounting and Option

Symbol	Mounting
Nil	Direct mounting
D□	DIN rail mounting

* Enter the number of stations inside □ when it is larger than the number of valve stations. (Refer to "DIN Rail Option" shown below.)
* Refer to page 118 for the fixation of DIN rail mounting type manifold.

DIN Rail Option

Nil	DIN rail mounting (With DIN rail)	
0	DIN rail mounting (Without DIN rail)	
3	For 3 stations	Specify a longer rail than the standard length.
⋮	⋮	
16	For 16 stations	

* If the DIN rail must be mounted without an SI unit, select D0. Refer to L3 of the dimensions for the DIN rail length and order separately. (Refer to page 110 for the DIN rail part number.)

For details about the EX120 Integrated Type (For Output) Serial Transmission System, refer to the Web Catalog and the Operation Manual. For details about part numbers of SI units to be mounted, refer to page 105. Please download the Operation Manual via SMC website, https://www.smcworld.com

How to Order Manifold Assembly

Example (JJ5SY3-10S3V-□)

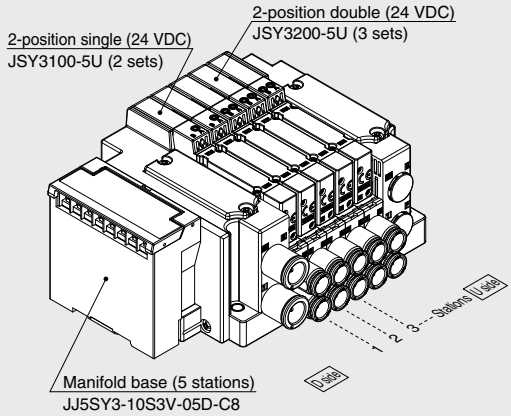

JJ5SY3-10S3V-05D-C8 ··· 1 set (Type 10 5-station manifold base part no.)
∗ JSY3100-5U ····· 2 sets (2-position single part no.)
∗ JSY3200-5U ····· 3 sets (2-position double part no.)
→ The asterisk denotes the symbol for the assembly. Prefix it to the part numbers of the valve, etc.

- The valve arrangement is numbered as the 1st station from the D side.
- Under the manifold part number, state the valves to be mounted in order from the 1st station as shown in the figure. If the arrangement becomes complicated, specify on a manifold specification sheet.

Internal Pilot

How to Order Valves (With mounting screw)

Refer to page 11 for valve specifications.

JSY1000 Series JSY 1 1 0 0 T – 5 Z □

JSY3000/5000 Series JSY 3 1 0 0 – 5 Z □

❶ ❷ ❸ ❹ ❺ ❻

● With power saving circuit

● Base mounted

Made to Order (Refer to page 114 for details.)

Specification
With power saving circuit (Continuous duty type): 0.1 W (JSY3000/5000)
External pilot

❶ Series

1	JSY1000
3	JSY3000
5	JSY5000

❸ Pilot valve exhaust method

0	Pilot valve individual exhaust

❹ Rated voltage

5	24 VDC

⚠ Caution

If the JSY3000/5000 series will be continuously energized, please be sure to use the power saving circuit (continuous duty type). Refer to Made to Order on page 114. Additionally, when it is used at the energizing rate over 50%, please select the product with power saving circuit.
For the JSY1000 series only the power saving circuit is available.

❷ Type of actuation

1	2-position	Single
2		Double
3	3-position	Closed center
4		Exhaust center
5		Pressure center
A	4-position dual 3-port	N.C./N.C.
B		N.O./N.O.
C		N.C./N.O.

❺ Light/surge voltage suppressor and common specification

Symbol	With light	Surge voltage suppressor	Common specification
U	●	●	Non-polar
Z			Positive common
NZ			Negative common

∗ Select a valve from U or Z when the SI unit specification is positive common. Select a valve from U or NZ when the SI unit specification is ZBN (negative common).
∗ Only "Z" and "NZ" types are available for the JSY1000 series.
∗ When non-polar common specification type is selected, take measures to prevent surge voltage. For details, refer to page 117.

❻ Manual override

Nil: Non-locking push type

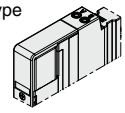

D: Push-turn locking slotted type

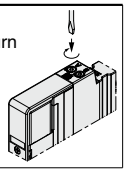

E: Push-turn locking lever type

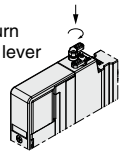

∗ Push-turn locking lever type "E" is not available for the JSY1000.

∗ **When ordering a valve individually, the base gasket is not included.**
Since the base gasket is attached to the manifold, please order the base gasket separately if it is needed for maintenance service.
Refer to page 107 for base gasket and mounting screw part numbers.

⚠ Protective class class Ⅲ (Mark: ⊘)

Dimensions: JSY1000 Series

Type 10/Side Ported (Applicable to ø2 and ø4 fittings)
EX120

JJ5SY1-10S3□-Stations U/D/B-C2/C4(D)

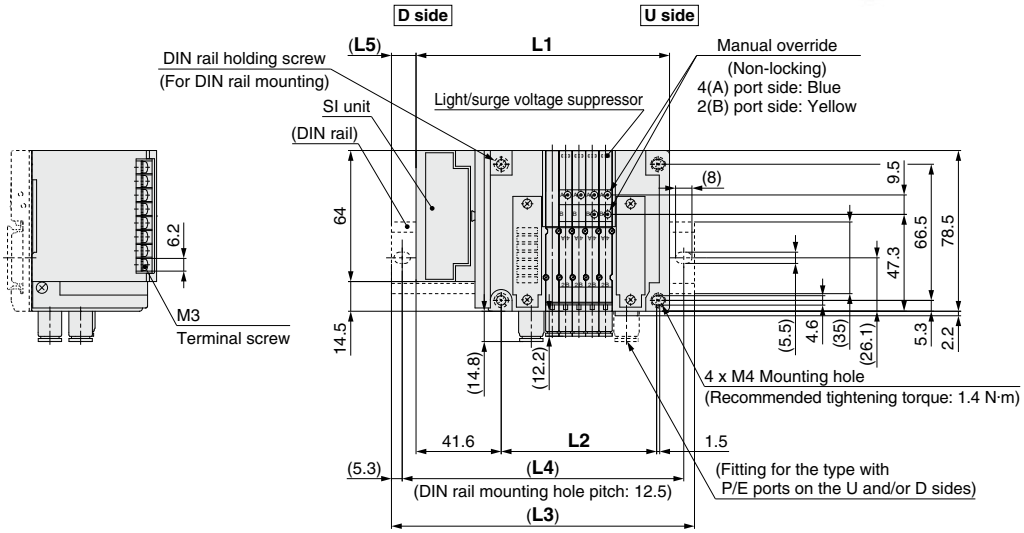

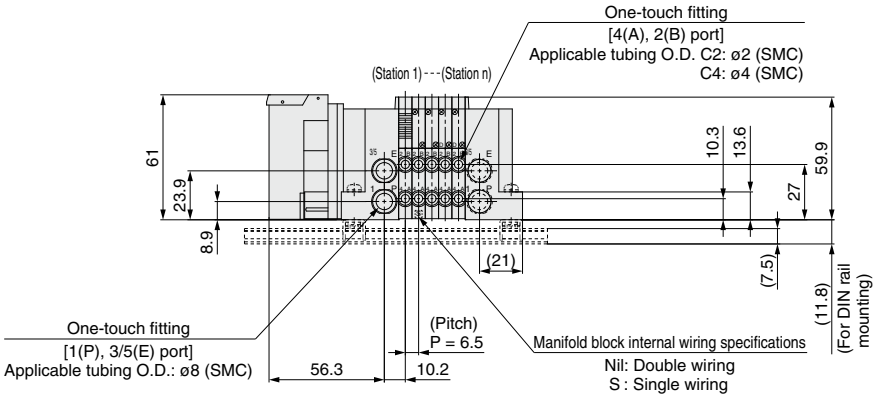

∗ These figures show the "JJ5SY1-10S3V-05D-C4."
∗ Refer to page 89 for dimensions of external pilot (Made to Order) and silencer.
∗ When CM is selected for mixed A, B port size and C6 (9 mm pitch) is included, refer to page 92 for dimensions.

L: Dimensions

n: Stations

L \ n	2	3	4	5	6	7	8	9	10	11	12	13	14	15	16
L1	104.3	110.8	117.3	123.8	130.3	136.8	143.3	149.8	156.3	162.8	169.3	175.8	182.3	188.8	195.3
L2	56.4	62.9	69.4	75.9	82.4	88.9	95.4	101.9	108.4	114.9	121.4	127.9	134.4	140.9	147.4
L3	135.5	135.5	148	148	160.5	160.5	173	173	185.5	198	198	210.5	210.5	223	223
L4	125	125	137.5	137.5	150	150	162.5	162.5	175	187.5	187.5	200	200	212.5	212.5
L5	16	12	15	12	15	12	15	12	15	18	14	17	14	17	14

Dimensions: JSY1000 Series

Type 10/Side Ported (Applicable to ø6 fittings)
EX120

JJ5SY1-10S3□ - Stations U/D/B - C6(D)

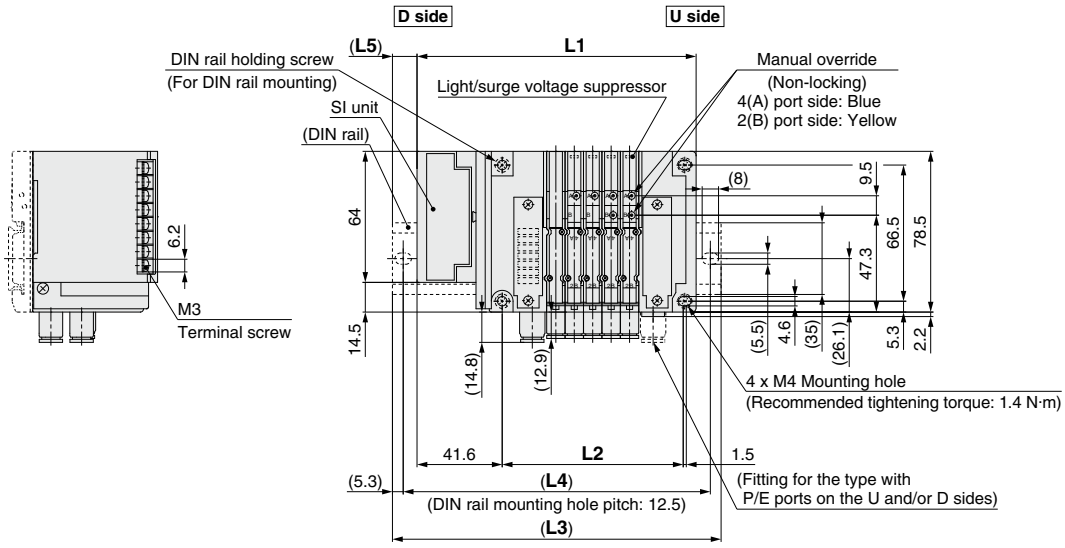

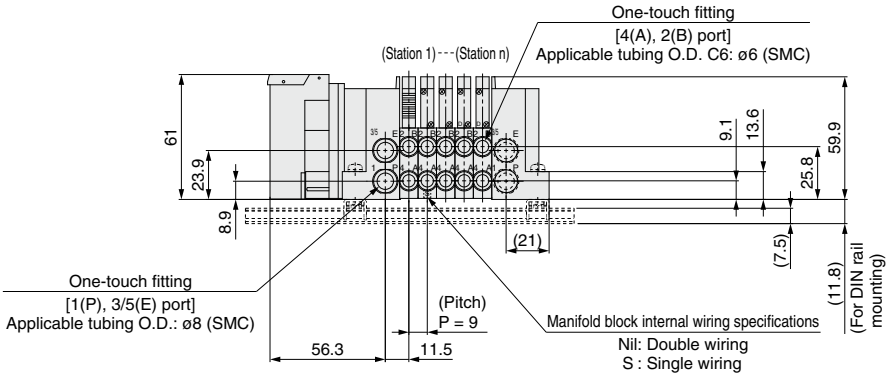

∗ These figures show the "JJ5SY1-10S3V-05D-C6."
∗ Refer to page 89 for dimensions of external pilot (Made to Order) and silencer.
∗ When CM is selected for mixed A, B port size, refer to page 92 for dimensions.

L: Dimensions

n: Stations

L \ n	2	3	4	5	6	7	8	9	10	11	12	13	14	15	16
L1	109.3	118.3	127.3	136.3	145.3	154.3	163.3	172.3	181.3	190.3	199.3	208.3	217.3	226.3	235.3
L2	61.4	70.4	79.4	88.4	97.4	106.4	115.4	124.4	133.4	142.4	151.4	160.4	169.4	178.4	187.4
L3	135.5	148	160.5	160.5	173	185.5	198	198	210.5	223	223	235.5	248	260.5	260.5
L4	125	137.5	150	150	162.5	175	187.5	187.5	200	212.5	212.5	225	237.5	250	250
L5	13	15	17	12	14	16	17	13	15	16	12	14	15	17	13

Dimensions: JSY3000 Series

Type 10/Side Ported
EX120

JJ5SY3-10S3□ - Stations U/D/B - C6/C8 (D)

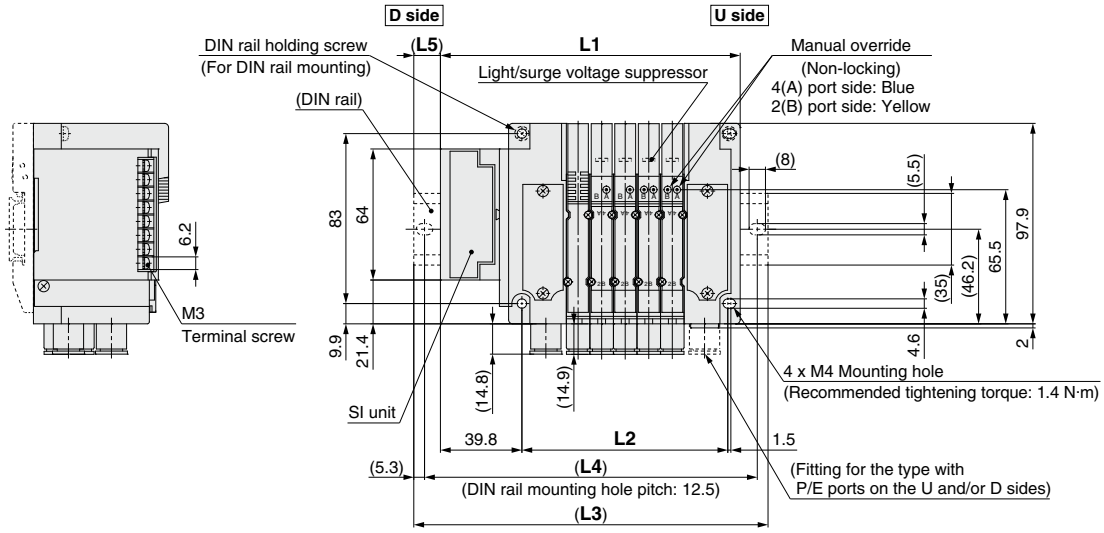

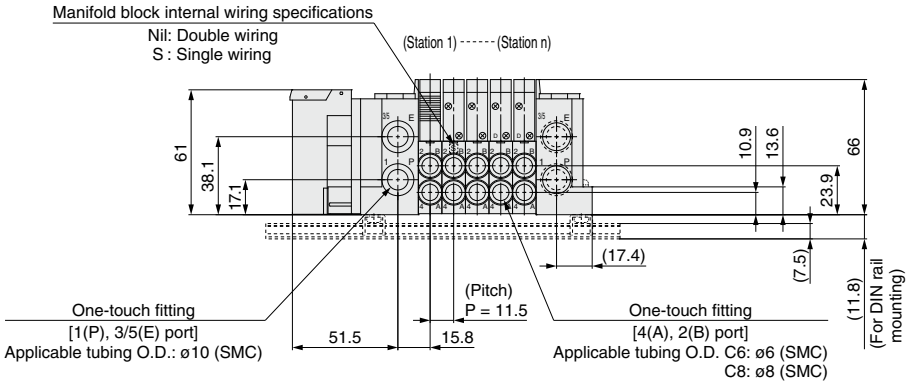

∗ These figures show the "JJ5SY3-10S3V-05D-C8."
∗ Refer to page 90 for dimensions of external pilot (Made to Order) and silencer.

L: Dimensions

n: Stations

L \ n	2	3	4	5	6	7	8	9	10	11	12	13	14	15	16
L1	111.9	123.4	134.9	146.4	157.9	169.4	180.9	192.4	203.9	215.4	226.9	238.4	249.9	261.4	272.9
L2	66.1	77.6	89.1	100.6	112.1	123.6	135.1	146.6	158.1	169.6	181.1	192.6	204.1	215.6	227.1
L3	135.5	148	160.5	173	185.5	198	210.5	223	235.5	248	260.5	273	273	285.5	298
L4	125	137.5	150	162.5	175	187.5	200	212.5	225	237.5	250	262.5	262.5	275	287.5
L5	12	12	13	13	14	14	15	15	16	16	17	17	12	12	13

Dimensions: JSY5000 Series

Type 10/Side Ported
EX120

JJ5SY5-10S3□ - Stations U/D/B - C10/C12 (D)

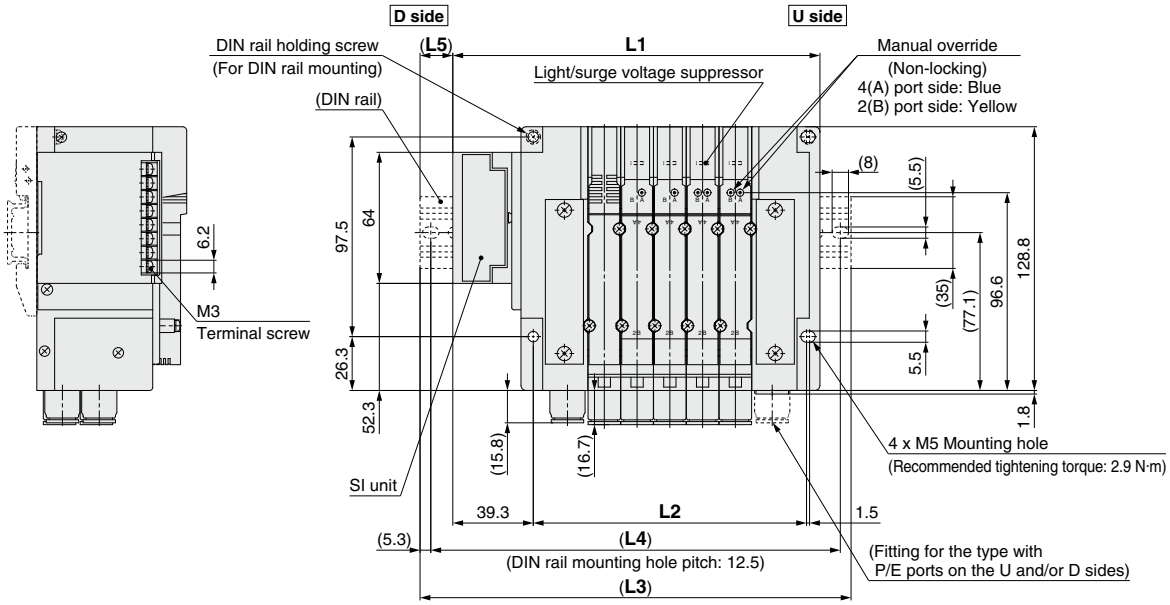

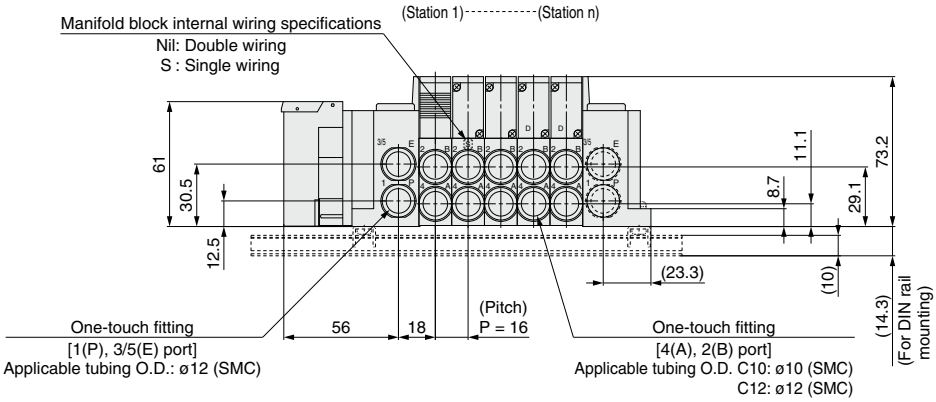

∗ These figures show the "JJ5SY5-10S3V-05D-C12."
∗ Refer to page 91 for dimensions of external pilot (Made to Order) and silencer.

L: Dimensions

n: Stations

L \ n	2	3	4	5	6	7	8	9	10	11	12	13	14	15	16
L1	131.3	147.3	163.3	179.3	195.3	211.3	227.3	243.3	259.3	275.3	291.3	307.3	323.3	339.3	355.3
L2	85.5	101.5	117.5	133.5	149.5	165.5	181.5	197.5	213.5	229.5	245.5	261.5	277.5	293.5	309.5
L3	160.5	173	198	210.5	223	235.5	260.5	273	285.5	310.5	323	335.5	348	373	385.5
L4	150	162.5	187.5	200	212.5	225	250	262.5	275	300	312.5	325	337.5	362.5	375
L5	15	13	17	16	14	12	17	15	13	18	16	14	12	17	15

Common Dimensions

Type 10/Side Ported
External Pilot, Built-in Silencer

Dimensions: JSY1000 Series

JJ5SY1-10□-Stations U/D/B (S, R) - C2/C4/C6 (D)

External pilot (Made to Order)
P, E port entry: D

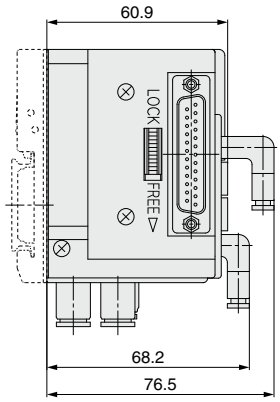

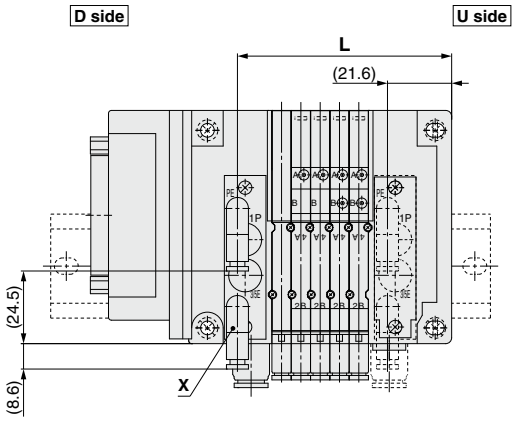

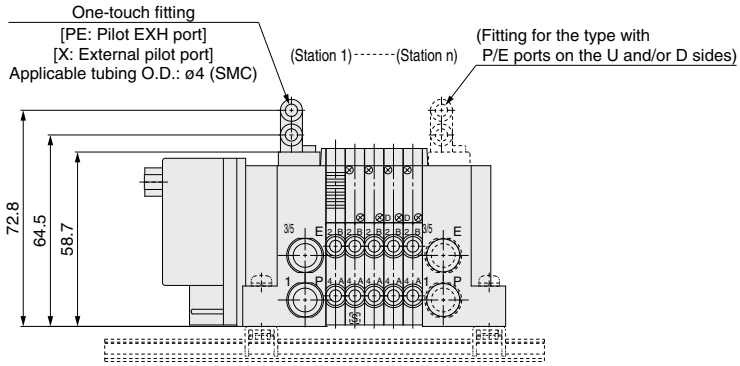

Built-in silencer
<Internal pilot>
P, E port entry: D

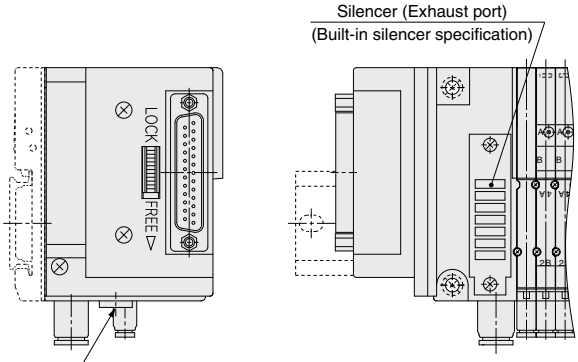

Calculation formula for L dimensions

L = 6.5 x n1 + 9 x n2 + 39.6

n1: Number of 6.5 mm pitch manifold block stations (Applicable fitting: ø2, ø4)
n2: Number of 9 mm pitch manifold block stations (Applicable fitting: ø6)

∗ These figures show the "JJ5SY1-10F2-05DR-C4."

Dimensions: JSY3000 Series

Type 10/Side Ported
External Pilot, Built-in Silencer

JJ5SY3-10□-Stations $^{U}_{D}$ $_{B}$(S, R) -$^{C6}_{C8}$(D)

External pilot (Made to Order)
P, E port entry: D

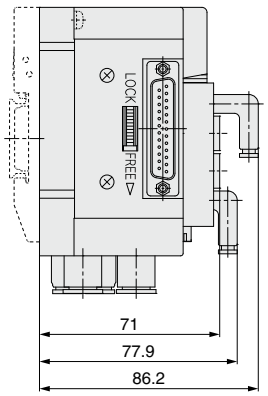

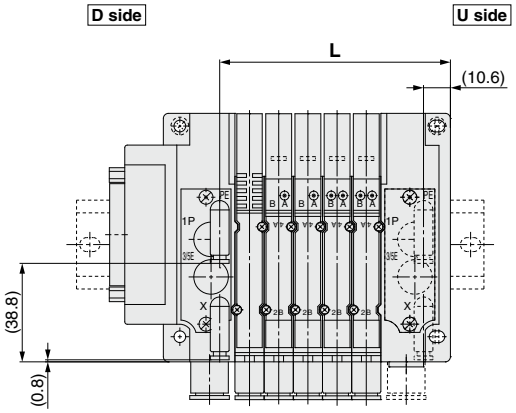

Calculation formula for L dimensions
L = 11.5 x n + 33.4
n: Manifold stations

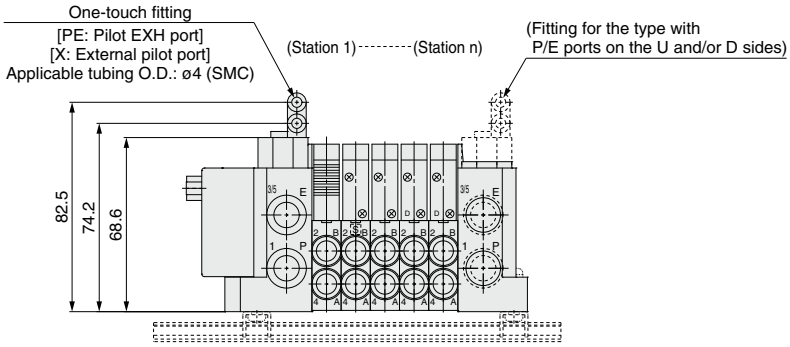

∗ These figures show the "JJ5SY3-10F2-05DR-C8."

Built-in silencer
<Internal pilot>
P, E port entry: D

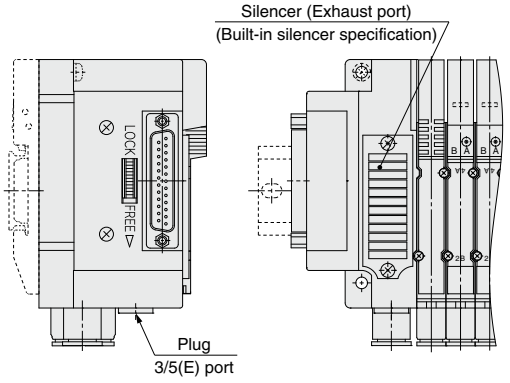

Dimensions: JSY5000 Series

Type 10/Side Ported
External Pilot, Built-in Silencer

JJ5SY5-10□ - Stations U/D/B (S, R) - C10/C12 (D)

External pilot (Made to Order)
P, E port entry: D

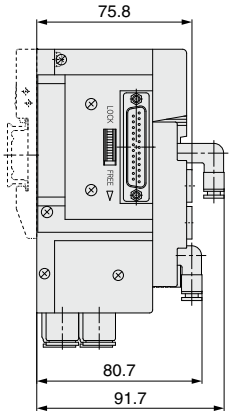

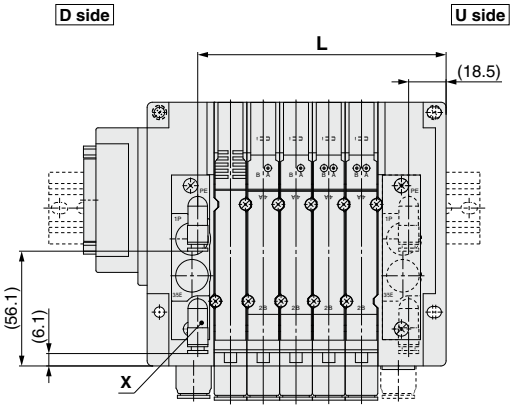

Calculation formula for L dimensions
L = 16 x n + 41.5
n: Manifold stations

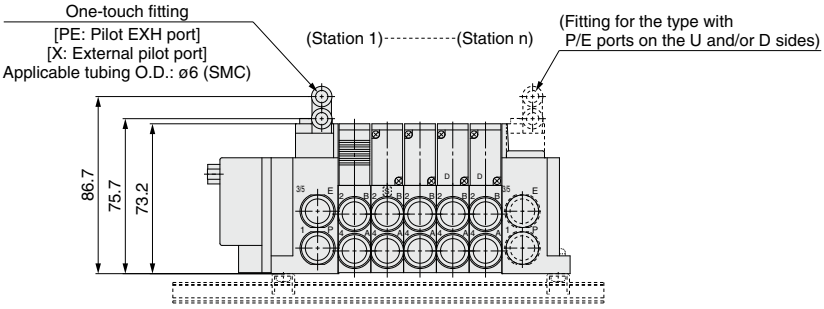

∗ These figures show the "JJ5SY5-10F2-05DR-C12."

Built-in silencer
<Internal pilot>
P, E port entry: D

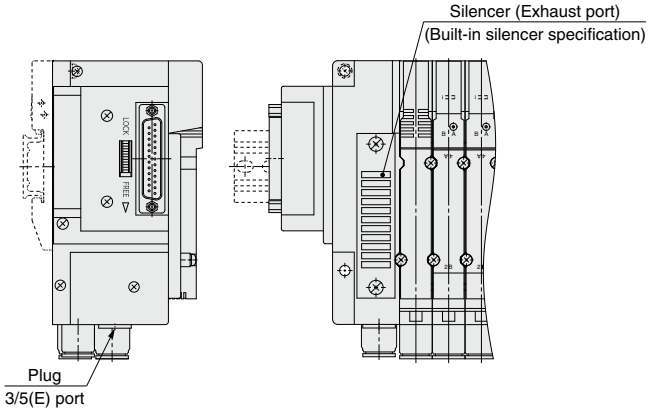

Dimensions: JSY1000 Series

Type 10/Side Ported
Mixed Size, Straight Port Type

JJ5SY1-10□-Stations U/D/B-CM

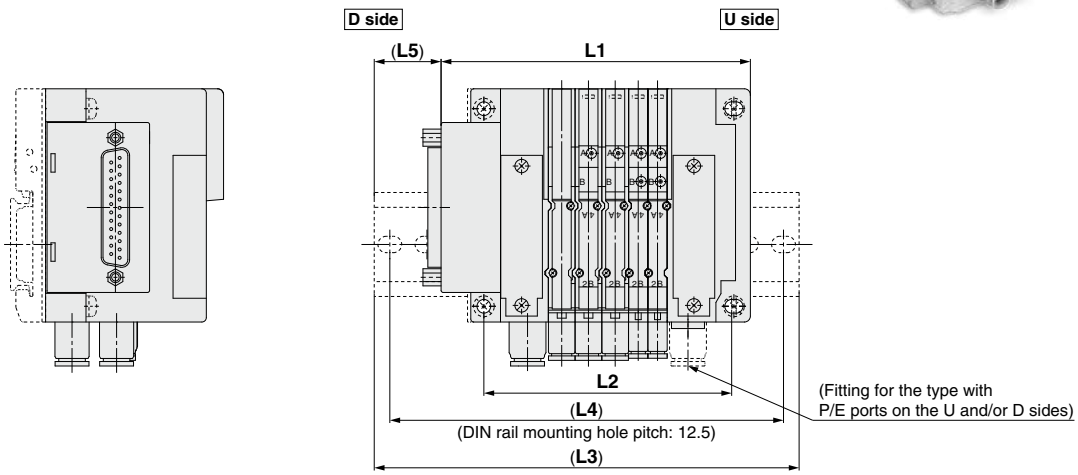

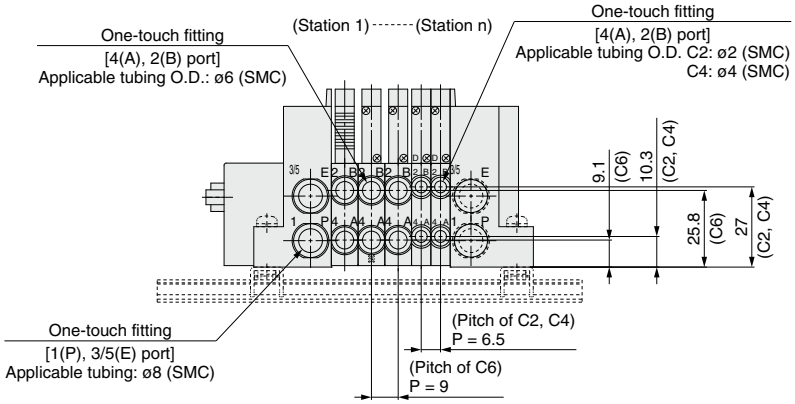

∗ Refer to page 89 for dimensions of external pilot and built-in silencer.
∗ Refer to pages 63 to 66, 73, and 74 for dimensions when L6, b, and d are used for the calculation formula.
∗ Refer to pages below for dimensions that are not specified in each wiring specification.

D-sub connector (IP40/Connector entry direction adjustable) : pp. 21, 22
D-sub connector (IP20/Compact type) : pp. 27, 28
Flat ribbon cable (IP40/Connector entry direction adjustable) : pp. 30, 31
Flat ribbon cable (IP20/Compact type) : pp. 34, 35
Spring type terminal block box : pp. 43, 44
Terminal block box : pp. 47, 48
Lead wire : pp. 55, 56
EX600 : pp. 63 to 66
EX250 : pp. 73, 74
EX260 : pp. 79, 80
EX120 : pp. 85, 86

Calculation formula for dimensions

L1 = 6.5 x n1 + 9 x n2 + a + b x n3
L2 = 6.5 x n1 + 9 x n2 + 43.4
M = {(L1 + c) / 12.5} + 1 Decimal fractions are truncated.
L3 = 12.5 x M + 23
L4 = L3 – 10.5
L5 = (L3 – L1 + c) / 2
L6 = b x n3 + d

n1: Number of 6.5 mm pitch manifold block stations (Applicable fittings: ø2, ø4)
n2: Number of 9 mm pitch manifold block stations (Applicable fittings: ø6)
n3: Number of I/O units or input block stations

Coefficient	a	b	c	d
D-sub connector (IP20/Compact type)	64.1	—	6.1	—
D-sub connector/Flat ribbon cable (IP40/Connector entry direction adjustable)	83	—	6.1	—
Flat ribbon cable (IP20/Compact type)	59.1	—	11.2	—
Spring type terminal block box	125.5	—	—	—
Terminal block box	146.8	—	—	—
Lead wire	94.5	—	—	—
Serial transmission: EX600 (M12 connector)	139	47	—	83.8
Serial transmission: EX600 (7/8 inch connector)	155.5	47	—	83.8
Serial transmission: EX250	139	21	—	83.8
Serial transmission: EX260	86.2	—	—	—
Serial transmission: EX120	91.3	—	—	—

∗ FW [D-sub connector (IP67)] is not available for the JSY1000.

JSY1000/3000/5000 Series Type 10

Connector Connecting Base Manifold Exploded View

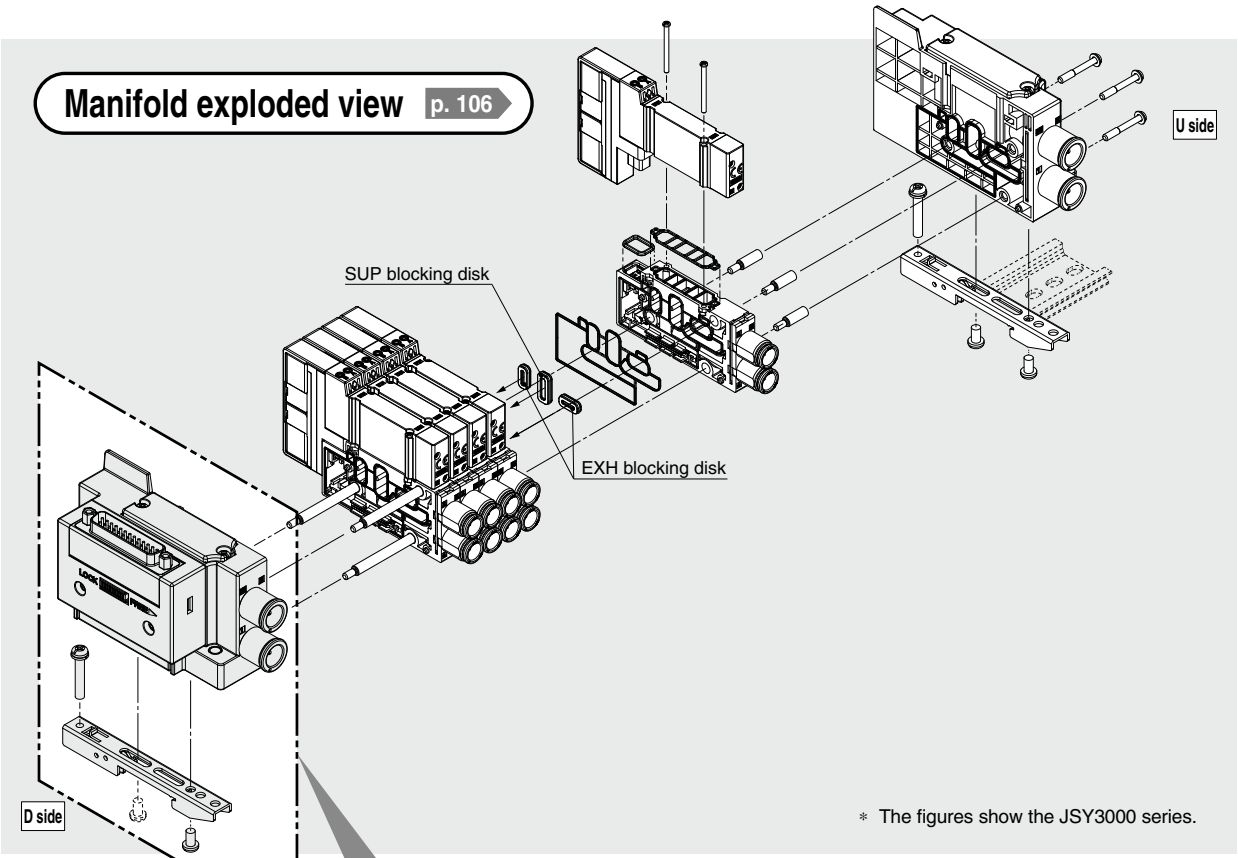

Wiring

D-sub Connector/Flat Ribbon Cable (IP40/Connector Entry Direction Adjustable) p. 95 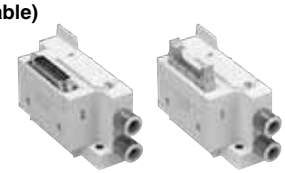	**D-sub Connector (IP67) (For JSY3000/5000)** p. 96	**D-sub Connector/Flat Ribbon Cable (IP20/Compact Type)** p. 97 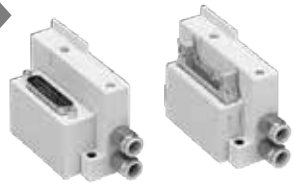
Terminal Block Box p. 98 Spring type (Compact type) p. 99	**Lead Wire** p. 100	**EX600** p. 101 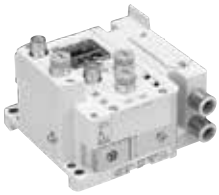
EX250 p. 103 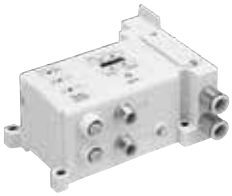	**EX260** p. 104	**EX120** p. 105

Wiring

D-sub Connector/Flat Ribbon Cable (IP40/Connector Entry Direction Adjustable)

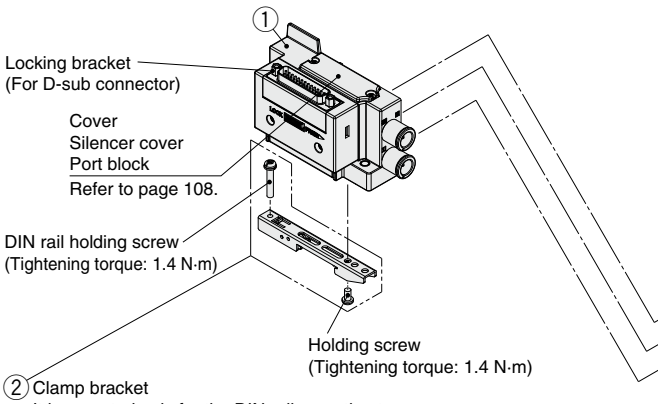

② Clamp bracket
It is mounted only for the DIN rail mounting type.
The holding screw of the clamp bracket is tightened at one point (for the JSY3000).
∗ The clamp bracket fixing method for the JSY1000 is different depending on wiring. Refer to page 119.

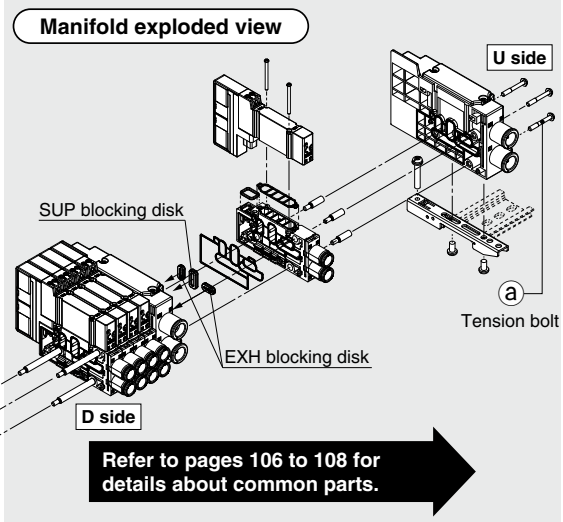

Manifold Parts Nos.

① SUP/EXH block assembly

JSY 3 1M − 1P − 3 A □ 1 − C10 □

Series

1	JSY1000
3	JSY3000
5	JSY5000

SUP/EXH block assembly

3	D-sub connector (25 pins)
4	Flat ribbon cable (26 pins)
5	Flat ribbon cable (20 pins)
6	Flat ribbon cable (10 pins)

Pilot, Silencer type

Symbol	Pilot type		Built-in silencer
	Internal	External (Made to Order)	
Nil	●	—	—
S	●	—	●
R	—	●	—

∗ 3/5(E) port is plugged for the built-in silencer type.

Connector entry direction

1	Upward
2	Lateral

Mounting

Nil	Direct mounting
D0	DIN rail mounting (Without DIN rail)

P, E port size (One-touch fittings)

Symbol	P, E port	JSY1000	JSY3000	JSY5000
C8	ø8 One-touch fitting	●	—	—
C10	ø10 One-touch fitting	—	●	—
C12	ø12 One-touch fitting	—	—	●
00∗1	Plug	●	●	●

∗1 Can be selected when the pilot, silencer type symbol is "Nil" or "S." Not available for "R" type.

SUP/EXH block assembly (D side) accessories and the number of accessories

Accessories	JSY1000 JSY3000	JSY5000
ⓐ **Tension bolt**	None∗1	3 pcs.

∗1 Since the nuts are embedded in the SUP/EXH block.

② Clamp bracket

Series	Part no.
JSY1000	JSY11M-15P-1A
JSY3000	SY30M-15-1A
JSY5000	SY50M-15-1A

∗ Part number is for one piece.

Wiring

D-sub Connector (IP67)

(For JSY3000/5000)

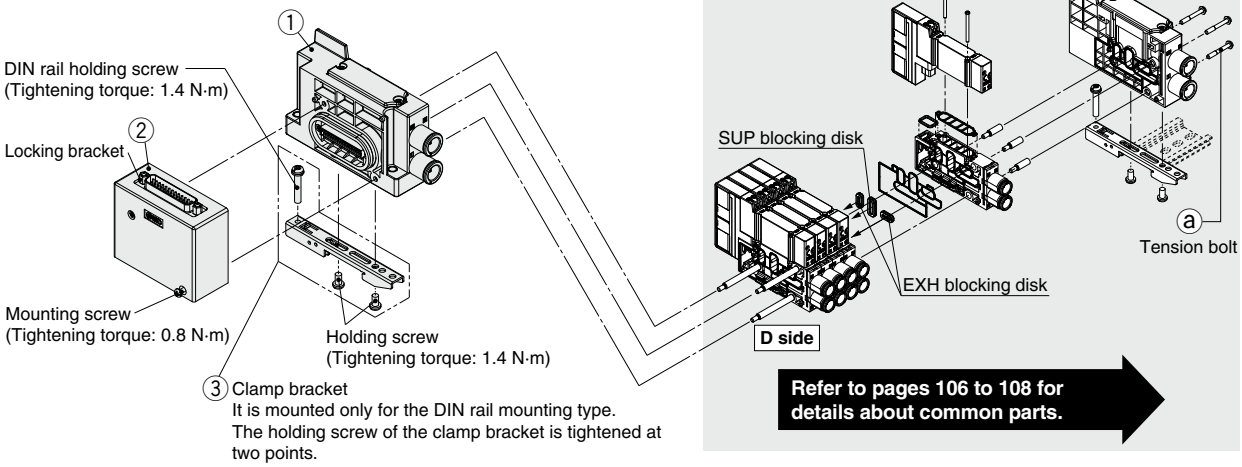

Manifold Parts Nos.

① SUP/EXH block assembly

JSY 3 1M − 1P − 1A □ − C10 □

Series

3	JSY3000
5	JSY5000

Mounting

Nil	Direct mounting
D0	DIN rail mounting (Without DIN rail)

Pilot, Silencer type

Symbol	Pilot type		Built-in silencer
	Internal	External (Made to Order)	
Nil	●	—	—
S	●	—	●
R	—	●	—

∗ 3/5(E) port is plugged for the built-in silencer type.

P, E port size (One-touch fittings)

Symbol	P, E port	JSY3000	JSY5000
C10	ø10 One-touch fitting	●	—
C12	ø12 One-touch fitting	—	●
00∗1	Plug	●	●

∗1 Can be selected when the pilot, silencer type symbol is "Nil" or "S." Not available for "R" type.

SUP/EXH block assembly (D side) accessories and the number of accessories

Accessories	JSY3000	JSY5000
ⓐ Tension bolt	None∗1	3 pcs.

∗1 Since the nuts are embedded in the SUP/EXH block.

② D-sub connector block <for IP67>

Part no.	Connector entry direction
SY30M-14-9A1	Upward
SY30M-14-9A2	Lateral

③ Clamp bracket

Series	Part no.
JSY3000	SY30M-15-1A
JSY5000	SY50M-15-1A

∗ Part number is for one piece.

Wiring

D-sub Connector/Flat Ribbon Cable (IP20/Compact Type)

(For JSY1000/3000)

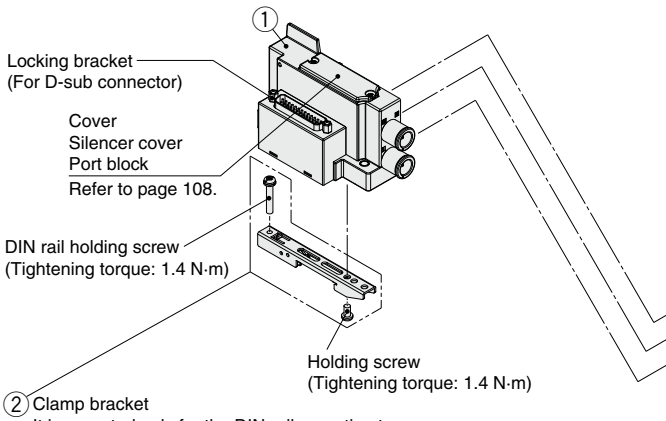

② Clamp bracket
It is mounted only for the DIN rail mounting type.
The holding screw of the clamp bracket is tightened at one point (for the JSY3000).
∗ The clamp bracket fixing method for the JSY1000 is different depending on wiring. Refer to page 119.

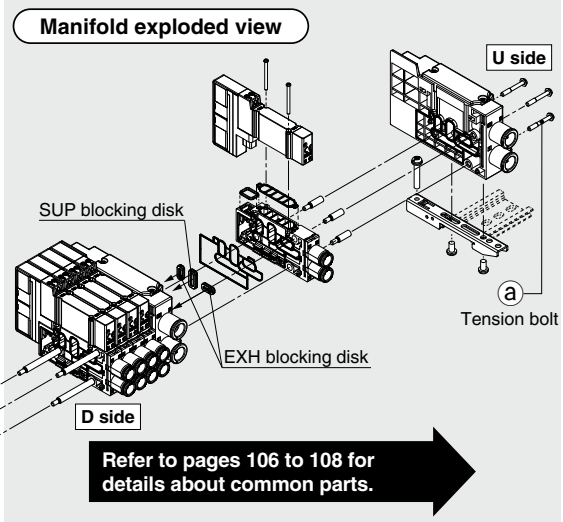

Manifold Parts Nos.

① SUP/EXH block assembly

JSY 3 1M − 1P − 9 A □ 1 − C10 □

Series

1	JSY1000
3	JSY3000

Mounting

Nil	Direct mounting
D0	DIN rail mounting (Without DIN rail)

SUP/EXH block assembly

9	D-sub connector (25 pins)
10	Flat ribbon cable (26 pins)
11	Flat ribbon cable (20 pins)
12	Flat ribbon cable (10 pins)

P, E port size (One-touch fittings)

Symbol	P, E port	JSY1000	JSY3000
C8	ø8 One-touch fitting	●	—
C10	ø10 One-touch fitting	—	●
00∗1	Plug	●	●

∗1 Can be selected when the pilot, silencer type symbol is "Nil" or "S." Not available for "R" type.

Pilot, Silencer type

Symbol	Pilot type		Built-in silencer
	Internal	External (Made to Order)	
Nil	●	—	—
S	●	—	●
R	—	●	—

∗ 3/5(E) port is plugged for the built-in silencer type.

Connector entry direction

1	Upward
2	Lateral

② Clamp bracket

Series	Part no.
JSY1000	JSY11M-15P-1A
JSY3000	SY30M-15-1A

∗ Part number is for one piece.

Wiring

Spring Type Terminal Block Box

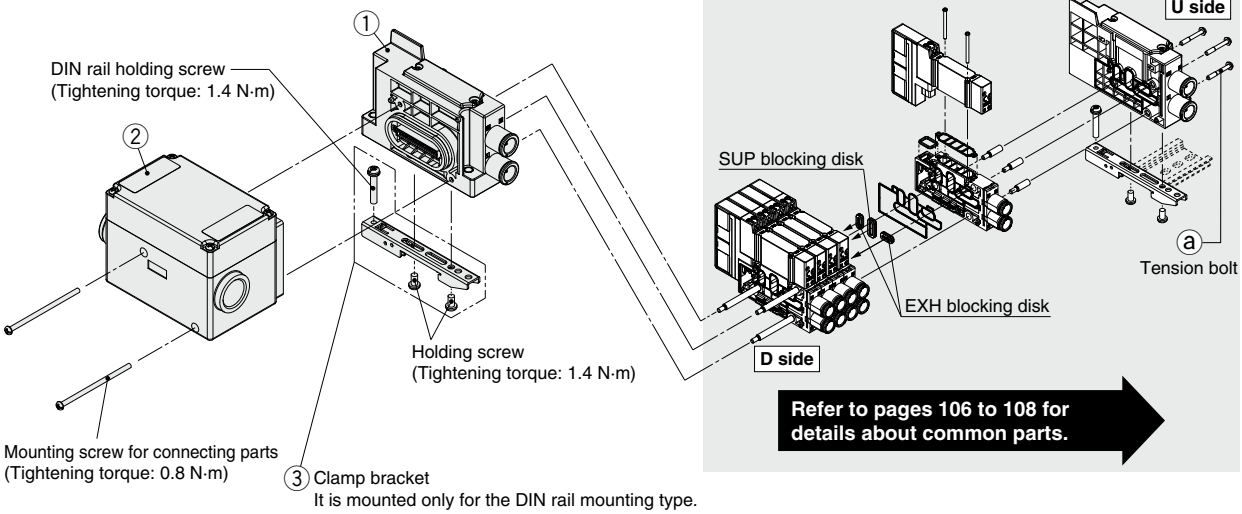

③ Clamp bracket
It is mounted only for the DIN rail mounting type.
The holding screw of the clamp bracket is tightened at two points.
∗ The clamp bracket fixing method for the JSY1000 is different depending on wiring. Refer to page 119.

Manifold Parts Nos.

① SUP/EXH block assembly

JSY 3 1M − 1P − 1A □ − C10 □

Series

1	JSY1000
3	JSY3000
5	JSY5000

Mounting

Nil	Direct mounting
D0	DIN rail mounting (Without DIN rail)

Pilot, Silencer type

Symbol	Pilot type		Built-in silencer
	Internal	External (Made to Order)	
Nil	●	—	—
S	●	—	●
R	—	●	—

∗ 3/5(E) port is plugged for the built-in silencer type.

P, E port size (One-touch fittings)

Symbol	P, E port	JSY1000	JSY3000	JSY5000
C8	ø8 One-touch fitting	●	—	—
C10	ø10 One-touch fitting	—	●	—
C12	ø12 One-touch fitting	—	—	●
00∗1	Plug	●	●	●

∗1 Can be selected when the pilot, silencer type symbol is "Nil" or "S." Not available for "R" type.

SUP/EXH block assembly (D side) accessories and the number of accessories

Accessories	JSY1000 JSY3000	JSY5000
ⓐ Tension bolt	None∗1	3 pcs.

∗1 Since the nuts are embedded in the SUP/EXH block.

② Terminal block assembly

SY30M − 130 − 1A

③ Clamp bracket

Series	Part no.
JSY1000	JSY11M-15P-1A
JSY3000	SY30M-15-1A
JSY5000	SY50M-15-1A

∗ Part number is for one piece.

Wiring

Terminal Block Box

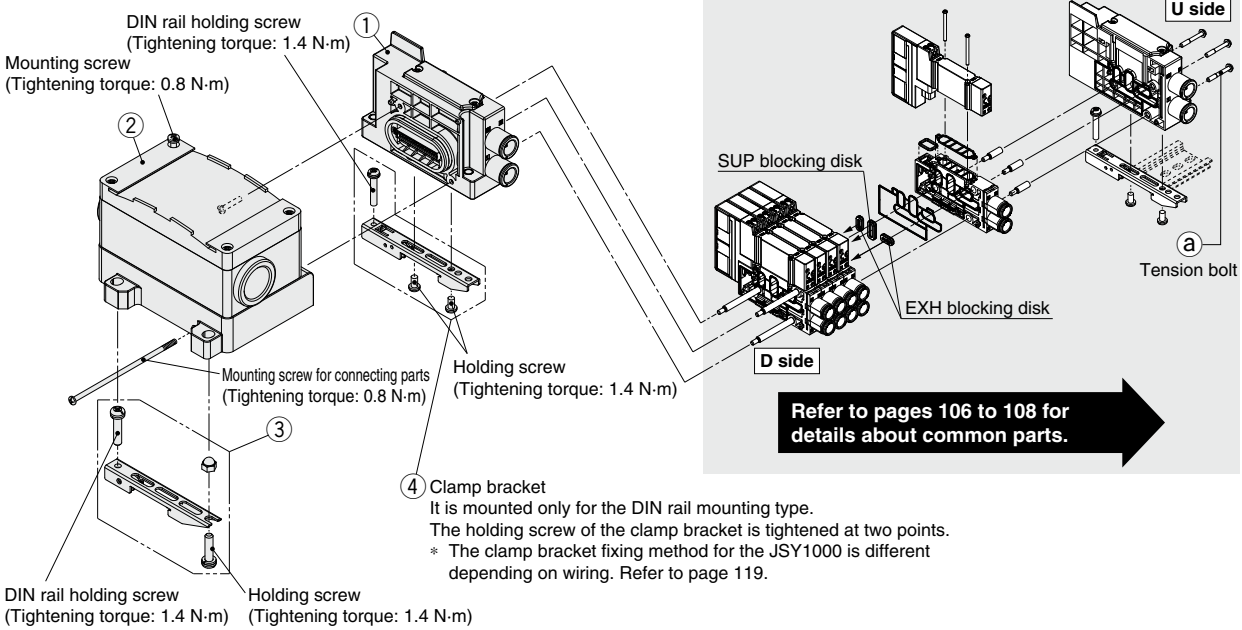

Manifold Parts Nos.

① SUP/EXH block assembly

JSY 3 1M − 1P − 1A □ − C10 □

Series

1	JSY1000
3	JSY3000
5	JSY5000

Mounting

Symbol	Mounting	JSY1000	JSY3000	JSY5000
Nil	Direct mounting	●	●	●
D00	DIN rail mounting (Without DIN rail)	●	—	—
D0	DIN rail mounting (Without DIN rail)	—	●	●

Pilot, Silencer type

Symbol	Pilot type		Built-in silencer
	Internal	External (Made to Order)	
Nil	●	—	—
S	●	—	●
R	—	●	—

∗ 3/5(E) port is plugged for the built-in silencer type.

P, E port size (One-touch fittings)

Symbol	P, E port	JSY1000	JSY3000	JSY5000
C8	ø8 One-touch fitting	●	—	—
C10	ø10 One-touch fitting	—	●	—
C12	ø12 One-touch fitting	—	—	●
00∗1	Plug	●	●	●

∗1 Can be selected when the pilot, silencer type symbol is "Nil" or "S." Not available for "R" type.

SUP/EXH block assembly (D side) accessories and the number of accessories

Accessories	JSY1000 JSY3000	JSY5000
ⓐ Tension bolt	None∗1	3 pcs.

∗1 Since the nuts are embedded in the SUP/EXH block.

② Terminal block box housing assembly

VVQC1000 − T0 − 1

③ Clamp bracket for terminal block box

SY30M − 15 − 4A

④ Clamp bracket

Series	Part no.
JSY1000	JSY11M-15P-2A
JSY3000	SY30M-15-1A
JSY5000	SY50M-15-1A

∗ Part number is for one piece.

Wiring

Lead Wire

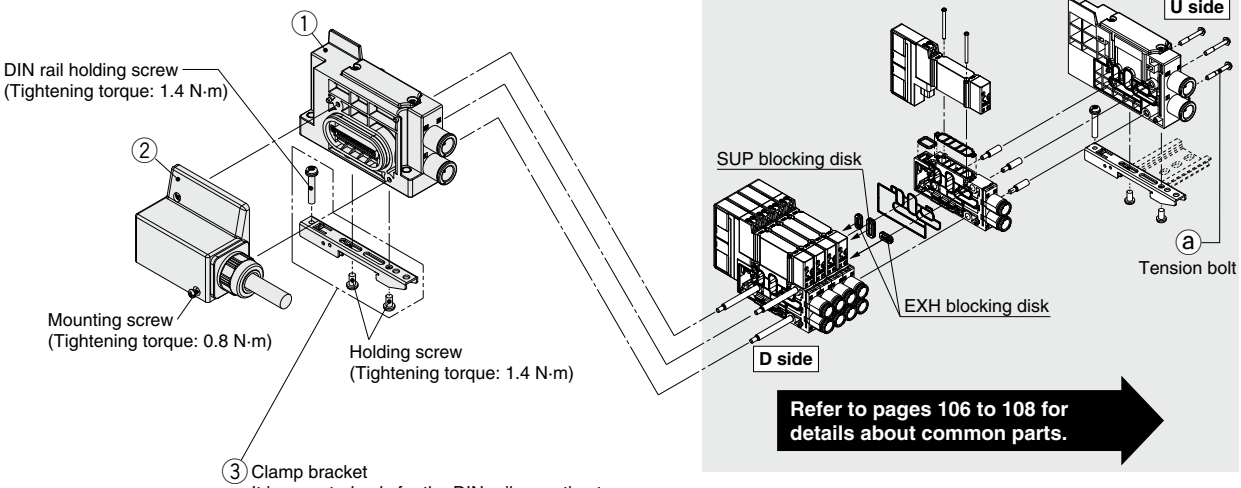

③ Clamp bracket
It is mounted only for the DIN rail mounting type.
The holding screw of the clamp bracket is tightened at two points.
∗ The clamp bracket fixing method for the JSY1000 is different depending on wiring. Refer to page 119.

Manifold Parts Nos.

① SUP/EXH block assembly

JSY 3 1M − 1P − 1A □ − C10 □

Series

1	JSY1000
3	JSY3000
5	JSY5000

Mounting

Nil	Direct mounting
D0	DIN rail mounting (Without DIN rail)

Pilot, Silencer type

Symbol	Pilot type		Built-in silencer
	Internal	External (Made to Order)	
Nil	●	—	—
S	●	—	●
R	—	●	—

∗ 3/5(E) port is plugged for the built-in silencer type.

P, E port size (One-touch fittings)

Symbol	P, E port	JSY1000	JSY3000	JSY5000
C8	ø8 One-touch fitting	●	—	—
C10	ø10 One-touch fitting	—	●	—
C12	ø12 One-touch fitting	—	—	●
00∗1	Plug	●	●	●

∗1 Can be selected when the pilot, silencer type symbol is "Nil" or "S." Not available for "R" type.

SUP/EXH block assembly (D side) accessories and the number of accessories

Accessories	JSY1000 JSY3000	JSY5000
ⓐ Tension bolt	None∗1	3 pcs.

∗1 Since the nuts are embedded in the SUP/EXH block.

② Lead wire connector block assembly

SY30M − 14 − 4A − 1 − 1

Number of cores (Lead wire)

Symbol	Number of cores
1	34
2	17
3	9

Lead wire length [m]

Symbol	Length
1	0.6
2	1.5
3	3

③ Clamp bracket

Series	Part no.
JSY1000	JSY11M-15P-1A
JSY3000	SY30M-15-1A
JSY5000	SY50M-15-1A

∗ Part number is for one piece.

Wiring

EX600

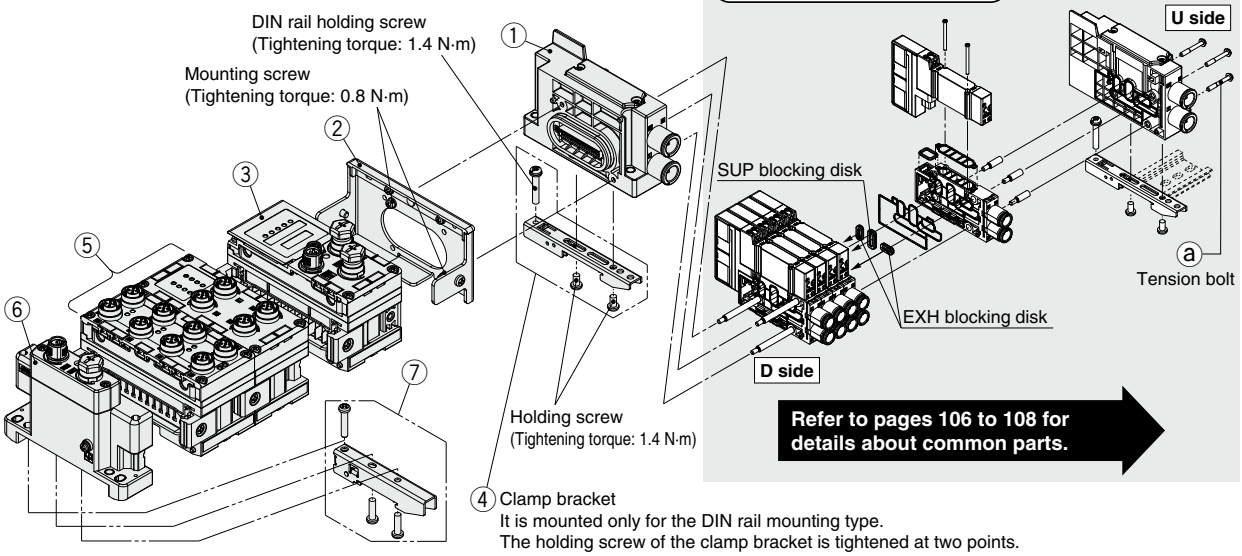

Refer to pages 106 to 108 for details about common parts.

④ Clamp bracket
It is mounted only for the DIN rail mounting type.
The holding screw of the clamp bracket is tightened at two points.
∗ The clamp bracket fixing method for the JSY1000 is different depending on wiring. Refer to page 119.

Manifold Parts Nos.

① SUP/EXH block assembly

JSY 3 1M − 1P − 1A □ − C10 □

Series

1	JSY1000
3	JSY3000
5	JSY5000

Mounting

Symbol	Mounting	JSY1000	JSY3000	JSY5000
Nil	Direct mounting	●	●	●
D00	DIN rail mounting (Without DIN rail)	●	—	—
D0	DIN rail mounting (Without DIN rail)	—	●	●

Pilot, Silencer type

Symbol	Pilot type		Built-in silencer
	Internal	External (Made to Order)	
Nil	●	—	—
S	●	—	●
R	—	●	—

∗ 3/5(E) port is plugged for the built-in silencer type.

P, E port size (One-touch fittings)

Symbol	P, E port	JSY1000	JSY3000	JSY5000
C8	ø8 One-touch fitting	●	—	—
C10	ø10 One-touch fitting	—	●	—
C12	ø12 One-touch fitting	—	—	●
00∗1	Plug	●	●	●

∗1 Can be selected when the pilot, silencer type symbol is "Nil" or "S." Not available for "R" type.

SUP/EXH block assembly (D side) accessories and the number of accessories

Accessories	JSY1000/3000	JSY5000
ⓐ Tension bolt	None∗1	3 pcs.

∗1 Since the nuts are embedded in the SUP/EXH block

② Valve plate

EX600 − ZMV2

∗ With mounting screws (2 pcs. of M4 x 6 and 2 pcs. of M3 x 8)

④ Clamp bracket

Series	Part no.
JSY1000	JSY11M-15P-2A
JSY3000	SY30M-15-1A
JSY5000	SY50M-15-1A

∗ Part number is for one piece.

③ EX600 SI unit

EX600 − S PR 1 □

Protocol

Symbol	Description
PR	PROFIBUS DP
DN	DeviceNet™
MJ	CC-Link
EN	EtherNet/IP™∗1
EC	EtherCAT∗1
PN	PROFINET∗1

∗1 Cannot be communicated with the EX600-HT1-□

Version

Symbol	Description
Nil	When MJ, EN, EC, or PN is selected
A	When PR or DN is selected

Output type

Symbol	Description	Condition
1	PNP (Negative common)	Can be selected by all protocols
2	NPN (Positive common)	Can be selected by all protocols
3	PNP (Negative common) EtherNet/IP™ (2 ports)	Can be selected in the case of EN
4	NPN (Positive common) EtherNet/IP™ (2 ports)	Can be selected in the case of EN

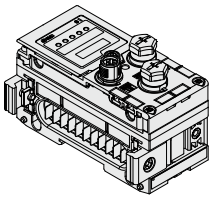

(Wireless compatible)

EX600 − W EN 1

Protocol

Symbol	SI unit type	Description
EN	Wireless master unit	EtherNet/IP™∗1
PN	Wireless master unit	PROFINET∗1
SV	Wireless slave unit	—∗1

∗1 Cannot be communicated with the EX600-HT1-□.
∗ The wireless system is suitable for use only in a country where it is in accordance with the Radio Act and regulations of that country.

Output type

Symbol	Description
1	PNP (Negative common)
2	NPN (Positive common)

Manifold Parts Nos.

⑤ EX600 Digital input unit

EX600−DX P B

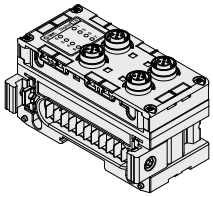

Input type

Symbol	Description
P	PNP
N	NPN

Number of inputs, Open-circuit detection, and Connector

Symbol	Number of inputs	Open-circuit detection	Connector
B	8	No	M12 connector (5 pins) 4 pcs.
C	8	No	M8 connector (3 pins) 8 pcs.
C1	8	Yes	M8 connector (3 pins) 8 pcs.
D	16	No	M12 connector (5 pins) 8 pcs.
E	16	No	D-sub connector (25 pins)*1*2
F	16	No	Spring type terminal block (32 pins)*1*2

⑤ EX600 Digital output unit

EX600−DY P B

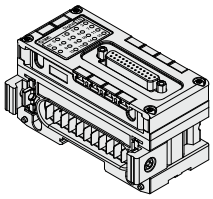

Output type

Symbol	Description
P	PNP
N	NPN

Number of outputs and Connector

Symbol	Number of outputs	Connector
B	8	M12 connector (5 pins) 4 pcs.
E	16	D-sub connector (25 pins)*1*2
F	16	Spring type terminal block (32 pins)*1*2

⑤ EX600 Digital input/output unit

EX600−DM P E

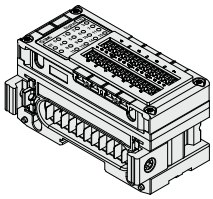

Input/Output type

Symbol	Description
P	PNP
N	NPN

Number of inputs/outputs and Connector

Symbol	Number of inputs	Number of outputs	Connector
E	8	8	D-sub connector (25 pins)*1*2
F	8	8	Spring type terminal block (32 pins)*1*2

⑤ EX600 Analog input/output unit

EX600−AX A

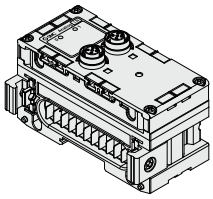

Analog input/output

Symbol	Description
AX	Analog input
AY	Analog output

Number of input channels and Connector

Symbol	Number of input channels	Connector
A	2 channels	M12 connector (5 pins) 2 pcs.*3

*3 Refer to *1 and *2 below for AY.

⑤ EX600 Analog input/output unit

EX600−AM B

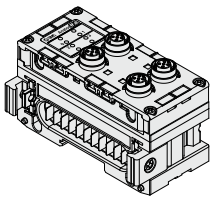

Analog input/output

Number of input/output channels and Connector

Symbol	Number of input channels	Number of output channels	Connector
B	2 channels	2 channels	M12 connector (5 pins) 4 pcs.*1*2

⑥ EX600 End plate

EX600−ED 2 −□

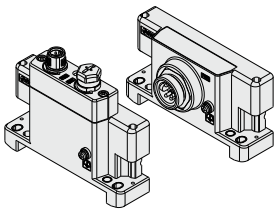

Power connector

Symbol	Connector
2	M12 (5 pins)
3	7/8 inch (5 pins)
4	M12 (4 pins/5 pins)
5	M12 (4 pins/5 pins)

* The pin layout for “4” and “5” pin connector is different.

Mounting

Symbol	Description
Nil	Without DIN rail mounting bracket
3	With DIN rail mounting bracket

⑦ Clamp bracket for EX600

EX600−ZMA3

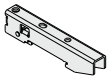

Enclosed parts
Round head screw with washer (M4 x 20) 1 pc.
P-tight screw (4 x 14) 2 pcs.

*1 Cannot be communicated with the EX600-HT1-□ (Old version of the handheld terminal)
*2 Cannot be connected with the EX600-SPR1, EX600-SPR2, EX600-SDN1, or EX600-SDN2

Wiring

EX250

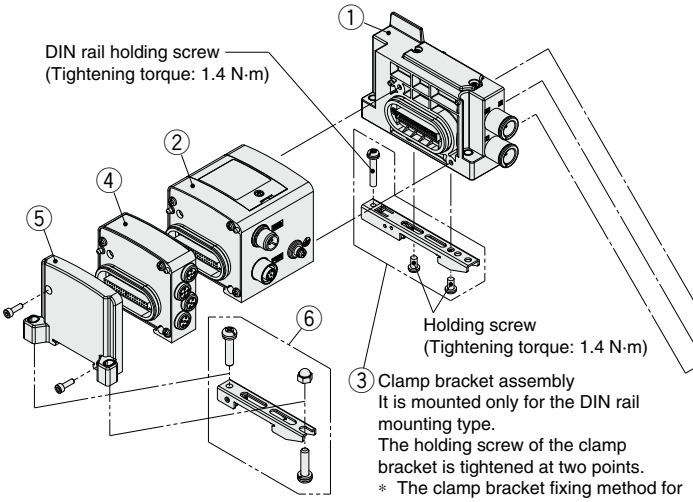

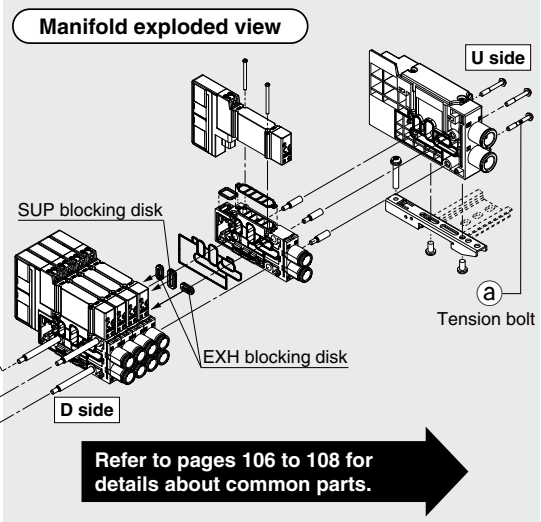

Manifold Parts Nos.

① SUP/EXH block assembly

JSY 3 1M − 1P − 1A □ − C10 □

Series

1	JSY1000
3	JSY3000
5	JSY5000

Pilot, Silencer type

Symbol	Pilot type		Built-in silencer
	Internal	External (Made to Order)	
Nil	●	—	—
S	●	—	●
R	—	●	—

∗ 3/5(E) port is plugged for the built-in silencer type.

Mounting

Symbol	Mounting	JSY1000	JSY3000	JSY5000
Nil	Direct mounting	●	●	●
D00	DIN rail mounting (Without DIN rail)	●	—	—
D0	DIN rail mounting (Without DIN rail)	—	●	●

P, E port size (One-touch fittings)

Symbol	P, E port	JSY1000	JSY3000	JSY5000
C8	ø8 One-touch fitting	●	—	—
C10	ø10 One-touch fitting	—	●	—
C12	ø12 One-touch fitting	—	—	●
00∗1	Plug	●	●	●

∗1 Can be selected when the pilot, silencer type symbol is "Nil" or "S." Not available for "R" type.

SUP/EXH block assembly (D side) accessories and the number of accessories

Accessories	JSY1000 JSY3000	JSY5000
ⓐ Tension bolt	None∗1	3 pcs.

∗1 Since the nuts are embedded in the SUP/EXH block

② EX250 SI unit

EX250 − S DN1

Communication protocol

DN1	DeviceNet™ (Negative common)
PR1	PROFIBUS DP (Negative common)
MJ2	CC-Link (Positive common)
AS3	AS-Interface (8 in/8 out, 31 slave modes, 2 isolated common type) (Negative common)
AS5	AS-Interface (4 in/4 out, 31 slave modes, 2 isolated common type) (Negative common)
AS7	AS-Interface (8 in/8 out, 31 slave modes, 1 common type) (Negative common)
AS9	AS-Interface (4 in/4 out, 31 slave modes, 1 common type) (Negative common)
CA1A	CANopen (Negative common)
EN1	EtherNet/IP™ (Negative common)

③ Clamp bracket

Series	Part no.
JSY1000	JSY11M-15P-2A
JSY3000	SY30M-15-1A
JSY5000	SY50M-15-1A

∗ Part number is for one piece.

④ Input block

EX250 − IE 1

Block type

1	M12 connector, 2 inputs
2	M12 connector, 4 inputs
3	M8 connector, 4 inputs

⑤ EX250 End plate assembly

EX250 − EA1

∗ With mounting screws (2 pcs. of M3 x 10)

⑥ Clamp bracket assembly for EX250

SY30M − 15 − 3A

∗ Part number is for one assembly.

Wiring

EX260

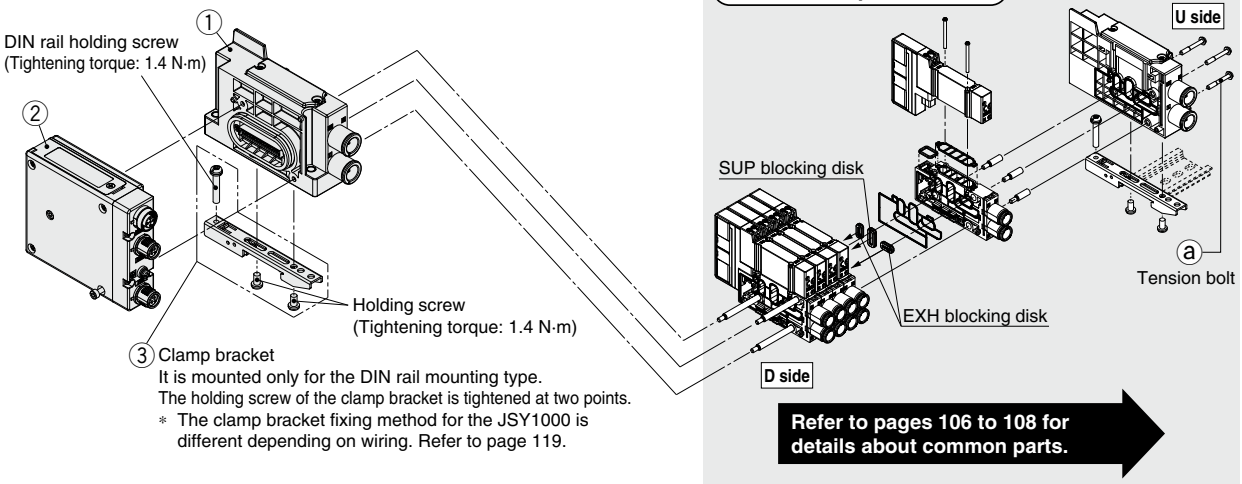

Manifold Parts Nos.

① SUP/EXH block assembly

JSY 3 1M − 1P − 1A □ − C10 □

Series

1	JSY1000
3	JSY3000
5	JSY5000

Pilot, Silencer type

Symbol	Pilot type		Built-in silencer
	Internal	External (Made to Order)	
Nil	●	—	—
S	●	—	●
R	—	●	—

∗ 3/5(E) port is plugged for the built-in silencer type.

Mounting

Nil	Direct mounting
D0	DIN rail mounting (Without DIN rail)

P, E port size (One-touch fittings)

Symbol	P, E port	JSY1000	JSY3000	JSY5000
C8	ø8 One-touch fitting	●	—	—
C10	ø10 One-touch fitting	—	●	—
C12	ø12 One-touch fitting	—	—	●
00∗1	Plug	●	●	●

∗1 Can be selected when the pilot, silencer type symbol is "Nil" or "S." Not available for "R" type.

SUP/EXH block assembly (D side) accessories and the number of accessories

Accessories	JSY1000/3000	JSY5000
ⓐ Tension bolt	None∗1	3 pcs.

∗1 Since the nuts are embedded in the SUP/EXH block

② EX260 SI unit

EX260 − S PR1

Communication protocol

Symbol	Protocol	Number of outputs	SI unit output polarity	Communication connector	Manifold symbol
DN1	DeviceNet™	32	Source/PNP (Negative common)	M12	QAN
DN2			Sink/NPN (Positive common)		QA
DN3		16	Source/PNP (Negative common)		QBN
DN4			Sink/NPN (Positive common)		QB
PR1	PROFIBUS DP	32	Source/PNP (Negative common)	M12	NAN
PR2			Sink/NPN (Positive common)		NA
PR3		16	Source/PNP (Negative common)		NBN
PR4			Sink/NPN (Positive common)		NB
PR5		32	Source/PNP (Negative common)	D-sub∗1	NCN
PR6			Sink/NPN (Positive common)		NC
PR7		16	Source/PNP (Negative common)		NDN
PR8			Sink/NPN (Positive common)		ND
MJ1	CC-Link	32	Source/PNP (Negative common)	M12	VAN
MJ2			Sink/NPN (Positive common)		VA
MJ3		16	Source/PNP (Negative common)		VBN
MJ4			Sink/NPN (Positive common)		VB

Symbol	Protocol	Number of outputs	SI unit output polarity	Communication connector	Manifold symbol
EC1	EtherCAT	32	Source/PNP (Negative common)	M12	DAN
EC2			Sink/NPN (Positive common)		DA
EC3		16	Source/PNP (Negative common)		DBN
EC4			Sink/NPN (Positive common)		DB
PN1	PROFINET	32	Source/PNP (Negative common)	M12	FAN
PN2			Sink/NPN (Positive common)		FA
PN3		16	Source/PNP (Negative common)		FBN
PN4			Sink/NPN (Positive common)		FB
EN1	EtherNet/IP™	32	Source/PNP (Negative common)	M12	EAN
EN2			Sink/NPN (Positive common)		EA
EN3		16	Source/PNP (Negative common)		EBN
EN4			Sink/NPN (Positive common)		EB
PL1	Ethernet POWERLINK	32	Source/PNP (Negative common)	M12	GAN
PL3		16			GBN

∗1 Enclosure is IP40 when the communication connector is D-sub.

③ Clamp bracket

Series	Part no.
JSY1000	JSY11M-15P-1A
JSY3000	SY30M-15-1A
JSY5000	SY50M-15-1A

∗ Part number is for one piece.

Wiring

EX120

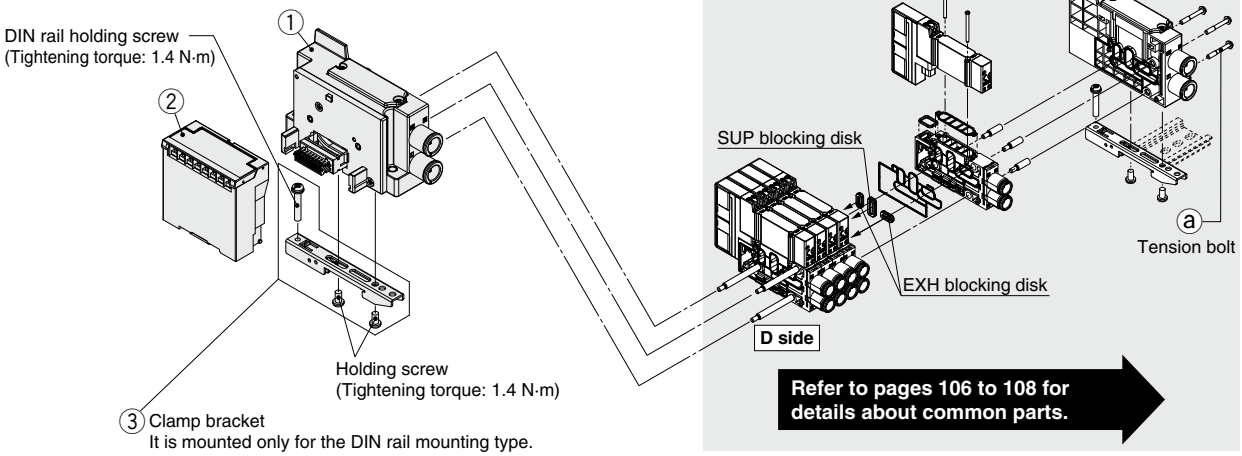

Manifold Parts Nos.

① SUP/EXH block assembly

JSY 3 1M − 1P − 14A □ − C10 □

Series

1	JSY1000
3	JSY3000
5	JSY5000

Mounting

Nil	Direct mounting
D0	DIN rail mounting (Without DIN rail)

Pilot, Silencer type

Symbol	Pilot type		Built-in silencer
	Internal	External (Made to Order)	
Nil	●	—	—
S	●	—	●
R	—	●	—

∗ 3/5(E) port is plugged for the built-in silencer type.

P, E port size (One-touch fittings)

Symbol	P, E port	JSY1000	JSY3000	JSY5000
C8	ø8 One-touch fitting	●	—	—
C10	ø10 One-touch fitting	—	●	—
C12	ø12 One-touch fitting	—	—	●
00∗1	Plug	●	●	●

∗1 Can be selected when the pilot, silencer type symbol is "Nil" or "S." Not available for "R" type.

SUP/EXH block assembly (D side) accessories and the number of accessories

Accessories	JSY1000/3000	JSY5000
ⓐ Tension bolt	None∗1	3 pcs.

∗1 Since the nuts are embedded in the SUP/EXH block

② EX120 SI unit

EX120 − S DN1

Communication protocol

DN1	DeviceNet™ (Positive common)
CS1	OMRON Corp.: CompoBus/S (16 outputs) (Positive common)
CS2	OMRON Corp.: CompoBus/S (8 outputs) (Positive common)
MJ1	CC-Link (Positive common)
CM1	CompoNet™ NPN (Positive common)
CM3	CompoNet™ PNP (Negative common)

③ Clamp bracket

Series	Part no.
JSY1000	JSY11M-15P-1A
JSY3000	SY30M-15-1A
JSY5000	SY50M-15-1A

∗ Part number is for one piece.

Manifold Exploded View [Common Parts]

⚠ Caution

Tightening torque for valve mounting screw

M1.4: 0.06 N·m (JSY1000)
M2: 0.16 N·m (JSY3000)
M3: 0.8 N··m (JSY5000)

∗ Refer to page 107 for order numbers.

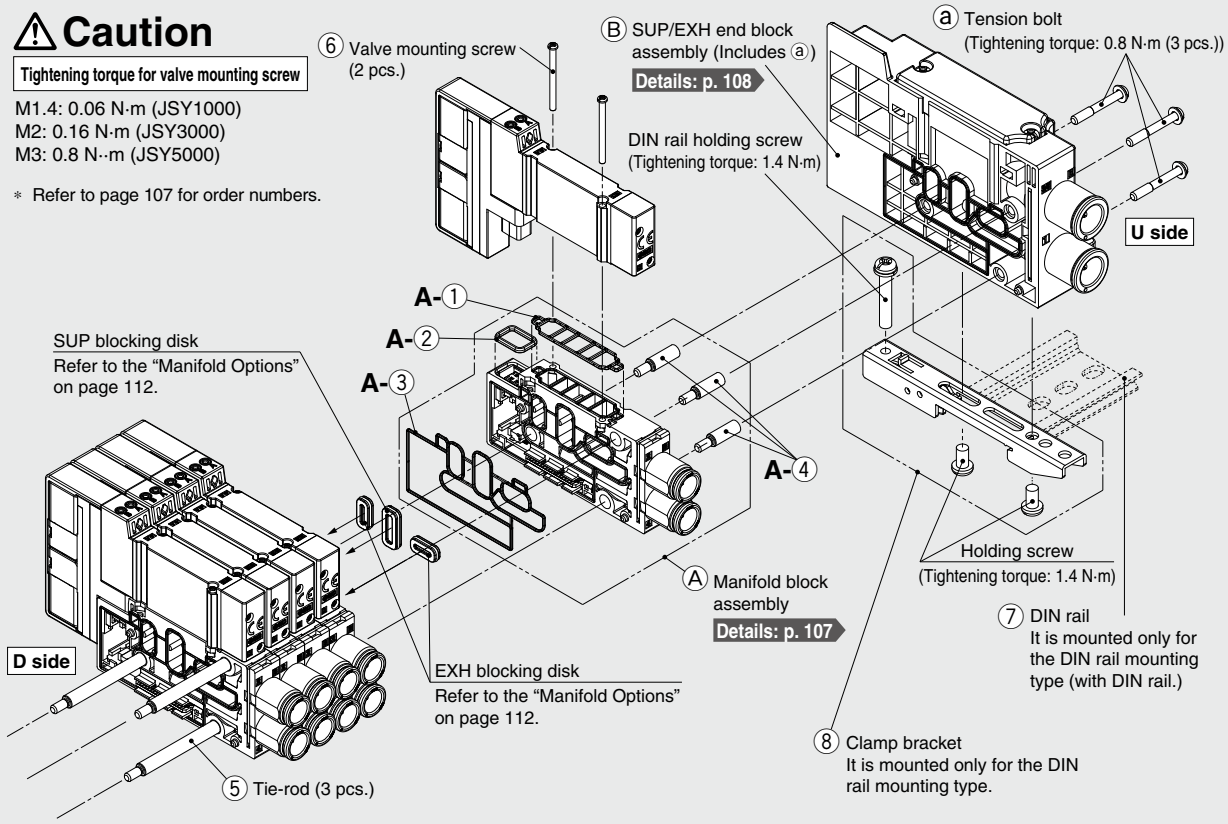

∗ The figures show the JSY3000 series.

Type 10: How to Increase Connector Type Manifolds

1 **Loosen the U-side tension bolt ⓐ, and remove the Ⓑ SUP/EXH end block assembly.**

↓

2 **Screw in ④ tie-rods for additional stations to the ⑤ tie-rod of the manifold.**

(Screw them in until there is no gap between the tie-rods.)

↓

3 **Connect the Ⓐ manifold block assembly and Ⓑ SUP/EXH end block assembly to be added, and tighten the tension bolt ⓐ.**

Tightening torque for tension bolt ⓐ (M3): 0.8 N·m

⚠ Caution

1. Be sure to shut off the power and air supplies before disassembly.
   Furthermore, since air may remain inside the actuator, piping and manifold, confirm that the air is completely exhausted before performing any work.
2. When disassembly and assembly are performed, air leakage may result if the tightening of the tension bolt is inadequate.

<For JSY3000>

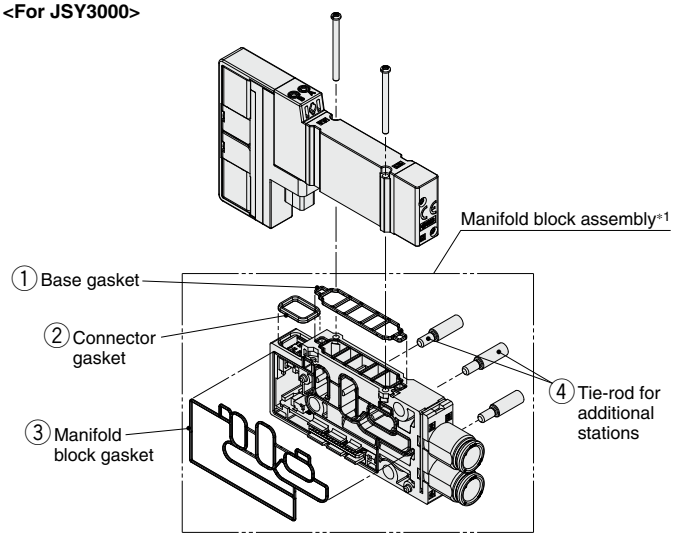

Gaskets are mounted.

∗1 **Manifold block assembly**

No.	Description	Quantity	Note
①②③	**Gasket**	1 pc. of each	For base, connector and manifold block
④	**Tie-rod for additional stations**	3	

Refer to page 107 for ordering single unit.
∗ ② Connector gasket is not applicable to the JSY1000.

For JJ5SY1-10, JJ5SY3-10, JJ5SY5-10

No.	Description		JSY1000 6.5 mm pitch	JSY1000 9 mm pitch	JSY3000	JSY5000	Note
A-①	Manifold block assembly	Base gasket (for connector connecting base)	JSY11M-9P-1A		JSY31M-9P-1A	JSY51M-9P-1A	Part numbers shown on the left are for 10 valves. (10 pcs.)
A-②	Manifold block assembly	Connector gasket	—		SX3000-146-2		Supplied individually
A-③	Manifold block assembly	Manifold block gasket	JSY11M-9P-2		JSY31M-9P-2	JSY51M-9P-2	Supplied individually
A-④	Manifold block assembly	Tie-rod for additional stations*1	JSY11M-49P-1-1-A (6.5 mm pitch)	JSY11M-49P-2-1-A (9 mm pitch)	JSY31M-49P-1-1-A (11.5 mm pitch)	SV2000-55-2A-A (16 mm pitch)	3 pcs. supplied
⑤	Tie-rod		JSY11M-49P-1-□-A (6.5 mm pitch)	JSY11M-49P-2-□-A (9 mm pitch)	JSY31M-49P-1-□-A (11.5 mm pitch)	SV2000-55-1-□-A (16 mm pitch)	□: Manifold stations (2 to 24 stations) 3 pcs. supplied
⑥	Valve mounting screw		JSY11V-23-1A (M1.4 x 21.5)		JSY31V-23-1A (M2 x 25)	JSY51V-23-1A (M3 x 29)	Part numbers shown on the left are for 10 valves. (20 pcs.)
⑦	DIN rail		VZ1000-11-1-□			VZ1000-11-4-□	Refer to page 110.
⑧	Clamp bracket*2 (for connector connecting base)		JSY11M-15P-1A (Refer to the table below.)*2 JSY11M-15P-2A (Refer to the table below.)		SY30M-15-1A	SY50M-15-1A	Supplied individually

*1 The manifold of the JSY1000/3000 (JJ5SY1-10/JJ5SY3-10) can be assembled by connecting the tie-rods for number of manifold stations. The manifold of the JSY5000 (JJ5SY5-10) cannot be assembled by connecting the tie-rods for additional stations for the number of manifold. Tie-rod (SV2000-55-1-□-A) is necessary.

*2 Part number of the clamp bracket for the JSY1000 is different depending on the manifold wiring. Refer to the table below. Refer to page 119 for assembly.

Table. JSY1000 series clamp bracket

Wiring (JSY1000 series)		JSY11M-15P-1A	JSY11M-15P-2A
F	D-sub connector	●	—
P□	Flat ribbon cable	●	—
TC	Spring type terminal block box	●	—
T	Terminal block box	—	●
L	Lead wire	●	—
S6	EX600	—	●
S□	EX250	—	●
S□□	EX260	●	—
S3	EX120	●	—

Manifold Parts Nos.

Ⓐ Manifold block assembly

JSY 3 1M – 2P – 1 D A – C8

Series

1	JSY1000
3	JSY3000
5	JSY5000

Manifold pitch

1	JSY1000 (6.5 mm pitch) JSY3000 (11.5 mm pitch) JSY5000 (16 mm pitch)
2	JSY1000 (9 mm pitch)

Wiring type

S	Single wiring
D	Double wiring

A, B port size (One-touch fittings)

Symbol	A, B port	JSY1000 6.5 mm pitch	JSY1000 9 mm pitch	JSY3000	JSY5000
C2	ø2 One-touch fitting	●	—	—	—
C4	ø4 One-touch fitting	●	—	—	—
C6	ø6 One-touch fitting	—	●	●	—
C8	ø8 One-touch fitting	—		●	—
C10	ø10 One-touch fitting	—		—	●
C12	ø12 One-touch fitting	—		—	●

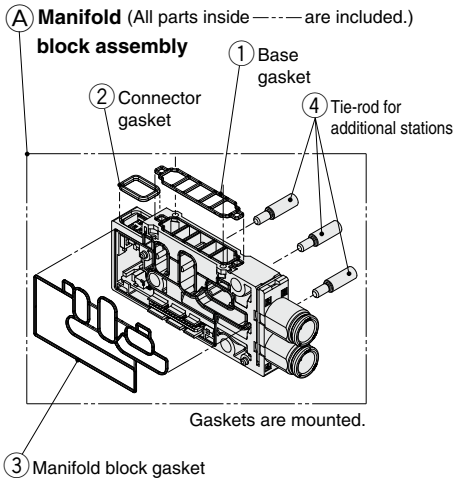

Manifold block assembly accessories and the number of accessories

Accessories	Quantity
① **Base gasket**	1 pc.
② **Connector gasket***1	1 pc.
③ **Manifold block gasket**	1 pc.
④ **Tie-rod for additional stations**	3 pcs.

*1 Not applicable to the JSY1000 series.

Manifold Parts Nos.

Ⓑ SUP/EXH end block assembly

JSY 3 1M − 3P − 1A □ − C10 □

Series

1	JSY1000
3	JSY3000
5	JSY5000

Pilot, Silencer type

Symbol	Pilot type		Built-in silencer
	Internal	External (Made to Order)	
Nil	●	—	—
S	●	—	●
R	—	●	—

∗ 3/5(E) port is plugged for the built-in silencer type.

P, E port size (One-touch fittings)

Symbol	P, E port	JSY1000	JSY3000	JSY5000
C8	ø8 One-touch fitting	●	—	—
C10	ø10 One-touch fitting	—	●	—
C12	ø12 One-touch fitting	—	—	●
00∗1	Plug	●	●	●

∗1 Can be selected when the pilot, silencer type symbol is "Nil" or "S." Not available for "R" type.

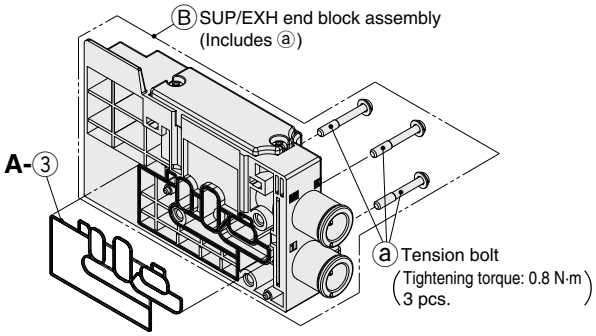

Mounting

Nil	Direct mounting
D0	DIN rail mounting (Without DIN rail)
D00∗1	DIN rail mounting (Without DIN rail)

∗1 Part number only for the JSY1000
Part number is different depending on the wiring. Refer to Table 1.

Table 1. JSY1000 series DIN rail mounting

Symbol	Wiring
D0	D-sub connector (**F** type) Flat ribbon cable (**P**□ type) Spring type terminal block box (**TC** type) Lead wire (**L** type) EX260 (**S**□□ type) EX120 (**S3** type)
D00	Terminal block box (**T** type) EX600 (**S6** type) EX250 (**S**□ type)

SUP/EXH end block assembly accessories and the number of accessories

Accessories	Quantity
ⓐ **Tension bolt**	3 pcs.
A-③ Manifold block gasket	1 pc.

∗ Gasket is mounted.

⑧ Clamp bracket

Series		Part no.
JSY1000	For D0	JSY11M-15P-1A
	For D00	JSY11M-15P-2A
JSY3000		SY30M-15-1A
JSY5000		SY50M-15-1A

∗ Part number is for one piece.
∗ Part number of the JSY1000 is different depending on the manifold wiring.
Refer to the Table 1. JSY1000 series DIN rail mounting for selecting a clamp bracket.

■ Cover, Silencer cover, Port block for SUP/EXH (end) block assembly

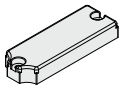

Cover
(Internal pilot)

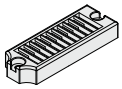

Silencer cover
(Internal pilot, Built-in silencer)

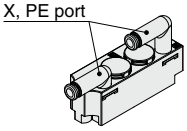

Port block
(External pilot: Made to Order)

∗ Cover, silencer cover, and port block are included in the SUP/EXH (end) block assembly, but they need to be ordered for piping specification change.
∗ Mounting screws (2 pcs.) for SUP/EXH end block assembly are included.

Tightening torque for mounting screw
JSY1000 (M2.5): 0.32 N·m
JSY3000 (M3): 0.8 N·m
JSY5000 (M4): 1.4 N·m

JSY 3 1M − 4P − 1A

JSY 3 1M − 5P − 1A

JSY 3 1M − 6P − 1AR − 00

Series

1	JSY1000
3	JSY3000
5	JSY5000

⚠ Caution

1. Be sure to shut off the power and air supplies before disassembly. Furthermore, since air may remain inside the actuator, piping and manifold, confirm that the air is completely exhausted before performing any work.
2. When disassembly and assembly are performed, air leakage may result if the tightening of the cover and port block assemblies are inadequate.

JSY1000/3000/5000 Series
One-touch Fittings, Plug, Clip, Port Plate, Tube Releasing Tool

Refer to “How to Replace One-touch Fittings” on page 118 for the replacement method.

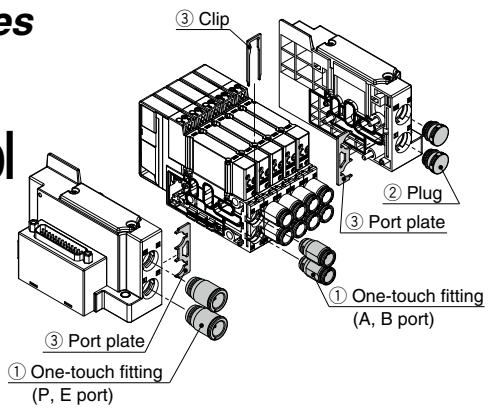

① One-touch Fittings

Series / Port size		JSY1000		JSY3000	JSY5000	Note
		6.5 mm pitch	9 mm pitch			
A, B port	ø2	KQSY10-C2	—	—	—	Part number is for one piece.
	ø4	KQSY10-C4-X1336	—	—	—	
	ø6	—	KQSY11-C6-X1336	KQSY30-C6	—	
	ø8	—		KQSY30-C8-X1336	—	
	ø10	—		—	KQSY50-C10	
	ø12	—		—	KQSY50-C12-X1336	
P, E port	ø8	KQSY30-C8-X1336		—	—	
	ø10	—		KQSY31-C10-X1336	—	
	ø12	—		—	KQSY50-C12-X1336	

∗ Refer to page 118 for assembling when a fitting is replaced.

② Plug

Series / Piping port	JSY1000	JSY3000	JSY5000	Note
P, E port	JSY11M-62P-1A	JSY31M-62P-1A	JSY51M-62P-1A	Part number is for one piece.

∗ A, B port plug does not exist. Use the KQ2P series.

③ Clip, Port Plate

Series / Piping port	JSY1000		JSY3000	JSY5000	Note
	For A, B port C2/C4 fittings	For A, B port C6 fittings			
A, B port (Clip)	SJ1000-CL-1	JSY11M-19P-1A	JSY31M-19P-1A	JSY51M-19P-1A	Part number is for 10 pieces.
P, E port (Port plate)	JSY11M-10P-1		JSY31M-10P-1	JSY51M-10P-1	Part number is for one piece.

∗ Refer to page 118 for assembling when a fitting is replaced.

■ Tube Releasing Tool (This tool is used for removing the tube from port A and B.)

Series	For JSY1000		For JSY3000	For JSY5000
	6.5 mm pitch	9 mm pitch		
Part no.	TG-0204	TG-0608	TG-0608	TG-1012
Applicable tubing O.D.	ø2/ø4	ø6	ø6/ø8	ø10/ø12

For JSY1000 For JSY1000/3000 For JSY5000

Tube removal procedure

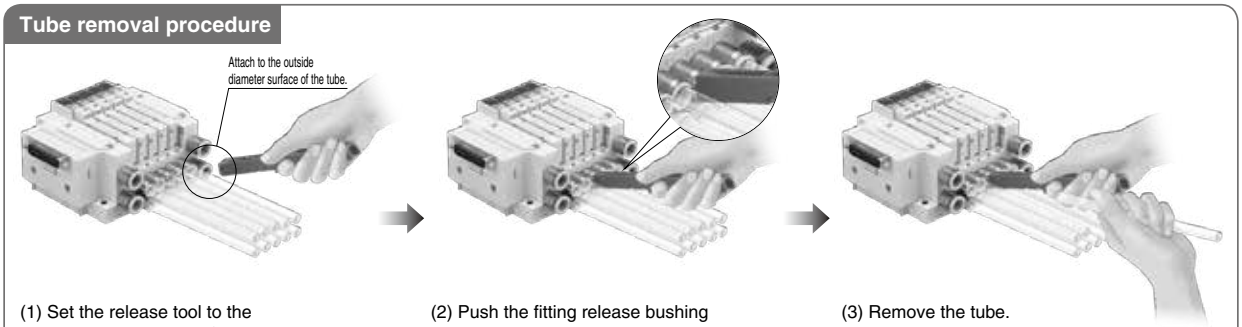

(1) Set the release tool to the outside diameter surface.

(2) Push the fitting release bushing using the release tool.

(3) Remove the tube.

Manifold Options

■DIN rail dimensions/weight for the JSY1000/3000 Plug-in connector connecting base

VZ1000-11-1-□

∗ After confirming the L3 dimension in the dimensions table of each series, refer to the DIN rail dimensions table below and specify the number in the box □.

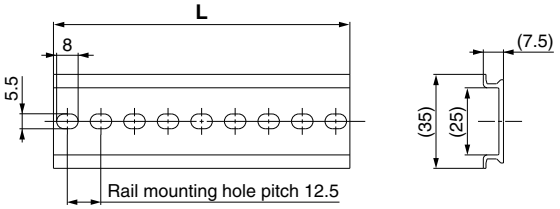

No.	0	1	2	3	4	5	6	7	8	9	10	11	12	13	14	15	16	17	18
L dimension	98	110.5	123	135.5	148	160.5	173	185.5	198	210.5	223	235.5	248	260.5	273	285.5	298	310.5	323
Weight [g]	17.6	19.9	22.1	24.4	26.6	28.9	31.1	33.4	35.6	37.9	40.1	42.4	44.6	46.9	49.1	51.4	53.6	55.9	58.1

No.	19	20	21	22	23	24	25	26	27	28	29	30	31	32	33	34	35	36	37
L dimension	335.5	348	360.5	373	385.5	398	410.5	423	435.5	448	460.5	473	485.5	498	510.5	523	535.5	548	560.5
Weight [g]	60.4	62.5	64.9	67.1	69.4	71.6	73.9	76.1	78.4	80.6	82.9	85.1	87.4	89.6	91.9	94.1	96.4	98.6	100.9

No.	38	39	40	41	42	43	44	45	46	47	48	49	50	51	52	53	54	55	56
L dimension	573	585.5	598	610.5	623	635.5	648	660.5	673	685.5	698	710.5	723	735.5	748	760.5	773	785.5	798
Weight [g]	103.1	105.4	107.6	109.9	112.1	114.4	116.6	118.9	121.1	123.4	125.6	127.9	130.1	132.4	134.6	136.9	139.1	141.4	143.6

No.	57	58	59	60	61	62	63	64	65	66	67	68	69	70	71
L dimension	810.5	823	835.5	848	860.5	873	885.5	898	910.5	923	935.5	948	960.5	973	985.5
Weight [g]	145.9	148.1	150.4	152.6	154.9	157.1	159.4	161.6	163.9	166.1	168.4	170.6	172.9	175.1	177.4

■DIN rail dimensions/weight for the JSY5000 Plug-in connector connecting base

VZ1000-11-4-□

∗ After confirming the L3 dimension in the dimensions table of each series, refer to the DIN rail dimensions table below and specify the number in the box □.

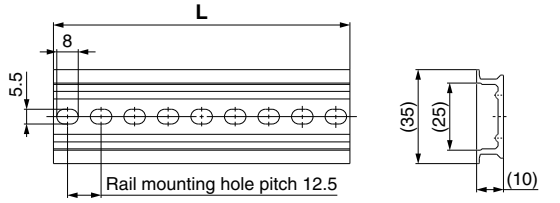

No.	0	1	2	3	4	5	6	7	8	9	10	11	12	13	14	15	16	17	18
L dimension	98	110.5	123	135.5	148	160.5	173	185.5	198	210.5	223	235.5	248	260.5	273	285.5	298	310.5	323
Weight [g]	24.8	28	31.1	34.3	37.4	40.6	43.8	46.9	50.1	53.3	56.4	59.6	62.7	65.9	69.1	72.2	75.4	78.6	81.7

No.	19	20	21	22	23	24	25	26	27	28	29	30	31	32	33	34	35	36	37
L dimension	335.5	348	360.5	373	385.5	398	410.5	423	435.5	448	460.5	473	485.5	498	510.5	523	535.5	548	560.5
Weight [g]	84.9	88	91.2	94.4	97.5	100.7	103.9	107	110.2	113.3	116.5	119.7	122.8	126	129.2	132.3	135.5	138.6	141.8

No.	38	39	40	41	42	43	44	45	46	47	48	49	50	51	52	53	54	55	56
L dimension	573	585.5	598	610.5	623	635.5	648	660.5	673	685.5	698	710.5	723	735.5	748	760.5	773	785.5	798
Weight [g]	145	148.1	151.3	154.5	157.6	160.8	163.9	167.1	170.3	173.4	176.6	179.8	182.9	186.1	189.2	192.4	195.6	198.7	201.9

No.	57	58	59	60	61	62	63	64	65	66	67	68	69	70	71
L dimension	810.5	823	835.5	848	860.5	873	885.5	898	910.5	923	935.5	948	960.5	973	985.5
Weight [g]	205.1	208.2	211.4	214.5	217.7	220.9	224	227.2	230.4	233.5	236.7	239.8	243	246.2	249.3

⚠Caution

Tightening torque for mounting screw
M1.4: 0.06 N·m (JSY1000)
M2: 0.16 N·m (JSY3000)
M3: 0.8 N·m (JSY5000)

Manifold Options

∗ Refer to page 113 for dimensions.

■ Blanking plate

[With two mounting screws]

Used when valve additions are expected or for maintenance.

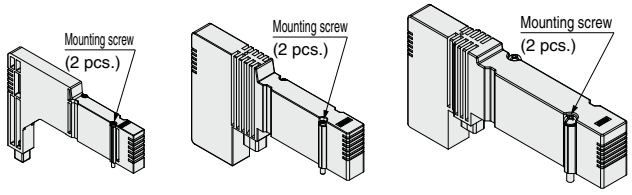

JSY11M-26P-1A JSY31M-26P-1A JSY51M-26P-1A

JSY 3 1M – 26P – 1A

Series

1	JSY1000
3	JSY3000
5	JSY5000

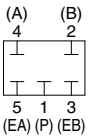

Circuit diagram

■ Individual SUP spacer

[With a connector gasket, a base gasket, and two mounting screws]

When the same manifold is used for different pressures, an individual SUP spacer assembly is used as a supply port for different pressures.

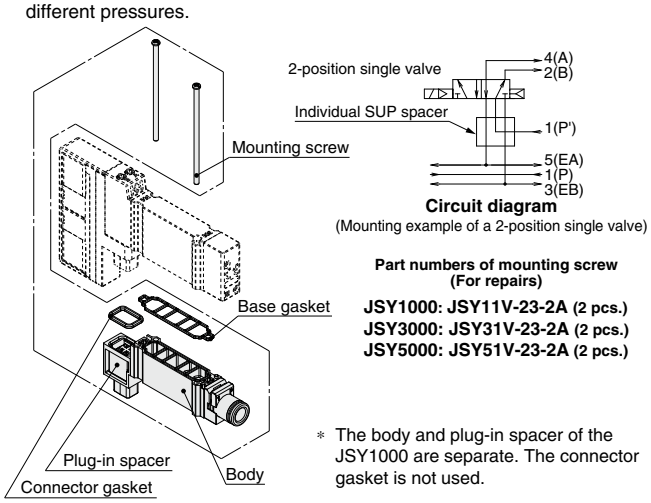

Circuit diagram

(Mounting example of a 2-position single valve)

Part numbers of mounting screw (For repairs)

JSY1000: JSY11V-23-2A (2 pcs.)
JSY3000: JSY31V-23-2A (2 pcs.)
JSY5000: JSY51V-23-2A (2 pcs.)

∗ The body and plug-in spacer of the JSY1000 are separate. The connector gasket is not used.

JSY 3 1M – 38 P – 1A – C6

Spacer type

38	Individual SUP spacer
39	Individual EXH spacer

Series

1	JSY1000
3	JSY3000
5	JSY5000

Port size (One-touch fittings)

Symbol	P, E port	JSY1000	JSY3000	JSY5000
C4	ø4 One-touch fitting	●	—	—
C6	ø6 One-touch fitting	—	●	—
C8	ø8 One-touch fitting	—	—	●
C10	ø10 One-touch fitting	—	—	●
C12	ø12 One-touch fitting	—	—	●

■ Individual EXH spacer

[With a connector gasket, a base gasket, and two mounting screws]

When valve exhaust affects other stations due to the circuit configuration, this spacer assembly is used for individual valve exhaust.

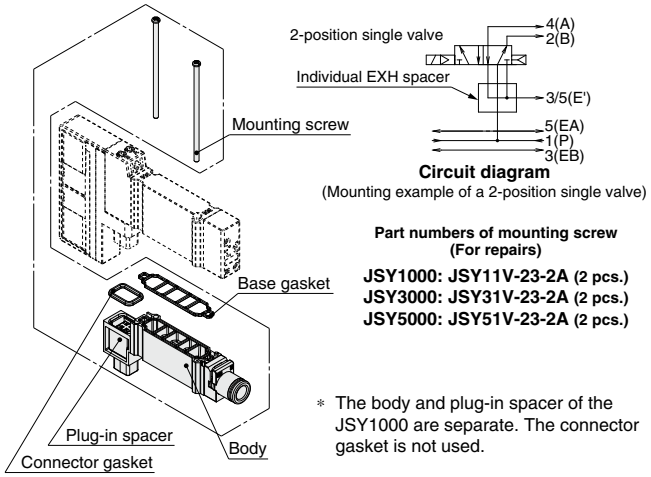

Circuit diagram

(Mounting example of a 2-position single valve)

Part numbers of mounting screw (For repairs)

JSY1000: JSY11V-23-2A (2 pcs.)
JSY3000: JSY31V-23-2A (2 pcs.)
JSY5000: JSY51V-23-2A (2 pcs.)

∗ The body and plug-in spacer of the JSY1000 are separate. The connector gasket is not used.

Manifold Options

■SUP/EXH blocking disk

[SUP blocking disk]
By inserting the SUP blocking disk in the pressure supply passage of the manifold valve, can provide two different high and low pressure in one manifold.

[EXH blocking disk]
By inserting the EXH blocking disk in the exhaust passage of the manifold valve, can separate the exhaust from the valve so it does not affect the other valves. It can also be used for the manifold for the positive pressure and vacuum mixed manifold. (2 pieces are required to block EA/EB both sides of the EXH.)

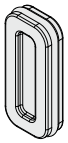

Series	SUP blocking disk	EXH blocking disk
JSY1000	JSY11M-40P-1A	JSY11M-40P-1A
JSY3000	JSY31M-40P-1A	JSY31M-40P-2A
JSY5000	JSY51M-40P-1A	JSY51M-40P-1A

■Label for blocking disk

Label to indicate and confirm on the manifold where the SUP/EXH blocking disk assemblies were inserted. (3 labels of each)

SUP/EXH blocking disk label

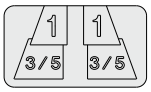

SUP blocking disk label

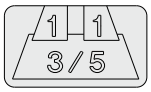

EXH blocking disk label

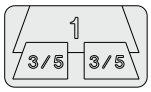

Series	Part no.
JSY1000	SJ3000-155-1A
JSY3000	
JSY5000	

∗ If the blocking disk is ordered using the manifold specification sheet and ordered at the same time as the manifold, the position where the blocking disk is inserted will be labeled and shipped out.

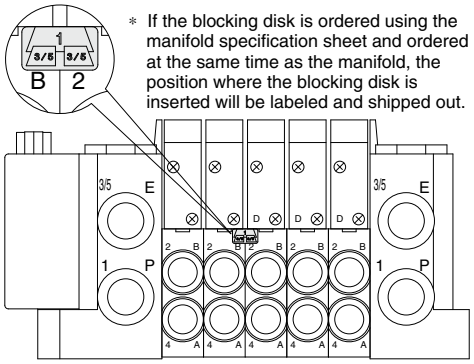

■Silencer (One-touch fitting connection type)

This silencer can be mounted to the 3/5 (E: EXH) port of the manifold in one step.

∗ Shipped together with the product

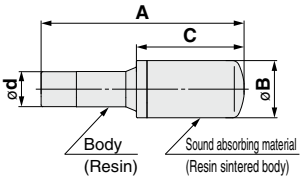

Series (ø**d**)	Model	Effective area	**A**	**B**	**C**
For JSY1000 (ø8)	**AN15-C08**	20 mm²	45	13	20
For JSY3000 (ø10)	**AN20-C10**	30 mm²	57.5	16.5	30.5
For JSY5000 (ø12)	**AN30-C12**	41 mm²	71.5	20	43.5

Dimensions: Manifold Options

■ Blanking plate

JSY1000 series

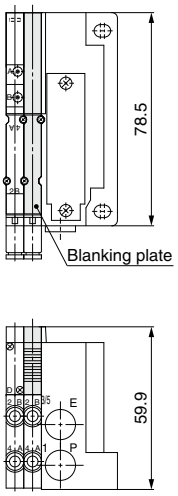

JSY3000 series

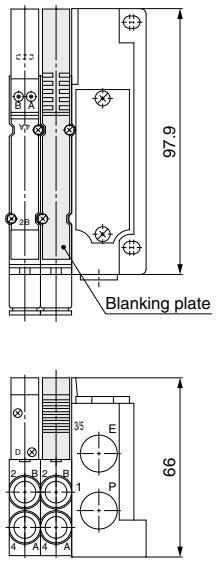

JSY5000 series

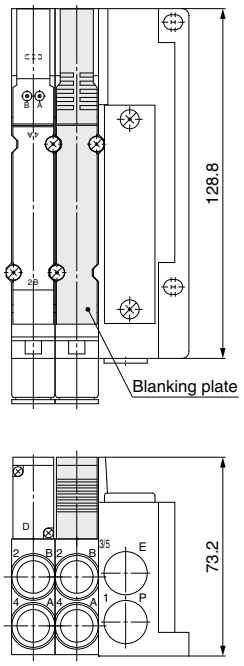

■ Individual SUP/EXH spacer

JSY1000 series

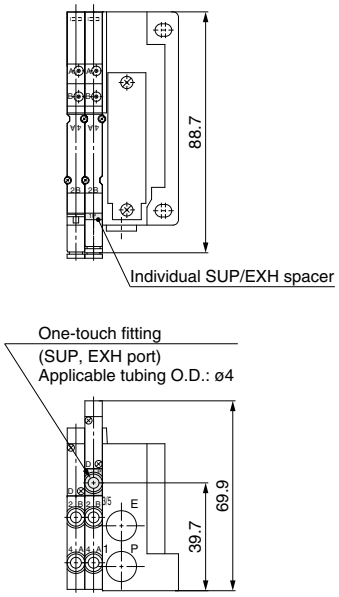

JSY3000 series

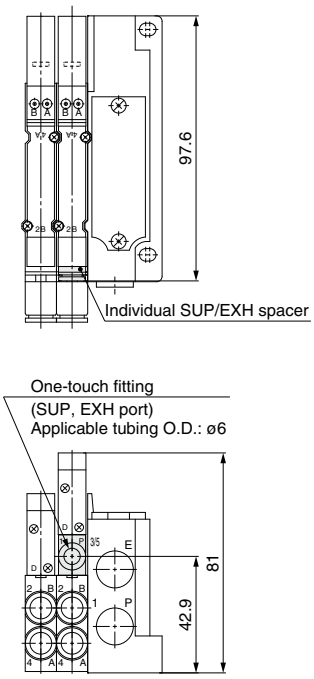

JSY5000 series

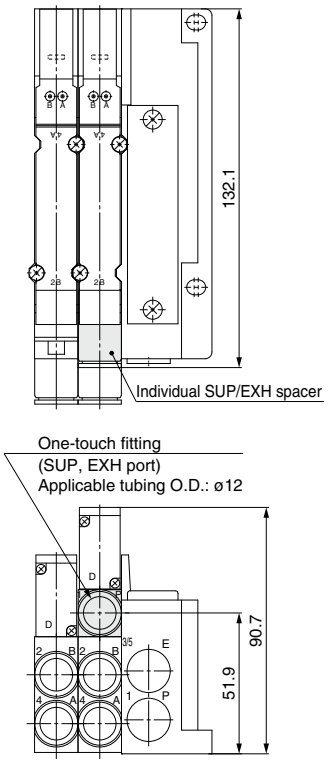

Made to Order

Please contact SMC for detailed dimensions, specifications and delivery times.

1 External Pilot

How to Order Manifolds

Refer to the How to Order manifolds for each type.

For D-sub Connector/Flat Ribbon Cable/Lead Wire pp. 19, 53

JJ5SY 1/3/5 – 10 □□ – □□ R – □□

For Terminal Block Box p. 41

JJ5SY 1/3/5 – 10 T/TC – □□ R – □□

For EX260/EX120 pp. 77, 83

JJ5SY 1/3/5 – 10 S/S3 □ – □□ R – □□

SUP/EXH block assembly

R	External pilot

∗ The combination of external pilot type "R" and silencer type "S" is not available.

For EX600/EX250 pp. 61, 71

JJ5SY 1/3/5 – 10 S6/S □□□ – □ G – □□

P, E port entry, SUP/EXH block assembly

P, E port entry	External pilot
U side (2 to 10 stations)	**G**
D side (2 to 10 stations)	**H**
Both sides (2 to 24 stations)	**J**

How to Order Valves

JSY 1 □ 0 0 R T – 5 □□

JSY 3/5 □ 0 0 R □ – 5 □□

Coil type (See below.)

Pilot type

R	External pilot

∗ External pilot specification is not applicable for 4-position dual 3-port valves.
∗ When pilot type "R" is selected, select the external pilot type "R" for the manifold SUP/EXH block assembly, and select either of "G/H/J" for the EX600/EX250 manifold.

2 Coil Type: With Power Saving Circuit (Continuous Duty Type)

Be sure to select the power saving circuit type when the JSY3000/5000 series is continuously energized for long periods of time.
Be careful of the energizing time when the power saving circuit is selected. Refer to page 116 for details.
0.1 W: JSY3000/5000

How to Order Valves

JSY 3/5 □ 0 0 □ T – 5 □□

Coil type

T	With power saving circuit (Continuous duty type)

Pilot type (See above.)

JSY1000/3000/5000 Series
Specific Product Precautions 1

Be sure to read this before handling the products. Refer to the back cover for safety instructions. For 3/4/5-port solenoid valve precautions, refer to the "Handling Precautions for SMC Products" and the "Operation Manual" on the SMC website: https://www.smcworld.com

Environment

⚠ Warning

1. Do not use valves in atmospheres of corrosive gases, chemicals, sea water, water, water vapor, or where there is direct contact with any of these.
2. Products compliant with IP67 enclosures (based on IEC60529) are protected against dust and water, however, these products cannot be used in water. If using in an environment that is exposed to water and dust splashes, take measures such as using a protective cover.
3. When using built-in silencer type manifold with an IP67 enclosure, keep the exhaust port of the silencer from coming in direct contact with water or other liquids.

Valve Mounting

⚠ Caution

Mount it so that there is no slippage or deformation in gaskets, and tighten with the tightening torque as shown on the right.

Series	Thread size	Tightening torque
JSY1000	M1.4	0.06 N·m
JSY3000	M2	0.16 N·m
JSY5000	M3	0.8 N·m

Manual Override

⚠ Warning

Regardless of an electric signal for the valve, the manual override is used for switching the main valve. Connected actuator is started by manual operation. Use the manual override after confirming that there is no danger.

■ Non-locking push type

Push down on the manual override button until it stops.

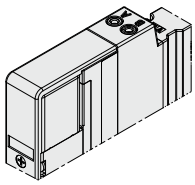

■ Push-turn locking slotted type [D type]

Push down on the manual override with a small flat head screwdriver until it stops, and then turn it 90° clockwise. The manual override is then locked. To release it, turn it counterclockwise.
If it is not turned, it can be operated the same way as the non-locking push type.

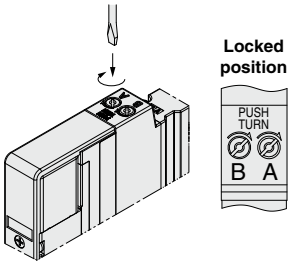

Manual Override

⚠ Warning

■ Push-turn locking lever type [E type] (Only for the JSY3000/5000)

Push down on the manual override by finger until it stops, and then turn it 60° clockwise. The manual override is then locked. To release it, turn it counterclockwise. If it is not turned, it can be operated the same way as the non-locking push type.

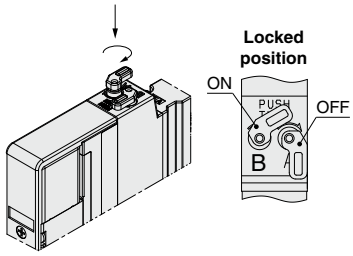

Carefully check the manual override projection amount.
Max. (at OFF): 3.7 mm

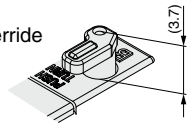

⚠ Caution

Do not apply excessive torque when turning the manual override. [0.1 N·m]
When locking the manual override, be sure to push it down before turning. Turning without first pushing it down can cause damage to the manual override and other trouble such as air leakage, etc.

Used as a 3-Port Valve

⚠ Caution

■ In case of using a 5-port valve as a 3-port valve

The JSY1000/3000/5000 series can be used as normally closed (N.C.) or normally open (N.O.) 3-port port valves by closing one of the cylinder ports 4(A) or 2(B) with a plug. However, they should be used with the exhaust ports kept open. Use them when a double solenoid type 3-port valve is required.

Plug position		B port	A port
Type of actuation		N.C.	N.O.
Number of solenoids	Single	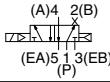	
	Double	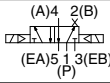	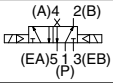

JSY1000/3000/5000 Series
Specific Product Precautions 2

Be sure to read this before handling the products. Refer to the back cover for safety instructions. For 3/4/5-port solenoid valve precautions, refer to the "Handling Precautions for SMC Products" and the "Operation Manual" on the SMC website: https://www.smcworld.com

Light/Surge Voltage Suppressor

⚠Caution

■ Polar type

Positive common

Single solenoid

Light/surge voltage suppressor (□Z)

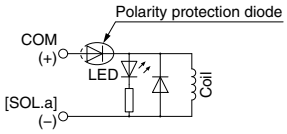

Negative common

Single solenoid

Light/surge voltage suppressor (□NZ)

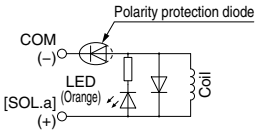

Positive common

Double solenoid, 3-position, 4-position

Light/surge voltage suppressor (□Z)

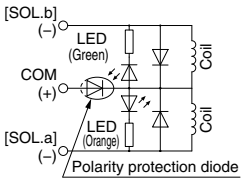

Negative common

Double solenoid, 3-position, 4-position

Light/surge voltage suppressor (□NZ)

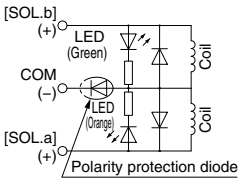

■ Non-polar type

With light/surge voltage suppressor (□U)

Single solenoid

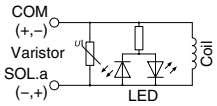

Double solenoid

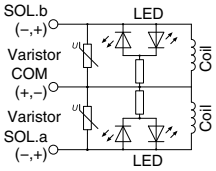

∗ Non-polar type is not available for the JSY1000.

■ With power saving circuit

Power consumption is decreased by approx. 1/3 by reducing the wattage required to hold the valve in an energized state. (Effective energizing time is over 67 ms at 24 VDC.)

<Standard>

Electric circuit diagram
(With power saving circuit)
In the case of single solenoid

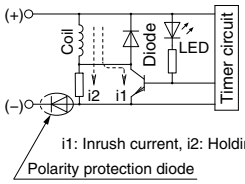

The circuit shown to the left reduces the power consumption for holding in order to save energy. Refer to the electrical power waveform as shown below.

<Electrical power waveform with power saving circuit>

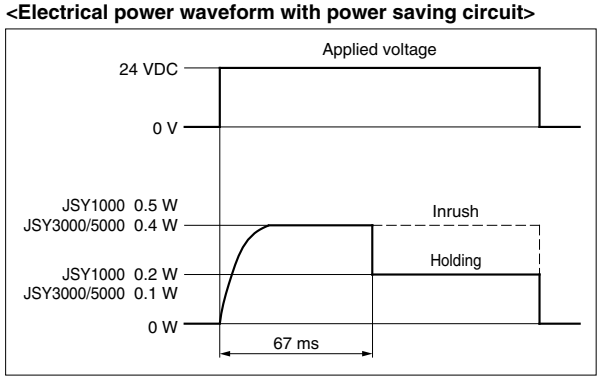

· Since the voltage will drop by approx. 0.5 V due to the transistor, pay attention to the allowable voltage fluctuation. (For details, refer to the solenoid specifications of each type of valve.)

Residual voltage of the surge voltage suppressor

∗ If a varistor or diode surge voltage suppressor is used, there is some residual voltage to the protection element and rated voltage. Therefore, refer to the below table and pay attention to the surge voltage protection on the controller side. Also, since the response time does change, refer to the valve specifications on page 12.

Residual Voltage

Surge voltage suppressor	24 VDC
Z	Approx. 1 V
U	Approx. 47 V

Continuous Duty

⚠Caution

If a valve is energized continuously for long periods of time, the rise in temperature due to heat-up of the coil assembly may cause a decline in solenoid valve performance, reduce service life, or have adverse effects on peripheral equipment. If the valve is energized continuously for long periods of time, be sure to use a valve with power saving circuit. In particular, if three or more adjacent stations on the manifold are energized simultaneously for extended periods of time or if the valves on A side and B side are energized simultaneously for long periods of time, take special care as the temperature rise will be greater.

Energization of a 2-Position Double Solenoid Valve

⚠Caution

To avoid operation failure, do not energize the A side and B side of 2-position double solenoid valve at the same time.

JSY1000/3000/5000 Series
Specific Product Precautions 3

Be sure to read this before handling the products. Refer to the back cover for safety instructions. For 3/4/5-port solenoid valve precautions, refer to the "Handling Precautions for SMC Products" and the "Operation Manual" on the SMC website: https://www.smcworld.com

Countermeasure for Surge Voltage Intrusion

⚠Caution

■ Sneak-in of surge voltage

With non-polar type valves, at times of sudden interruption of the loading power supply, such as emergency shutdown, surge voltage intrusion may be generated from loading equipment with a large capacity (power consumption), and the valve in a de-energized state may switch over (see Figure 1). When installing a breaker circuit for the loading power supply, consider using a valve with polarity (with polarity protection diode), or install a surge absorption diode between the loading equipment COM line and the output equipment COM line (see Figure 2).

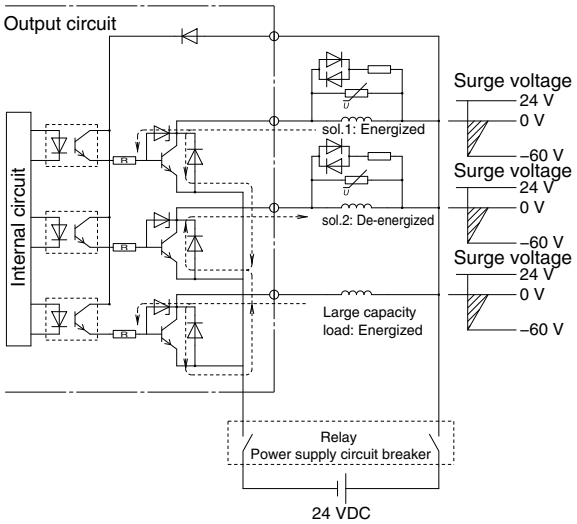

Figure 1. Surge intrusion circuit example (NPN outlet example) (24 VDC)

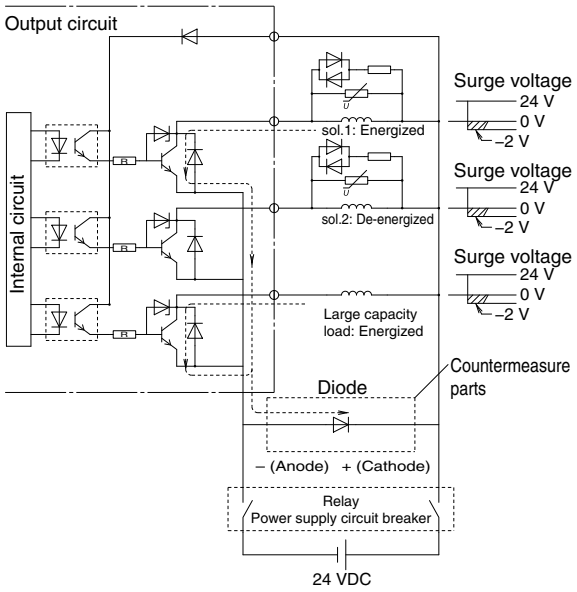

Figure 2. Surge intrusion circuit example (NPN outlet example) (24 VDC)

Light Indication

⚠Caution

When equipped with indicator light and surge voltage suppressor, the light window turns orange when solenoid a is energized, and it turns green when solenoid b is energized.

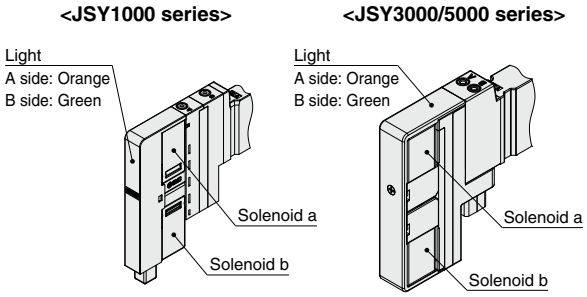

Changing Connector Entry Direction

⚠Caution

Connector direction for electrical entry of D-sub connector and flat ribbon cable <IP40> can be changed. If the directional change is required, slide the lever on the side of the connector block to the FREE position, and then change the direction as shown in the figure. Also, before connecting the connector, be sure to return the lever to the LOCK position. (If the lever is difficult to slide, move the connector a little bit to make it easier to slide the lever.)

If an excessive force is applied on the connector in the LOCK position, the connector block may be damaged. Also, using in such a way that the connector floats in the FREE position, it may cause the lead wire etc., to break.

∗ Direction cannot be changed for D-sub connector <IP67> or compact type.

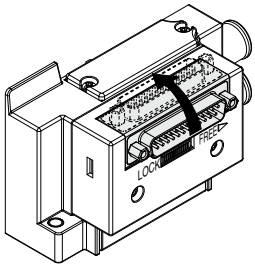

JSY1000/3000/5000 Series
Specific Product Precautions 4

Be sure to read this before handling the products. Refer to the back cover for safety instructions. For 3/4/5-port solenoid valve precautions, refer to the "Handling Precautions for SMC Products" and the "Operation Manual" on the SMC website: https://www.smcworld.com

How to Order Manifolds

⚠Caution

The letter "S" is indicated on manifold blocks for the JSY series as shown below. This indication refers to the type of substrate (single wiring) inside the manifold blocks. When there is no symbol, double wiring is used.
When the manifold specification sheet does not include a wiring specification, all stations will be double wiring specification. In this case, single and double solenoid valves can be mounted in any position, but when a single valve is used, there will be an unused control signal. To avoid this, indicate positions of manifold blocks for single wiring specification and double wiring specification on a manifold specification sheet. (Note that double, 3-or 4-position valves cannot be used for manifolds blocks with single wiring specification S.)

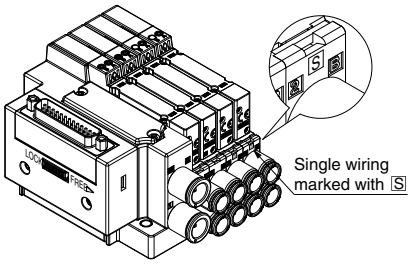

Substrate inside Manifolds

⚠Caution

The substrate inside of manifolds cannot be taken apart. Attempting to do so may damage parts.

Fixation of DIN Rail Mounting Type Manifolds

⚠Caution

1. When the manifold is fixed with bolts on a mounting surface etc., it can be operated just by fixing on both ends of the DIN rail if the bottom surface of the DIN rail is entirely in contact with the mounting surface when mounted horizontally. However, if it is used with other mounting or with side or reverse mounting, fix the DIN rail with bolts at regular intervals. As a guide, insert bolts in 2 locations for 2-5 stations, 3 locations for 6-10 stations, 4 locations for 11-15 stations, 5 locations for 16-20 stations and 6 locations for 21-24 stations.
2. When using the manifold with DIN rail in an environment where any vibration or impact is applied to it, the DIN rail itself may be broken. In particular, if the installation surface vibrates when mounting the manifold on the wall or if a load is directly applied to the manifold, the DIN rail may be broken, causing the manifold to drop. When any vibration, impact, or load is applied to the manifold, be sure to use the direct mounting manifold.

How to Replace One-touch Fittings

⚠Caution

By replacing One-touch fittings of manifold base, it is possible to change the connection diameter of the 4(A), 2(B), 1(P), 3/5(E) ports. When replacing the One-touch fittings, remove the clip or the plate before pulling the One-touch fittings off. Mount the One-touch fittings by following the removal procedure in reverse.
Use caution as it may cause air leakage if the clip and the plate are not inserted securely enough when they are switched. Refer to page 109 for part numbers of One-touch fittings.

■Connector connecting base

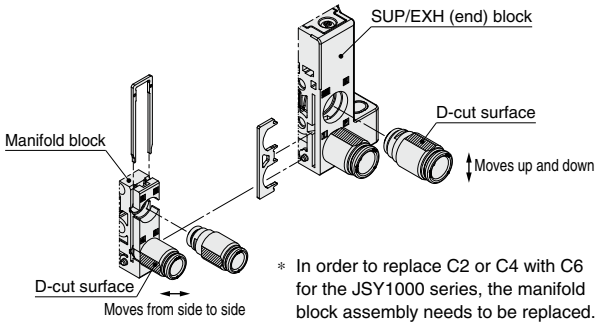

∗ In order to replace C2 or C4 with C6 for the JSY1000 series, the manifold block assembly needs to be replaced. Please select the manifold block assembly on page 107.
∗ Refer to page 109 for One-touch fitting, clip, and port plate part numbers.

<Assembly method>

· **SUP/EXH (end) block**
Fitting direction is specified when the fittings below are used. Assemble the fitting so that the D-cut surfaces of the fitting face up and down.

Fitting part no.: KQSY30-C8-X1336 (JSY1000)
KQSY50-C12-X1336 (JSY5000)

· **Manifold block**
Assemble the fitting so that the D-cut surfaces of the fitting face sideways.

Fitting part no.: KQSY10-C4-X1336 (JSY1000)
KQSY11-C6-X1336 (JSY1000)
KQSY30-C8-X1336 (JSY3000)
KQSY50-C12-X1336 (JSY5000)

JSY1000/3000/5000 Series
Specific Product Precautions 5

Be sure to read this before handling the products. Refer to the back cover for safety instructions. For 3/4/5-port solenoid valve precautions, refer to the "Handling Precautions for SMC Products" and the "Operation Manual" on the SMC website: https://www.smcworld.com

Other Tube Brands

⚠ Caution

1. When using other than SMC brand tube, confirm that the following specifications are satisfied with respect to the tube outside diameter tolerance.

1) Nylon tube	within ±0.1 mm
2) Soft nylon tube	within ±0.1 mm
3) Polyurethane tube	within +0.15 mm within –0.2 mm

Do not use tube which do not meet these outside diameter tolerances. It may not be possible to connect them, or they may cause other trouble, such as air leakage or the tube pulling out after connection.

One-touch Fittings

⚠ Caution

■ Tube attachment/detachment for One-touch fittings

1) Tube attachment

1. Take a tube having no flaws on its periphery and cut it off at a right angle. When cutting the tube, use tube cutters TK-1, 2 or 3. Do not use pliers, nippers or scissors, etc. If cutting is done with tools other than tube cutters, the tube may be cut diagonally or become flattened, etc., making a secure installation impossible, and causing problems such as the tube pulling out after installation or air leakage. Allow some extra length in the tube.
2. Grasp the tube and push it in slowly, inserting it securely all the way into the fitting.
3. After inserting the tube, pull on it lightly to confirm that it will not come out. If it is not installed securely all the way into the fitting, this can cause problems such as air leakage or the tube pulling out.

2) Tube detachment

Use the release tool when the removal of tube is difficult due to the tube size. Refer to page 109 for releasing tools.

1. Push in the release button sufficiently, pushing its collar equally around the circumference.
2. Pull out the tube while holding down the release button so that it does not come out. If the release button is not pressed down sufficiently, there will be increased bite on the tube and it will become more difficult to pull it out.
3. When the removed tube is to be used again, cut off the portion which has been chewed before reusing it. If the chewed portion of the tube is used as is, this can cause trouble such as air leakage or difficulty in removing the tube.

Fixing Method of JSY1000 Series Clamp Bracket

⚠ Caution

The clamp bracket fixing method for the JSY1000 series is different depending on wiring.

■ Wiring

<For D-sub connector/Flat ribbon cable/Spring type terminal block box/Lead wire/EX260/EX120>

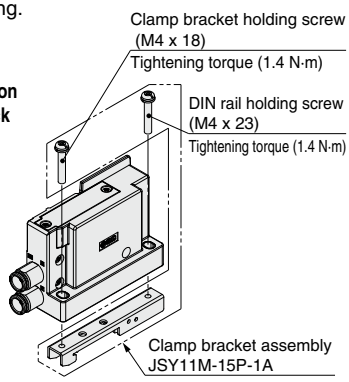

∗ When the DIN rail is not accommodated in the clamp bracket, loosen the DIN rail holding screw once and insert the DIN rail.

<For Terminal block box/EX600/EX250>

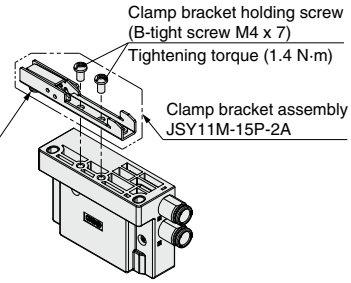

∗ If the tightening torque of the holding screws is too much, the SUP/EXH end block will be broken.

Installation

⚠ Caution

Even though the inlet pressure is within the operating pressure range, when the piping diameter is restricted due to size reduction of supply port (P), the flow will be insufficient. In this case, the valve does not switch completely and the cylinder may malfunction.

■ Trademark

DeviceNet™ is a trademark of ODVA.
EtherNet/IP™ is a trademark of ODVA.
CompoNet™ is a trademark of ODVA.
EtherCAT® is registered trademark and patented technology, licensed by Beckhoff Automation GmbH, Germany.

JJ5SY1-10F	JSY1000	Type 10/Side Ported	Plug-in Connector Connecting Base: D-sub Connector, Connector Entry Direction Adjustable <IP40>	**p. 19**
JJ5SY1-10FC	JSY1000	Type 10/Side Ported	Plug-in Connector Connecting Base: D-sub Connector, Compact Type <IP20>	**p. 19**
JJ5SY1-10L1	JSY1000	Type 10/Side Ported	Plug-in Connector Connecting Base: Lead Wire, 34 cores	**p. 53**
JJ5SY1-10L2	JSY1000	Type 10/Side Ported	Plug-in Connector Connecting Base: Lead Wire, 17 cores	**p. 53**
JJ5SY1-10L3	JSY1000	Type 10/Side Ported	Plug-in Connector Connecting Base: Lead Wire, 9 cores	**p. 53**
JJ5SY1-10P	JSY1000	Type 10/Side Ported	Plug-in Connector Connecting Base: Flat Ribbon Cable, Connector Entry Direction Adjustable (26 pins) <IP40>	**p. 19**
JJ5SY1-10PC	JSY1000	Type 10/Side Ported	Plug-in Connector Connecting Base: Flat Ribbon Cable, Compact Type (26 pins) <IP20>	**p. 19**
JJ5SY1-10PG	JSY1000	Type 10/Side Ported	Plug-in Connector Connecting Base: Flat Ribbon Cable, Connector Entry Direction Adjustable (20 pins) <IP40>	**p. 19**
JJ5SY1-10PGC	JSY1000	Type 10/Side Ported	Plug-in Connector Connecting Base: Flat Ribbon Cable, Compact Type (20 pins) <IP20>	**p. 19**
JJ5SY1-10PH	JSY1000	Type 10/Side Ported	Plug-in Connector Connecting Base: Flat Ribbon Cable, Connector Entry Direction Adjustable (10 pins) <IP40>	**p. 19**
JJ5SY1-10PHC	JSY1000	Type 10/Side Ported	Plug-in Connector Connecting Base: Flat Ribbon Cable, Compact Type (10 pins) <IP20>	**p. 19**
JJ5SY1-10S	JSY1000	Type 10/Side Ported	Plug-in Connector Connecting Base: EX250 Series	**p. 71**
JJ5SY1-10S□	JSY1000	Type 10/Side Ported	Plug-in Connector Connecting Base: EX260 Series	**p. 77**
JJ5SY1-10S3	JSY1000	Type 10/Side Ported	Plug-in Connector Connecting Base: EX120 Series	**p. 83**
JJ5SY1-10S6	JSY1000	Type 10/Side Ported	Plug-in Connector Connecting Base: EX600 Series	**p. 61**
JJ5SY1-10T	JSY1000	Type 10/Side Ported	Plug-in Connector Connecting Base: Terminal Block Box	**p. 41**
JJ5SY1-10TC	JSY1000	Type 10/Side Ported	Plug-in Connector Connecting Base: Spring Type Terminal Block Box	**p. 41**
JJ5SY3-10F	JSY3000	Type 10/Side Ported	Plug-in Connector Connecting Base: D-sub Connector, Connector Entry Direction Adjustable <IP40>	**p. 19**
JJ5SY3-10FC	JSY3000	Type 10/Side Ported	Plug-in Connector Connecting Base: D-sub Connector, Compact Type <IP20>	**p. 19**
JJ5SY3-10FW	JSY3000	Type 10/Side Ported	Plug-in Connector Connecting Base: D-sub Connector <IP67>	**p. 19**
JJ5SY3-10L1	JSY3000	Type 10/Side Ported	Plug-in Connector Connecting Base: Lead Wire, 34 cores	**p. 53**
JJ5SY3-10L2	JSY3000	Type 10/Side Ported	Plug-in Connector Connecting Base: Lead Wire, 17 cores	**p. 53**
JJ5SY3-10L3	JSY3000	Type 10/Side Ported	Plug-in Connector Connecting Base: Lead Wire, 9 cores	**p. 53**
JJ5SY3-10P	JSY3000	Type 10/Side Ported	Plug-in Connector Connecting Base: Flat Ribbon Cable, Connector Entry Direction Adjustable (26 pins) <IP40>	**p. 19**
JJ5SY3-10PC	JSY3000	Type 10/Side Ported	Plug-in Connector Connecting Base: Flat Ribbon Cable, Compact Type (26 pins) <IP20>	**p. 19**
JJ5SY3-10PG	JSY3000	Type 10/Side Ported	Plug-in Connector Connecting Base: Flat Ribbon Cable, Connector Entry Direction Adjustable (20 pins) <IP40>	**p. 19**
JJ5SY3-10PGC	JSY3000	Type 10/Side Ported	Plug-in Connector Connecting Base: Flat Ribbon Cable, Compact Type (20 pins) <IP20>	**p. 19**
JJ5SY3-10PH	JSY3000	Type 10/Side Ported	Plug-in Connector Connecting Base: Flat Ribbon Cable, Connector Entry Direction Adjustable (10 pins) <IP40>	**p. 19**
JJ5SY3-10PHC	JSY3000	Type 10/Side Ported	Plug-in Connector Connecting Base: Flat Ribbon Cable, Compact Type (10 pins) <IP20>	**p. 19**
JJ5SY3-10S	JSY3000	Type 10/Side Ported	Plug-in Connector Connecting Base: EX250 Series	**p. 71**
JJ5SY3-10S□	JSY3000	Type 10/Side Ported	Plug-in Connector Connecting Base: EX260 Series	**p. 77**
JJ5SY3-10S3	JSY3000	Type 10/Side Ported	Plug-in Connector Connecting Base: EX120 Series	**p. 83**
JJ5SY3-10S6	JSY3000	Type 10/Side Ported	Plug-in Connector Connecting Base: EX600 Series	**p. 61**
JJ5SY3-10T	JSY3000	Type 10/Side Ported	Plug-in Connector Connecting Base: Terminal Block Box	**p. 41**
JJ5SY3-10TC	JSY3000	Type 10/Side Ported	Plug-in Connector Connecting Base: Spring Type Terminal Block Box	**p. 41**
JJ5SY5-10F	JSY5000	Type 10/Side Ported	Plug-in Connector Connecting Base: D-sub Connector, Connector Entry Direction Adjustable <IP40>	**p. 19**
JJ5SY5-10FW	JSY5000	Type 10/Side Ported	Plug-in Connector Connecting Base: D-sub Connector <IP67>	**p. 19**
JJ5SY5-10L1	JSY5000	Type 10/Side Ported	Plug-in Connector Connecting Base: Lead Wire, 34 cores	**p. 53**
JJ5SY5-10L2	JSY5000	Type 10/Side Ported	Plug-in Connector Connecting Base: Lead Wire, 17 cores	**p. 53**
JJ5SY5-10L3	JSY5000	Type 10/Side Ported	Plug-in Connector Connecting Base: Lead Wire, 9 cores	**p. 53**
JJ5SY5-10P	JSY5000	Type 10/Side Ported	Plug-in Connector Connecting Base: Flat Ribbon Cable, Connector Entry Direction Adjustable (26 pins) <IP40>	**p. 19**
JJ5SY5-10PG	JSY5000	Type 10/Side Ported	Plug-in Connector Connecting Base: Flat Ribbon Cable, Connector Entry Direction Adjustable (20 pins) <IP40>	**p. 19**
JJ5SY5-10PH	JSY5000	Type 10/Side Ported	Plug-in Connector Connecting Base: Flat Ribbon Cable, Connector Entry Direction Adjustable (10 pins) <IP40>	**p. 19**
JJ5SY5-10S	JSY5000	Type 10/Side Ported	Plug-in Connector Connecting Base: EX250 Series	**p. 71**
JJ5SY5-10S□	JSY5000	Type 10/Side Ported	Plug-in Connector Connecting Base: EX260 Series	**p. 77**
JJ5SY5-10S3	JSY5000	Type 10/Side Ported	Plug-in Connector Connecting Base: EX120 Series	**p. 83**
JJ5SY5-10S6	JSY5000	Type 10/Side Ported	Plug-in Connector Connecting Base: EX600 Series	**p. 61**
JJ5SY5-10T	JSY5000	Type 10/Side Ported	Plug-in Connector Connecting Base: Terminal Block Box	**p. 41**
JJ5SY5-10TC	JSY5000	Type 10/Side Ported	Plug-in Connector Connecting Base: Spring Type Terminal Block Box	**p. 41**

⚠ Safety Instructions

These safety instructions are intended to prevent hazardous situations and/or equipment damage. These instructions indicate the level of potential hazard with the labels of **"Caution," "Warning"** or **"Danger."** They are all important notes for safety and must be followed in addition to International Standards (ISO/IEC)*1), and other safety regulations.

⚠ Caution: **Caution** indicates a hazard with a low level of risk which, if not avoided, could result in minor or moderate injury.

⚠ Warning: **Warning** indicates a hazard with a medium level of risk which, if not avoided, could result in death or serious injury.

⚠ Danger : **Danger** indicates a hazard with a high level of risk which, if not avoided, will result in death or serious injury.

*1) ISO 4414: Pneumatic fluid power – General rules relating to systems.
ISO 4413: Hydraulic fluid power – General rules relating to systems.
IEC 60204-1: Safety of machinery – Electrical equipment of machines.
(Part 1: General requirements)
ISO 10218-1: Manipulating industrial robots – Safety.
etc.

⚠ Warning

1. The compatibility of the product is the responsibility of the person who designs the equipment or decides its specifications.

Since the product specified here is used under various operating conditions, its compatibility with specific equipment must be decided by the person who designs the equipment or decides its specifications based on necessary analysis and test results. The expected performance and safety assurance of the equipment will be the responsibility of the person who has determined its compatibility with the product. This person should also continuously review all specifications of the product referring to its latest catalog information, with a view to giving due consideration to any possibility of equipment failure when configuring the equipment.

2. Only personnel with appropriate training should operate machinery and equipment.

The product specified here may become unsafe if handled incorrectly. The assembly, operation and maintenance of machines or equipment including our products must be performed by an operator who is appropriately trained and experienced.

3. Do not service or attempt to remove product and machinery/equipment until safety is confirmed.

1. The inspection and maintenance of machinery/equipment should only be performed after measures to prevent falling or runaway of the driven objects have been confirmed.
2. When the product is to be removed, confirm that the safety measures as mentioned above are implemented and the power from any appropriate source is cut, and read and understand the specific product precautions of all relevant products carefully.
3. Before machinery/equipment is restarted, take measures to prevent unexpected operation and malfunction.

4. Contact SMC beforehand and take special consideration of safety measures if the product is to be used in any of the following conditions.

1. Conditions and environments outside of the given specifications, or use outdoors or in a place exposed to direct sunlight.
2. Installation on equipment in conjunction with atomic energy, railways, air navigation, space, shipping, vehicles, military, medical treatment, combustion and recreation, or equipment in contact with food and beverages, emergency stop circuits, clutch and brake circuits in press applications, safety equipment or other applications unsuitable for the standard specifications described in the product catalog.
3. An application which could have negative effects on people, property, or animals requiring special safety analysis.
4. Use in an interlock circuit, which requires the provision of double interlock for possible failure by using a mechanical protective function, and periodical checks to confirm proper operation.

⚠ Caution

1. The product is provided for use in manufacturing industries.

The product herein described is basically provided for peaceful use in manufacturing industries.
If considering using the product in other industries, consult SMC beforehand and exchange specifications or a contract if necessary.
If anything is unclear, contact your nearest sales branch.

Limited warranty and Disclaimer/ Compliance Requirements

The product used is subject to the following "Limited warranty and Disclaimer" and "Compliance Requirements".
Read and accept them before using the product.

Limited warranty and Disclaimer

1. The warranty period of the product is 1 year in service or 1.5 years after the product is delivered, whichever is first.*2)
   Also, the product may have specified durability, running distance or replacement parts. Please consult your nearest sales branch.
2. For any failure or damage reported within the warranty period which is clearly our responsibility, a replacement product or necessary parts will be provided.
   This limited warranty applies only to our product independently, and not to any other damage incurred due to the failure of the product.
3. Prior to using SMC products, please read and understand the warranty terms and disclaimers noted in the specified catalog for the particular products.

***2) Vacuum pads are excluded from this 1 year warranty.**
A vacuum pad is a consumable part, so it is warranted for a year after it is delivered.
Also, even within the warranty period, the wear of a product due to the use of the vacuum pad or failure due to the deterioration of rubber material are not covered by the limited warranty.

Compliance Requirements

1. The use of SMC products with production equipment for the manufacture of weapons of mass destruction (WMD) or any other weapon is strictly prohibited.
2. The exports of SMC products or technology from one country to another are governed by the relevant security laws and regulations of the countries involved in the transaction. Prior to the shipment of a SMC product to another country, assure that all local rules governing that export are known and followed.

⚠ Caution

SMC products are not intended for use as instruments for legal metrology.

Measurement instruments that SMC manufactures or sells have not been qualified by type approval tests relevant to the metrology (measurement) laws of each country. Therefore, SMC products cannot be used for business or certification ordained by the metrology (measurement) laws of each country.

UNIT CONVERSIONS

	unit	conversion	result
length	m	x 3.28	ft
	mm	x 0.04	in
mass	g	x 0.04	oz
volume	cm^3	÷ 16.387	in^3
	L	x 61.024	in^3
speed	mm/s	÷ 25.4	in/s
pressure	MPa	x 145	psi
	kPa	÷ 6.895	psi
temperature	°C	x1.8 then add 32	°F
torque	N·m	x 0.738	ft-lb
force	N	÷ 4.448	lbf
flow	L/min	÷ 28.317	cfm

Global Manufacturing, Distribution and Service Network

Worldwide Subsidiaries

EUROPE

AUSTRIA
SMC Pneumatik GmbH (Austria)

BELGIUM
SMC Pneumatics N.V./S.A.

BULGARIA
SMC Industrial Automation Bulgaria EOOD

CROATIA
SMC Industrijska Automatika d.o.o.

CZECH REPUBLIC
SMC Industrial Automation CZ s.r.o.

DENMARK
SMC Pneumatik A/S

ESTONIA
SMC Pneumatics Estonia

FINLAND
SMC Pneumatics Finland OY

FRANCE
SMC Pneumatique S.A.

GERMANY
SMC Pneumatik GmbH

GREECE
SMC Hellas EPE

HUNGARY
SMC Hungary Ipari Automatizálási Kft.

IRELAND
SMC Pneumatics (Ireland) Ltd.

ITALY
SMC Italia S.p.A.

KAZAKHSTAN
LLP "SMC Kazakhstan"

LATVIA
SMC Pneumatics Latvia SIA

LITHUANIA
UAB "SMC Pneumatics"

NETHERLANDS
SMC Pneumatics B.V.

NORWAY
SMC Pneumatics Norway AS

POLAND
SMC Industrial Automation Polska Sp. z o.o.

ROMANIA
SMC Romania S.r.l.

RUSSIA
SMC Pneumatik LLC.

SLOVAKIA
SMC Priemyselná Automatizácia, Spol s.r.o.

SLOVENIA
SMC Industrijska Avtomatika d.o.o.

SPAIN / PORTUGAL
SMC España, S.A.

SWEDEN
SMC Pneumatics Sweden AB

SWITZERLAND
SMC Pneumatik AG

TURKEY
SMC Pnömatik Sanayi Ticaret ve Servis A.Ş.

UK
SMC Pneumatics (U.K.) Ltd.

ASIA / OCEANIA

AUSTRALIA
SMC Pneumatics (Australia) Pty. Ltd.

CHINA
SMC (China) Co., Ltd.
SMC Pneumatics (Guangzhou) Ltd.

HONG KONG
SMC Pneumatics (Hong kong) Ltd.

INDIA
SMC Pneumatics (India) Pvt. Ltd.

INDONESIA
PT. SMC Pneumatics Indonesia

JAPAN
SMC Corporation

MALAYSIA
SMC Pneumatics (S.E.A.) Sdn. Bhd.

NEW ZEALAND
SMC Pneumatics (N.Z.) Ltd.

PHILIPPINES
Shoketsu SMC Corporation

SINGAPORE
SMC Pneumatics (S.E.A.) Pte. Ltd.

SOUTH KOREA
SMC Pneumatics Korea Co., Ltd.

TAIWAN
SMC Pneumatics (Taiwan) Co., Ltd.

THAILAND
SMC (Thailand) Ltd.

UNITED ARAB EMIRATES
SMC Pneumatics Middle East FZE

VIETNAM
SMC Pneumatics (VN) Co., Ltd

AFRICA

SOUTH AFRICA
SMC Pneumatics (South Africa) Pty Ltd

NORTH, CENTRAL & SOUTH AMERICA

ARGENTINA
SMC Argentina S.A.

BOLIVIA
SMC Pneumatics Bolivia S.R.L.

BRAZIL
SMC Pneumáticos do Brasil Ltda.

CANADA
SMC Pneumatics (Canada) Ltd.

CHILE
SMC Pneumatics (Chile) S.A.

COLOMBIA
SMC Colombia Sucursal de SMC Chile, S.A.

MEXICO
SMC Corporation (Mexico) S.A. de C.V.

PERU
SMC Corporation Peru S.A.C.

USA
SMC Corporation of America

VENEZUELA
SMC Neumatica Venezuela S.A.

U.S. & Canadian Sales Offices

WEST
- Austin
- Dallas
- Los Angeles
- Phoenix
- Portland
- San Jose

CENTRAL
- Chicago
- Cincinnati
- Cleveland
- Detroit
- Des Moines
- Grand Rapids
- Indianapolis
- Kansas City
- Milwaukee
- Minneapolis
- St. Louis

EAST
- Albany
- Atlanta
- Birmingham
- Boston
- Charlotte
- Knoxville
- Nashville
- New Jersey
- Rochester
- Tampa

CANADA
- Vancouver
- Toronto
- Windsor
- Montreal

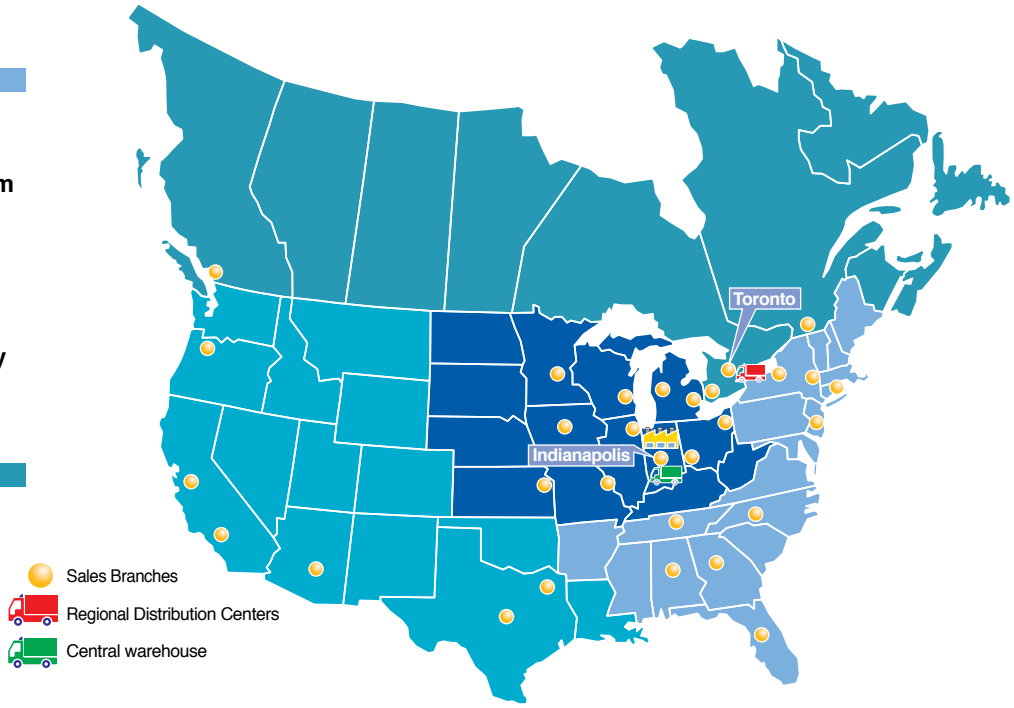

SMC Corporation of America
10100 SMC Blvd., Noblesville, IN 46060
www.smcusa.com

SMC Automation (Canada) Ltd.
www.smcautomation.ca

(800) SMC.SMC1 (762-7621)
e-mail: **sales@smcusa.com**
International inquiries: **www.smcworld.com**

© 2020 SMC Corporation of America, All Rights Reserved.
All reasonable efforts to ensure the accuracy of the information detailed in this catalog were made at the time of publishing.
However, SMC can in no way warrant the information herein contained as specifications are subject to change without notice.