SMC Corporation
Akihabara UDX 15F,
4-14-1, Sotokanda, Chiyoda-ku,
Tokyo 101-0021, JAPAN
http://www.smcworld.com
©2011 SMC Corporation All Rights Reserved
09-E555
D-DN Printing PW 7850SZ

SMC Information

Clamp Cylinder Slim Style

Series C(L)KG/C(L)KP-X2095

ø25, ø32, ø40

The smallest class of clamp cylinder in the world

■ø25 is available

Weight 380 g Length 186.7 mm
(ø25, 50 stroke without speed controller or auto switch.)

■Comparison with conventional model

Weight reduced by up to 48%, total length reduced by 18%

	Weight (kg)	Length (mm)
Clamp Cylinder CKG-X2095	0.67 (1.31)	146.7 + Stroke (192 + Stroke)
Clamp Cylinder with Lock CLKP-F-X2095	0.97 (1.70)	182.2 + Stroke (236 + Stroke)

Comparison with ø40, 50 stroke with double knuckle joint and speed controller.
The values in the ( ) are for conventional model.

Compact auto switch (D-P3DW)

Magnetic field resistant 2-color indication solid state auto switch

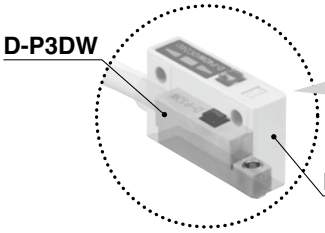

Auto switch product volume reduced by 70%

The auto switch mounting position is available from 3 directions.

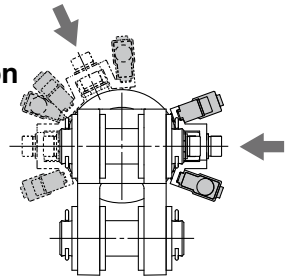

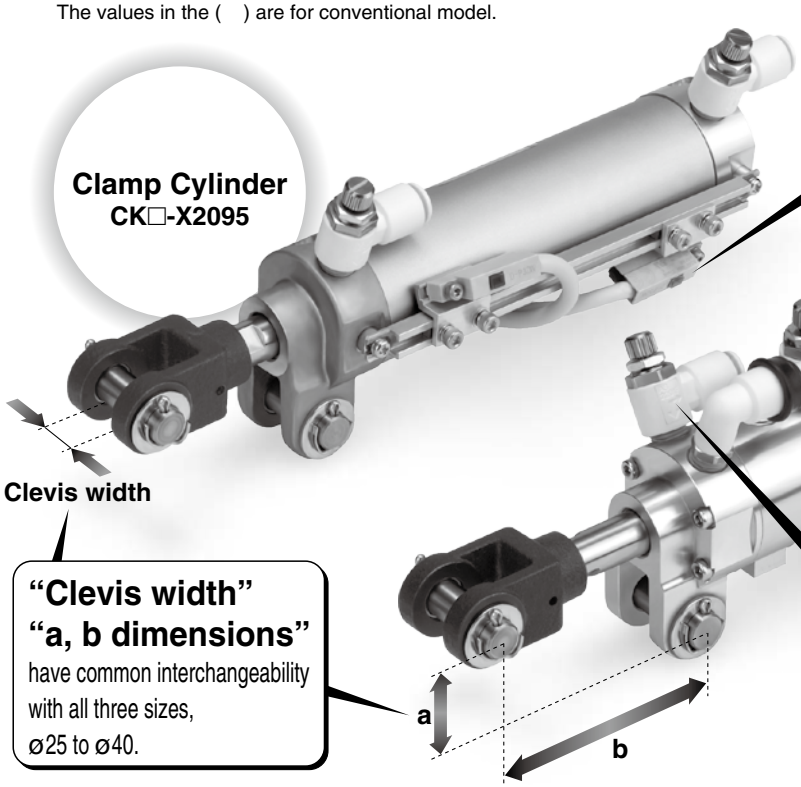

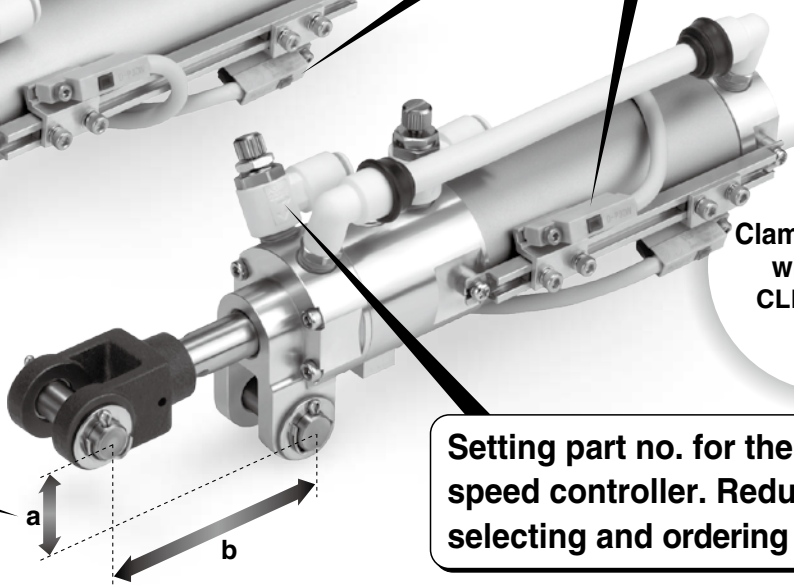

"Clevis width" "a, b dimensions" have common interchangeability with all three sizes, ø25 to ø40.

Setting part no. for the model with speed controller. Reduction in selecting and ordering labor.

Variations

Model	Type		Series	Bore size (mm)	Stroke (mm)	Clevis width	End bracket	Option
Clamp Cylinder	Built-in standard magnet type	D-P3DW D-P4DW	CKG	25, 32, 40	50, 75, 100 125, 150	A: 9 mm B: 12.5 mm	Double knuckle joint	Speed controllers with One-touch fittings (Both sides)
	Built-in strong magnet type	D-P7	CKP					
Clamp Cylinder with Lock	Built-in standard magnet type	D-P3DW D-P4DW	CLKG					
	Built-in strong magnet type	D-P7	CLKP					

Clamp Cylinder Slim Style

Series CKG/CKP-X2095

ø25, ø32, ø40

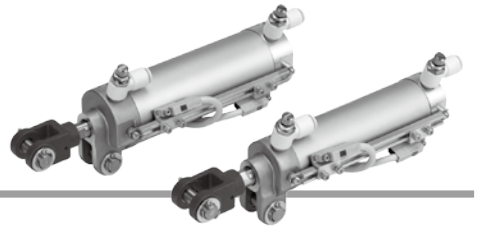

How to Order

Built-in standard magnet type with AC magnetic field resistant auto switch

CKG B 32 – 50 Y S – P3DWSC □ – X2095

Built-in strong magnet type with magnetic field resistant auto switch

CKP B 32 – 50 Y S – P79WSE □ – X2095

Clevis width

A	9 mm
B	12.5 mm

∗ Clevis width symbol
For A: Clevis width B (12.5 mm) plus two 1.6 mm washers, making the clevis width 9 mm.
Accessories in the form of pins/flat washers (4 pcs.)/cotter pins (2 pcs.) are included (but not assembled).
For B: Accessories in the form of pins/flat washers (2 pcs.)/cotter pins (2 pcs.) are included (but not assembled).

Bore size

25	25 mm
32	32 mm
40	40 mm

Cylinder stroke

Bore size	Standard stroke
ø25 to ø40	50, 75, 100, 125, 150

End bracket

Y	Double knuckle joint

∗ Clevis width symbol
For A: Clevis width B (12.5 mm) plus two 1.6 mm washers, making the clevis width 9 mm.
Accessories in the form of pins/flat washers (4 pcs.)/cotter pins (2 pcs.) are included (but not assembled).
For B: Accessories in the form of pins/flat washers (2 pcs.)/cotter pins (2 pcs.) are included (but not assembled).

Option

Nil	None
S	With speed controller

∗ Speed controllers (2 pcs.) are shipped together (but not assembled).

Number of auto switches

Nil	2 pcs.
S	1 pc.
n	"n" pcs. (n = 3, 4, 5···n)

Slim Style

Auto switch
For applicable auto switch model, refer to the Table 1.

Nil	Without auto switch (built-in magnet) Without switch mounting rail
P	Without auto switch (built-in magnet) With switch mounting rail

∗ Auto switch rails are shipped assembled.
∗ Auto switches are shipped together (but not assembled).
∗ Auto switch rails are shipped with mounting locations attached on the right side, as you look from the rod end.

Built-in Standard (Strong) Magnet Cylinder Part No.

1) Built-in standard (strong) magnet type without auto switch and switch mounting rail
Symbol for the auto switch type is "Nil" as shown below.
CKG: (Example) CKGA32-50Y-X2095
CKP: (Example) CKPA32-50Y-X2095

2) Built-in standard (strong) magnet type without auto switch, with switch mounting rail
Symbol for the auto switch type is "P" as shown below.
CKG: (Example) CKGA32-50Y-P-X2095
CKP: (Example) CKPA32-50Y-P-X2095

Table 1

Applicable Magnetic Field Resistant Auto Switches/Refer to pages 1719 to 1827 in Best Pneumatics No. 3 and the catalog CAT.ES20-201 for detailed auto switch specifications.

Applicable cylinder series	Type	Auto switch model	Applicable magnetic field	Electrical entry	Indicator light	Wiring (Pin no. in use)	Load voltage	Lead wire length	Applicable load
Series CKG	Solid state auto switch	P3DWSC	AC magnetic field (Single-phase AC welding magnetic field)	Pre-wired connector	2-color indication	2-wire (3–4)	24 VDC	0.3 m	Relay, PLC Note 1)
		P3DWSE				2-wire (1–4)			
		P3DW		Grommet		2-wire		0.5 m	
		P3DWL						3 m	
		P3DWZ						5 m	
		P4DWSC		Pre-wired connector		2-wire (3–4)		0.3 m	
		P4DWSE				2-wire (1–4)			
		P4DWL		Grommet		2-wire		3 m	
		P4DWZ						5 m	
Series CKP	Reed auto switch	P79WSE	DC/AC magnetic field	Pre-wired connector	2-color indication	2-wire (1–4)	24 VDC	0.3 m	
		P74-376			1-color indication	2-wire (3–4)		0.5 m	
		P74GSC						0.3 m	
		P74L		Grommet		2-wire	24 VDC 100 VAC	3 m	
		P74Z						5 m	

Note 1) PLC: Programmable Logic Controller
Note 2) There are other applicable auto switches other than the listed above. For details, refer to page 15.
Note 3) Refer to page 16 and 17 when ordering the auto switch mounting bracket assembly or switch mounting rail assembly.

Standard Stroke

Bore size (mm)	Standard stroke (mm)
25, 32, 40	50, 75, 100, 125, 150

Refer to pages 15 to 17 for cylinders with auto switches.

- Auto Switch Proper Mounting Position (Detection at Stroke End) and Its Mounting Height
- Minimum Stroke for Auto Switch Mounting
- Operating Range
- How to Mount and Move the Auto Switch
- Auto Switch Rail Assembly Part No.

Specifications

Bore size (mm)	25	32	40
Fluid	Air		
Proof pressure	1.5 MPa		
Maximum operating pressure	1.0 MPa		
Minimum operating pressure	0.05 MPa		
Ambient and fluid temperature	-10°C to 60°C		
Piston speed	50 to 500 mm/s		
Cushion	Rubber bumper		
Lubrication	Non-lube		
Stroke length tolerance Note 1)	$^{+1.0}_{0}$		
Mounting Note 2)	Double clevis		

∗ Refer to our website or Series CK1 in Best Pneumatics No. 3 for “Safety Instructions” and “Specific Product Precautions”.
Note 1) Stroke length tolerance does not include the amount of bumper change.
Note 2) Clevis pin, cotter pin, flat washer are equipped as a standard.

Clevis width	9 mm Note)	CKGA/CKPA
	12.5 mm	CKGB/CKPB

Note) 1.6 mm thick washer attached to 12.5 mm.

Option

Symbol	Description	Part no.
S	Flame resistant speed controllers with One-touch fittings	**AS2201F-01-06W2** Port size: R1/8 Applicable tubing O.D. mm: ø6 Control method: Meter-out type

Theoretical Output

Unit: N

Bore size (mm)	Rod size (mm)	Operating direction	Piston area (mm²)	Operating pressure (MPa)			
				0.3	0.4	0.5	0.6
25	12	OUT	491	147	196	246	295
		IN	378	113	151	189	227
32	12	OUT	804	241	322	402	482
		IN	691	207	276	346	415
40	12	OUT	1260	378	504	630	756
		IN	1147	344	459	574	688

Weight (Basic weight includes the double knuckle joint and auto switch rail at 0 stroke.)

Unit: kg

Bore size (mm)		25	32	40
Series CKG□	Basic weight (0 mm stroke)	0.30	0.37	0.51
	Additional weight per 25 mm stroke	0.04	0.05	0.06
Series CKP□	Basic weight (0 mm stroke)	0.31	0.38	0.53
	Additional weight per 25 mm stroke	0.04	0.05	0.06
Speed controller		0.04	0.04	0.04

Note) The above values do not include the weight of the auto switch and auto switch mounting bracket.

Calculation Example) **CKG□32-100YS-P-X2095**

- Basic weight·····0.37 (ø32)
- Additional weight·····0.05/25 stroke
- Speed controller·····0.04 (S)
- Cylinder stroke·····100 stroke

0.37 + 0.05 x 100/25 + 0.04 = 0.61 kg

Construction: CKG□/CKP□25, 32, 40

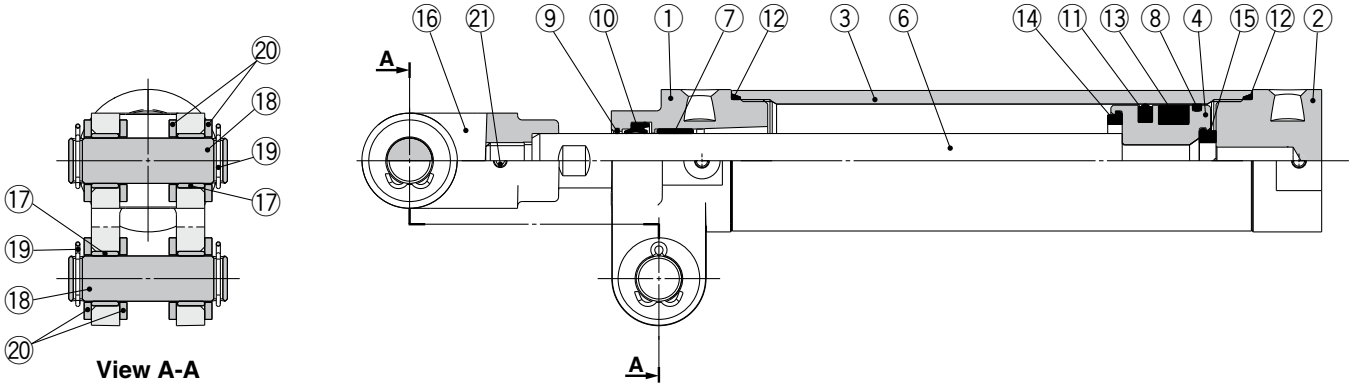

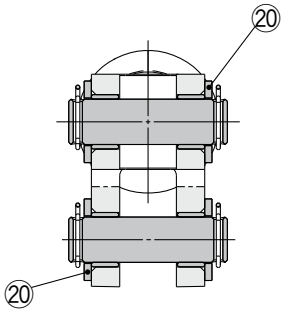

Clevis width symbol: B

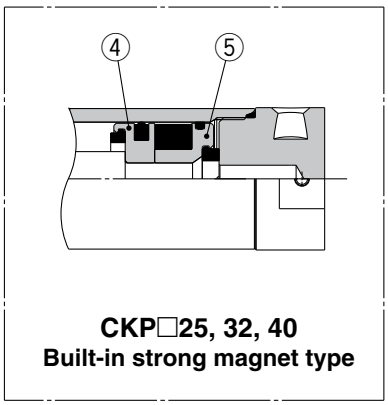

CKP□25, 32, 40
Built-in strong magnet type

Component Parts

No.	Description	Material	Qty.	Note
1	**Rod cover**	Aluminum alloy	1	Trivalent chromated
2	**Head cover**	Aluminum alloy	1	Hard anodized
3	**Cylinder tube**	Aluminum alloy	1	Hard anodized
4	**Piston**	Aluminum alloy	1	Trivalent chromated: CKG□
	PistonA	Aluminum alloy		Trivalent chromated: CKP□
5	**PistonB**	Aluminum alloy	1	Trivalent chromated: CKP□
6	**Piston rod**	Stainless steel	1	Hard chrome plated: ø25
		Structural steel		Hard chrome plated: ø32, ø40
7	**Bushing**	Oil-impregnated sintered alloy	1	
8	**Wear ring**	Resin	1	
9	**Coil scraper**	Bronze	1	
10	**Rod seal**	NBR	1	
11	**Piston seal**	NBR	1	
12	**Tube gasket**	NBR	2	

No.	Description	Material	Qty.	Note
13	**Magnet**	—	1	
14	**Bumper**	Urethane rubber	1	Rod end
15	**Bumper**	Urethane rubber	1	Head end
16	**Double knuckle joint**	Cast iron	1	Manganese phosphate coating
17	**Clevis bushing**	Steel strip + PTFE	4	
18	**Clevis pin/Knuckle pin**	Structural steel	2	
19	**Cotter pin**	Steel wire	4	Zinc trivalent chromated
20	**Flat washer**	Steel strip	8	Nickel plated: Clevis width symbol A
			4	Nickel plated: Clevis width symbol B
21	**Spring pin**	Tool steel	1	

Replacement Parts/Seal Kit

Bore size (mm)	Order no.	Note
25	CKA25-X2095-PS	Set of nos. above ⑩, ⑪, ⑫
32	CKA32-X2095-PS	
40	CKA40-X2095-PS	

Dimensions

CKG□/CKP□25, 32, 40

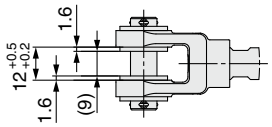

CK□A25, 32, 40
(Clevis width symbol: A)

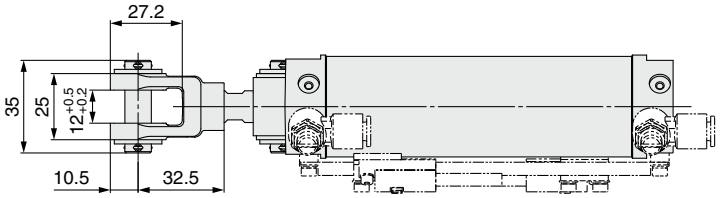

CK□B25, 32, 40
(Clevis width symbol: B)

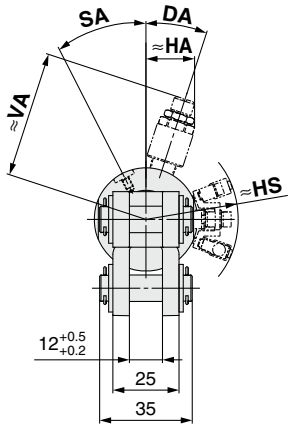

CK□B25, 32, 40
(Clevis width symbol: B)

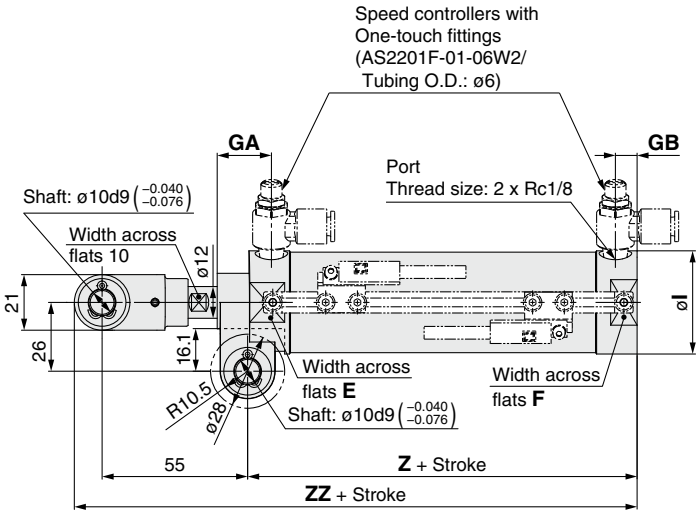

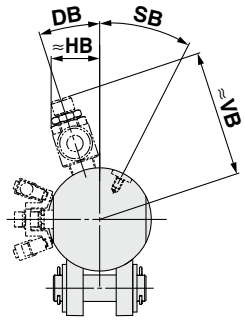

CK□B25, 32, 40
(Clevis width symbol: B)

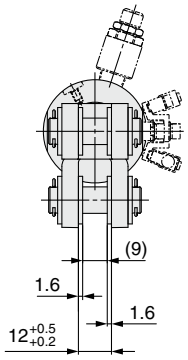

CK□A25, 32, 40
(Clevis width symbol: A)

Pin (For Clevis/Double Knuckle Joint)

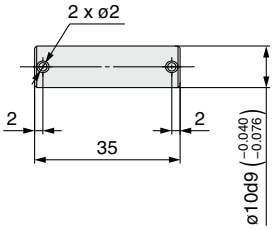

Part no.	Applicable cylinder
CKA-X2095-P02	Series CK□A25 to 40 Series CLK□A25 to 40
CKB-X2095-P02	Series CK□B25 to 40 Series CLK□B25 to 40

∗ Cotter pins and flat washers are provided as a standard.

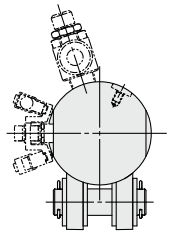

CK□A25, 32, 40
(Clevis width symbol: A)

(mm)

Symbol / Bore size	DA	DB	E	F	GA	GB	HA		HB		HS	øI	SA	SB	VA		VB		Z	ZZ
							MAX.	MIN.	MAX.	MIN.					MAX.	MIN.	MAX.	MIN.		
25	14°	14°	29.5	28.5	20.5	7.5	15.6	14.9	15.6	14.9	31.9	32	25°	25°	49.3	44.3	49.3	44.3	71.2	136.7
32	18°	18°	36	35	20.5	8.2	19.5	18.3	19.5	18.3	35.7	39	27°	27°	52.8	47.3	52.8	47.3	72.2	137.7
40	21°	21°	44.5	43.5	20.5	11	24	22.2	24	22.2	39.6	48	22°	22°	57.3	52.3	57.3	52.3	81.2	146.7

Clamp Cylinder with Lock Slim Style

Series CLKG/CLKP-X2095

ø25, ø32, ø40

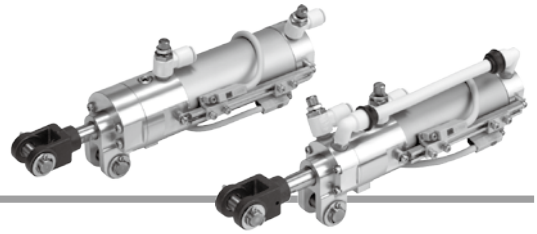

Unlock-port separate piping type is available.
Refer to page 18.

How to Order

Built-in standard magnet type with AC magnetic field resistant auto switch

CLKG B 32 – 50 Y S – B – P3DWSC ☐ – X2095

Built-in strong magnet type with magnetic field resistant auto switch

CLKP B 32 – 50 Y S – B – P79WSE ☐ – X2095

Clevis width

A	9 mm
B	12.5 mm

∗ Clevis width symbol
For A: Clevis width B (12.5 mm) plus two 1.6 mm washers, making the clevis width 9 mm.
Accessories in the form of pins/flat washers (4 pcs.)/cotter pins (2 pcs.) are included (but not assembled).
For B: Accessories in the form of pins/flat washers (2 pcs.)/cotter pins (2 pcs.) are included (but not assembled).

Bore size

25	25 mm
32	32 mm
40	40 mm

Cylinder stroke

Bore size	Standard stroke
ø25 to ø40	50, 75, 100, 125, 150

End bracket

Y	Double knuckle joint

∗ Clevis width symbol
For A: Clevis width B (12.5 mm) plus two 1.6 mm washers, making the clevis width 9 mm.
Accessories in the form of pins/flat washers (4 pcs.)/cotter pins (2 pcs.) are included (but not assembled).
For B: Accessories in the form of pins/flat washers (2 pcs.)/cotter pins (2 pcs.) are included (but not assembled).

Option

Nil	None
S	With speed controller

∗ Speed controllers (2 pcs.) are shipped together (but not assembled).

Locking direction

B	Retraction locking
F	Extension locking

Number of auto switches

Nil	2 pcs.
S	1 pc.
n	"n" pcs. (n = 3, 4, 5···n)

Slim Style

Auto switch

For applicable auto switch model, refer to the Table 1.

Nil	Without auto switch (built-in magnet) Without switch mounting rail
P	Without auto switch (built-in magnet) With switch mounting rail

∗ Auto switch rails are shipped assembled.
∗ Auto switches are shipped together (but not assembled).
∗ Auto switch rails are shipped with mounting locations attached on the right side, as you look from the rod end.

Built-in Standard (Strong) Magnet Cylinder Part No.

1) Built-in standard (strong) magnet type without auto switch and switch mounting rail
Symbol for the auto switch type is "Nil" as shown below.
CLKG: (Example) CLKGA32-50Y-B-X2095
CLKP: (Example) CLKPA32-50Y-B-X2095

2) Built-in standard (strong) magnet type without auto switch, with switch mounting rail
Symbol for the auto switch type is "P" as shown below.
CLKG: (Example) CLKGA32-50Y-B-P-X2095
CLKP: (Example) CLKPA32-50Y-B-P-X2095

Table 1

Applicable Magnetic Field Resistant Auto Switches

/Refer to pages 1719 to 1827 in Best Pneumatics No. 3 and the catalog CAT.ES20-201 for detailed auto switch specifications.

Applicable cylinder series	Type	Auto switch model	Applicable magnetic field	Electrical entry	Indicator light	Wiring (Pin no. in use)	Load voltage	Lead wire length	Applicable load
Series CLKG	Solid state auto switch	P3DWSC	AC magnetic field (Single-phase AC welding magnetic field)	Pre-wired connector	2-color indication	2-wire (3–4)	24 VDC	0.3 m	Relay, PLC Note 1)
		P3DWSE				2-wire (1–4)			
		P3DW		Grommet		2-wire		0.5 m	
		P3DWL						3 m	
		P3DWZ						5 m	
		P4DWSC		Pre-wired connector		2-wire (3–4)		0.3 m	
		P4DWSE				2-wire (1–4)			
		P4DWL		Grommet		2-wire		3 m	
		P4DWZ						5 m	
Series CLKP	Reed auto switch	P79WSE	DC/AC magnetic field	Pre-wired connector	2-color indication	2-wire (1–4)	24 VDC	0.3 m	
		P74-376			1-color indication	2-wire (3–4)		0.5 m	
		P74GSC						0.3 m	
		P74L		Grommet		2-wire	24 VDC 100 VAC	3 m	
		P74Z						5 m	

Note 1) PLC: Programmable Logic Controller
Note 2) There are other applicable auto switches other than the listed above. For details, refer to page 15.
Note 3) Refer to page 16 and 17 when ordering the auto switch mounting bracket assembly or switch mounting rail assembly.

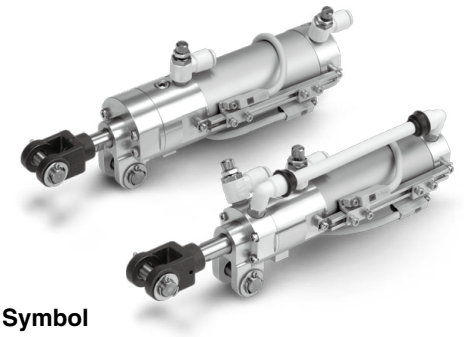

Symbol

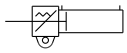

Retraction locking type

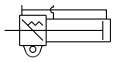

Extension locking type

Standard Stroke

Bore size (mm)	Standard stroke (mm)
25, 32, 40	50, 75, 100, 125, 150

Refer to pages 15 to 17 for cylinders with auto switches.

- Auto Switch Proper Mounting Position (Detection at Stroke End) and Its Mounting Height
- Minimum Stroke for Auto Switch Mounting
- Operating Range
- How to Mount and Move the Auto Switch
- Auto Switch Rail Assembly Part No.

Manually Unlocking

⚠Warning

①**Never remove the protective cover under any circumstances.**

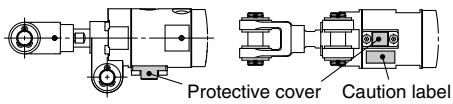

②**After confirming safety, operate the manual release following the steps shown below.**

Carefully confirm that no one is inside the load movement range, etc., and that there is no danger even if the load moves suddenly.

Manually unlocking (ø25 to ø40)

Extension locking

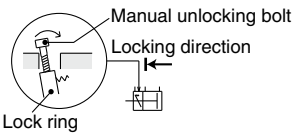

1) For ø25, remove the dust cover. For ø32 and ø40, remove the plug.
2) Screw a manual unlocking bolt (a conventional bolt of M3 x 0.5 x 15L) into the lock ring threads as shown above, and lightly push the bolt in the direction of the arrow (head side) to unlock.

Retraction locking

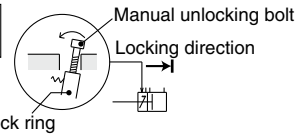

1) For ø25, remove the dust cover. For ø32 and ø40, remove the plug.
2) Screw a manual unlocking bolt (a conventional bolt of M3 x 0.5 x 15L) into the lock ring threads as shown above, and lightly push the bolt in the direction of the arrow (rod side) to unlock.

Specifications

Bore size	25	32	40
Action	Double acting, Single rod		
Fluid	Air		
Proof pressure	1.5 MPa		
Maximum operating pressure	1.0 MPa		
Minimum operating pressure	0.2 MPa		
Locking action	Spring locking		
Locking pressure	0.05 MPa		
Locking direction	One direction (Retraction, Extension)		
Lock holding force N (Max. static load)	Equivalent to 0.5 MPa		
	245	402	629
Lock application	Drop prevention, Position holding		
Ambient and fluid temperature	-10ºC to 60ºC		
Lubrication	Non-lube		
Piston speed	50 to 500 mm/s		
Stroke length tolerance Note 1)	$^{+1.0}_{0}$		
Cushion	Rubber bumper		
Mounting Note 2)	Double clevis		

∗ Refer to our website or Series CLK2 in Best Pneumatics No. 3 for "Safety Instructions" and "Specific Product Precautions".
Note 1) Stroke length tolerance does not include the amount of bumper change.
Note 2) Clevis pin, cotter pin, flat washer are equipped as a standard.

Clevis width	9 mm Note)	CLKGA/CLKPA
	12.5 mm	CLKGB/CLKPB

Note) 1.6 mm thick washer attached to 12.5 mm.

Option

Symbol	Description	Part no.
S	Flame resistant speed controllers with One-touch fittings	**AS2201F-01-06W2** Port size: R1/8 Applicable tubing O.D. mm: ø6 Control method: Meter-out type

Theoretical Output

Unit: N

Bore size (mm)	Rod size (mm)	Operating direction	Piston area (mm^2)	Operating pressure (MPa)			
				0.3	0.4	0.5	0.6
25	12	OUT	491	147	196	246	295
		IN	378	113	151	189	227
32	12	OUT	804	241	322	402	482
		IN	691	207	276	346	415
40	12	OUT	1260	378	504	630	756
		IN	1147	344	459	574	688

Weight (Basic weight includes the double knuckle joint and auto switch rail at 0 stroke.)

Unit: kg

Bore size (mm)		25	32	40
Series CLKG□	Basic weight (0 mm stroke)	B: 0.39 F: 0.40	B: 0.58 F: 0.60	B: 0.76 F: 0.78
	Additional weight per 25 mm stroke	0.04	0.05	0.06
Series CLKP□	Basic weight (0 mm stroke)	B: 0.39 F: 0.40	B: 0.59 F: 0.62	B: 0.78 F: 0.81
	Additional weight per 25 mm stroke	0.04	0.05	0.06
Speed controller		0.04	0.04	0.04

Note) The above values do not include the weight of the auto switch and auto switch mounting bracket.

Calculation Example) **CLKG□32-100YS-B-P-X2095**

- Basic weight·····0.58 (ø32)
- Additional weight·····0.05/25 stroke
- Speed controller·····0.04 (S)
- Cylinder stroke·····100 stroke

0.58 + 0.05 x 100/25 + 0.04 = 0.82 kg

Construction: CLKG□/CLKP□25

Retraction locking (B)

View A-A
Clevis width symbol: A

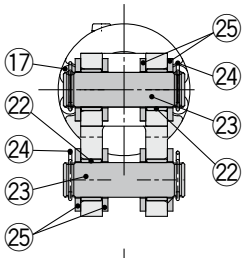

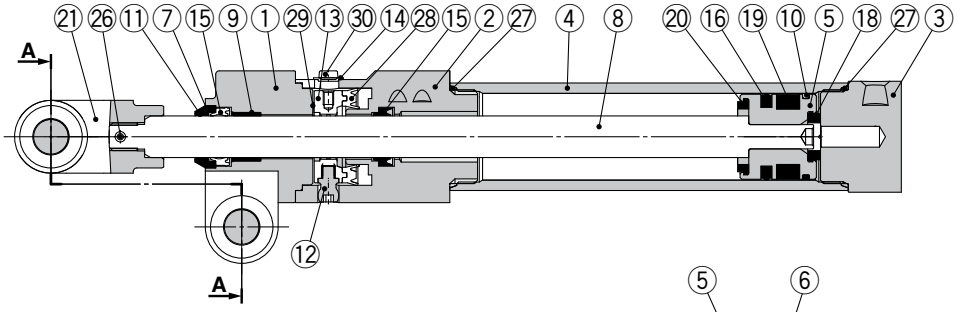

Clevis width symbol: B

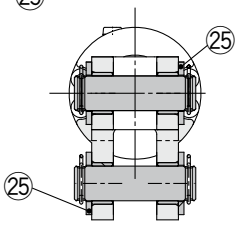

CLKP□25
Built-in strong magnet type

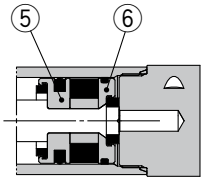

Extension locking (F)

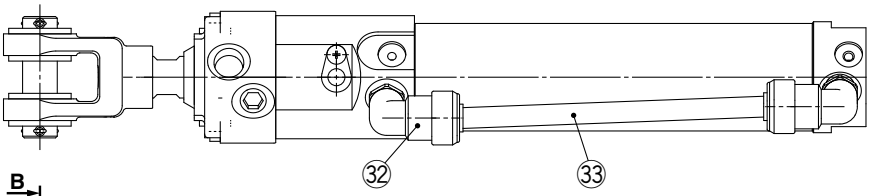

View B-B
Clevis width symbol: A

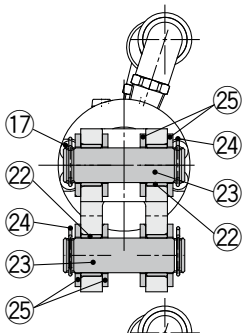

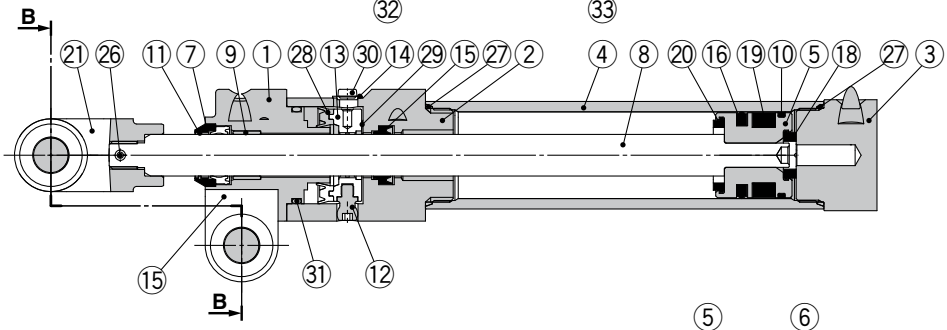

Clevis width symbol: B

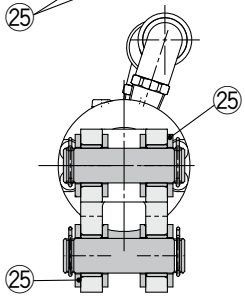

CLKP□25
With strong magnet type

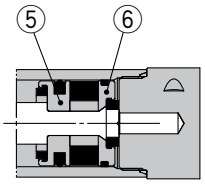

Component Parts

No.	Description	Material	Qty.	Note
1	**Rod cover**	Aluminum alloy	1	Trivalent chromated
2	**Lock body**	Aluminum alloy	1	Trivalent chromated
3	**Head cover**	Aluminum alloy	1	Hard anodized
4	**Cylinder tube**	Aluminum alloy	1	Hard anodized
5	**Piston**	Aluminum alloy	1	Trivalent chromated: CLKG□
	PistonA	Aluminum alloy		Trivalent chromated: CLKP□
6	**PistonB**	Aluminum alloy	1	Trivalent chromated: CLKP□
7	**Holder**	Brass	1	—
8	**Piston rod**	Stainless steel	1	Hard chrome plated
9	**Bushing**	Oil-impregnated sintered alloy	1	—
10	**Wear ring**	Resin	1	—
11	**Coil scraper**	Bronze	1	—
12	**Pivot**	Structural steel	1	Electroless nickel plated
13	**Lock ring**	Structural steel	1	Zinc trivalent chromated
14	**Dust cover**	Stainless steel	1	—
15	**Rod seal**	NBR	2	—
16	**Piston seal**	NBR	1	—

No.	Description	Material	Qty.	Note
17	**Hexagon socket head cap screw**	Structural steel	4	Nickel plated
18	**Bumper**	Urethane rubber	1	—
19	**Magnet**	—	1	—
20	**Bumper**	Urethane rubber	1	—
21	**Double knuckle joint**	Cast iron	1	Manganese phosphate coating
22	**Clevis bushing**	Resin	4	—
23	**Clevis pin/Knuckle pin**	Structural steel	2	—
24	**Cotter pin**	Steel wire	4	Zinc trivalent chromated
25	**Flat washer**	Steel strip	8	Nickel plated: Clevis width symbol A
			4	Nickel plated: Clevis width symbol B
26	**Spring pin**	Tool steel	1	—
27	**Tube gasket**	NBR	2	—
28	**Lock ring seal**	NBR	1	—
29	**Brake spring**	Steel wire	2	—
30	**Cross recessed round head screw**	Structural steel	1	Nickel plated
31	**O-ring**	NBR	1	—
32	**FR One-touch fitting**	—	2	Extension locking only
33	**FR double layer tube**	—	1	Extension locking only

Construction: CLKG□/CLKP□32, 40

Retraction locking (B)

View A-A

Clevis width symbol: B

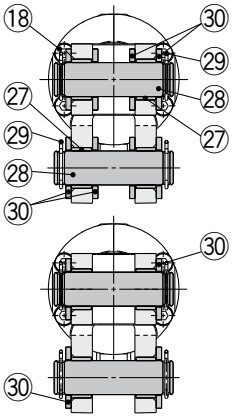

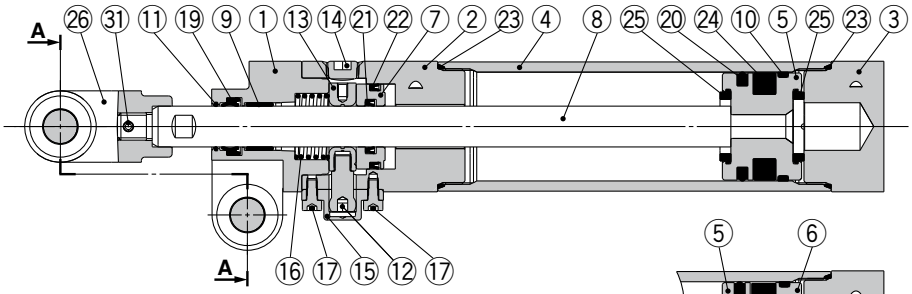

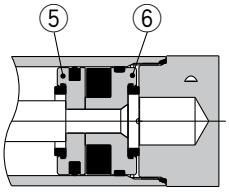

CLKP□32, 40
Built-in strong magnet type

Extension locking (F)

View A-A

Clevis width symbol: B

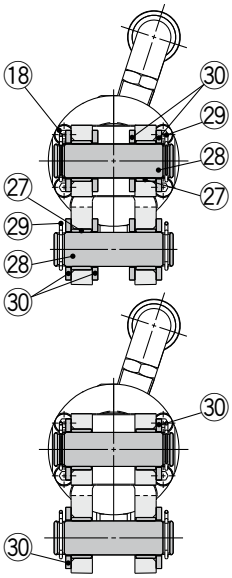

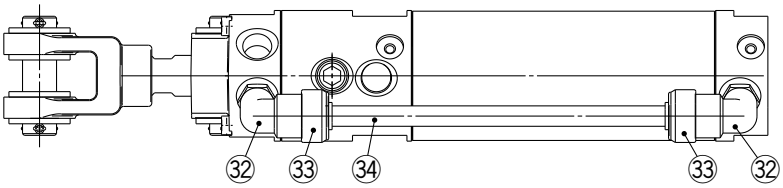

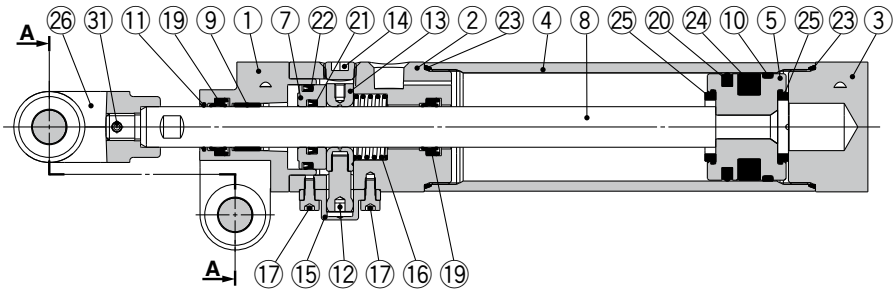

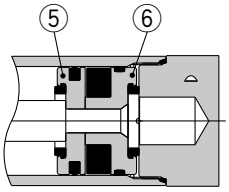

CLKP□32, 40
Built-in strong magnet type

Component Parts

No.	Description	Material	Qty.	Note
1	**Cover**	Aluminum alloy	1	Trivalent chromated
2	**Rod cover**	Aluminum alloy	1	Hard anodized
3	**Head cover**	Aluminum alloy	1	Hard anodized
4	**Cylinder tube**	Aluminum alloy	1	Hard anodized
5	**Piston**	Aluminum alloy	1	Trivalent chromated: CLKG□
	PistonA	Aluminum alloy		Trivalent chromated: CLKP□
6	**PistonB**	Aluminum alloy	1	Trivalent chromated: CLKP□
7	**Release piston**	Aluminum alloy	1	Trivalent chromated
8	**Piston rod**	Special purpose steel	1	Quenched Hard chrome plated
9	**Bushing**	Oil-impregnated sintered alloy	1	
10	**Wear ring**	Resin	1	
11	**Coil scraper**	Bronze	1	
12	**Pivot**	Structural steel	1	Electroless nickel plated
13	**Lock ring**	Structural steel	1	Zinc trivalent chromated
14	**Plug**	Structural steel	1	Nickel plated
15	**Protective cover**	Aluminum alloy	1	Hard anodized
16	**Brake spring**	Steel wire	1	Zinc trivalent chromated
17	**Hexagon socket head cap screw**	Structural steel	2	Nickel plated

No.	Description	Material	Qty.	Note
18	**Hexagon socket head cap screw**	Structual steel	4	Nickel plated
19	**Rod seal**	NBR	1	Retraction locking
			2	Extension locking
20	**Piston seal**	NBR	1	
21	**Release piston seal A**	NBR	1	
22	**Release piston seal B**	NBR	1	
23	**Tube gasket**	NBR	2	
24	**Magnet**	—	1	
25	**Bumper**	Urethane rubber	2	
26	**Double knuckle joint**	Cast iron	1	Manganese phosphate coating
27	**Clevis bushing**	Steel strip + PTFE	4	
28	**Clevis pin/Knuckle pin**	Structural steel	2	
29	**Cotter pin**	Steel wire	4	Zinc trivalent chromated
30	**Flat washer**	Steel strip	8	Nickel plated: Clevis width symbol A
			4	Nickel plated: Clevis width symbol B
31	**Spring pin**	Tool steel	1	
32	**FR One-touch fitting**	—	2	Extension locking only
33	**Spatter cover**	—	2	Extension locking only
34	**FR double layer tube**	—	1	Extension locking only

Dimensions

CLKG□/CLKP□25
Retraction locking (F)

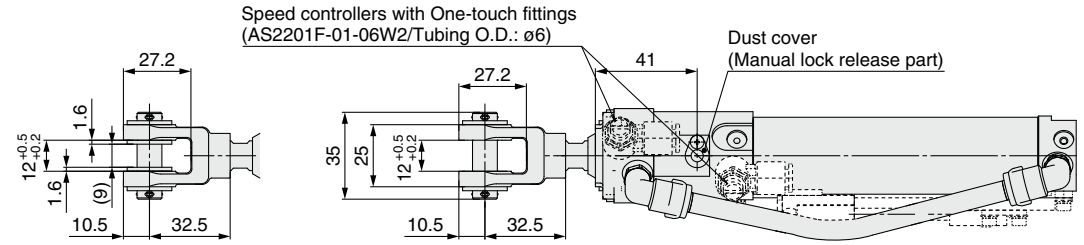

CLK□A25
(Clevis width symbol: A)

CLK□B25
(Clevis width symbol: B)

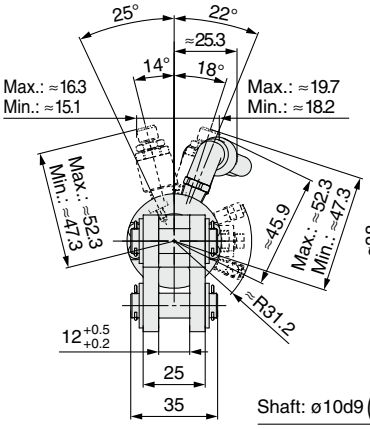

CLK□B25
(Clevis width symbol: B)

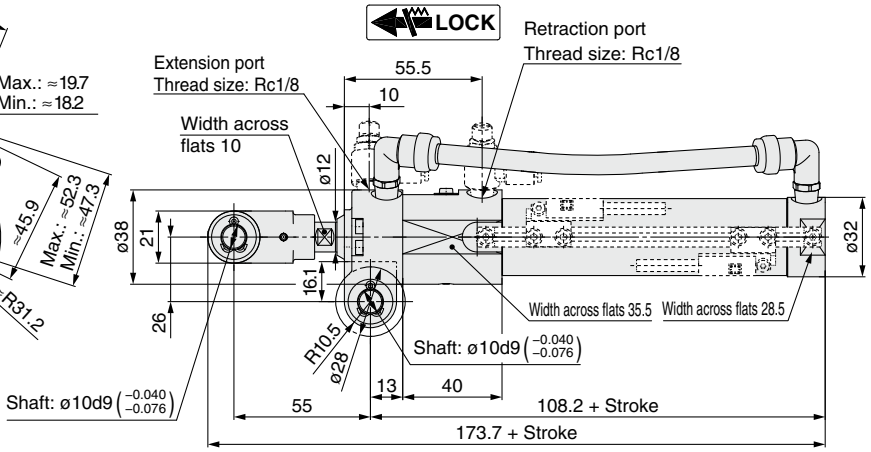

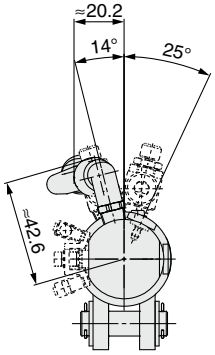

CLK□B25
(Clevis width symbol: B)

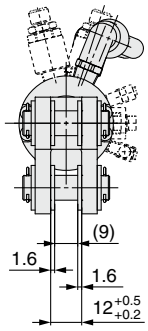

CLK□A25
(Clevis width symbol: A)

Pin (For Clevis/Double Knuckle Joint)

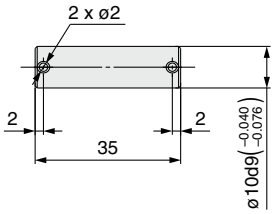

Part no.	Applicable cylinder
CKA-X2095-P02	Series CK□A25 to 40 Series CLK□A25 to 40
CKB-X2095-P02	Series CK□B25 to 40 Series CLK□B25 to 40

∗ Cotter pins and flat washers are provided as a standard.

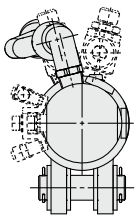

CLK□A25
(Clevis width symbol: A)

Dimensions

CLKG□/CLKP□32, 40
Retraction locking (B)

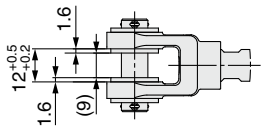

CLK□A32, 40
(Clevis width symbol: A)

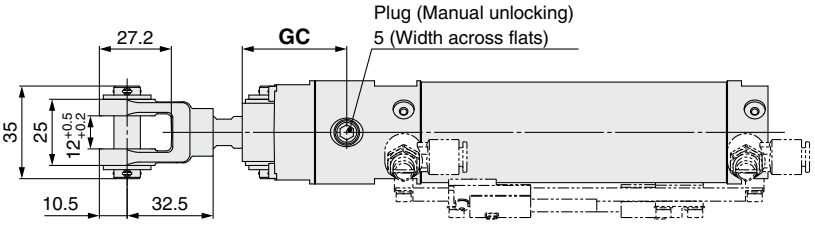

CLK□B32, 40
(Clevis width symbol: B)

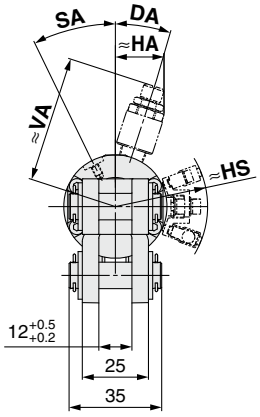

CLK□B32, 40
(Clevis width symbol: B)

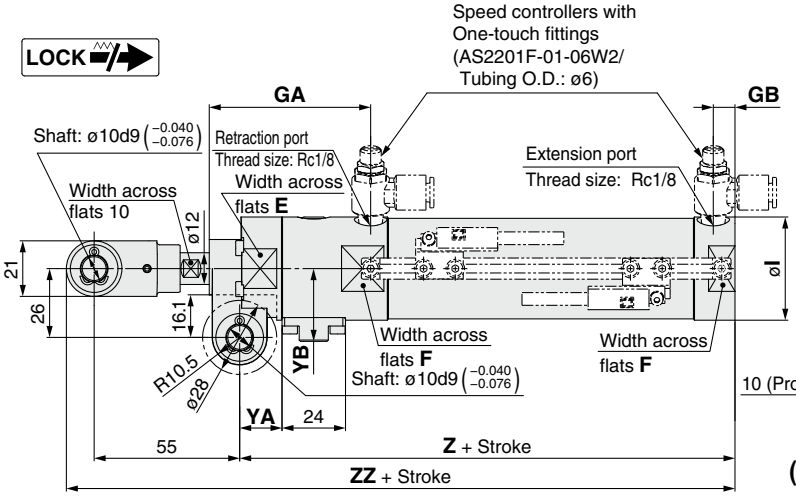

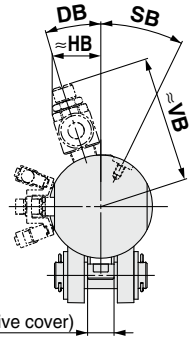

CLK□B32, 40
(Clevis width symbol: B)

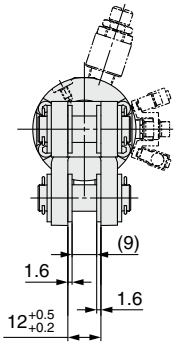

CLK□A32, 40
(Clevis width symbol: A)

Pin (For Clevis/Double Knuckle Joint)

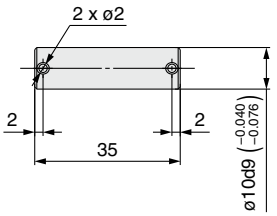

Part no.	Applicable cylinder
CKA-X2095-P02	Series CK□A25 to 40 Series CLK□A25 to 40
CKB-X2095-P02	Series CK□B25 to 40 Series CLK□B25 to 40

∗ Cotter pins and flat washers are provided as a standard.

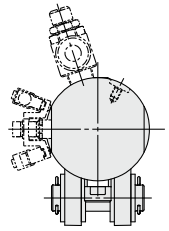

CLK□A32, 40
(Clevis width symbol: A)

(mm)

Symbol / Bore size	DA	DB	E	F	GA	GB	GC	HA		HB		HS	øI	SA	SB	VA		VB		YA	YB	Z	ZZ
								MAX.	MIN.	MAX.	MIN.					MAX.	MIN.	MAX.	MIN.				
32	18°	18°	36	35	61	8.2	39.5	19.5	18.3	19.5	18.3	35.7	39	27°	27°	52.8	47.8	52.8	47.8	16	27.5	112.2	177.7
40	21°	21°	44.5	43.5	58.5	11	44.5	24	22.2	24	22.2	39.6	48	22°	22°	57.3	52.3	57.3	52.3	21	29	116.7	182.2

Dimensions

CLKG□/CLKP□25
Extension locking (B)

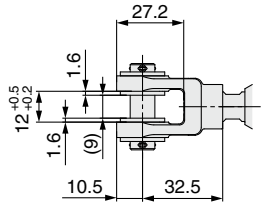

CLK□A25
(Clevis width symbol: A)

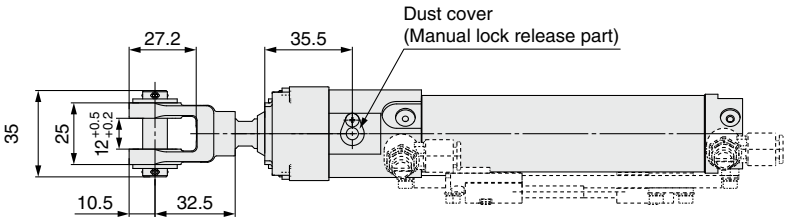

CLK□B25
(Clevis width symbol: B)

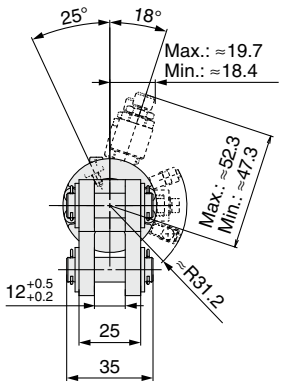

CLK□B25
(Clevis width symbol: B)

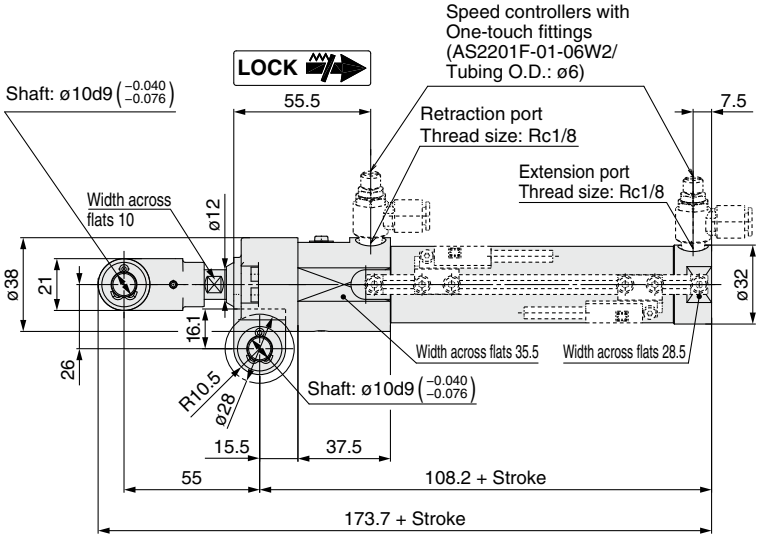

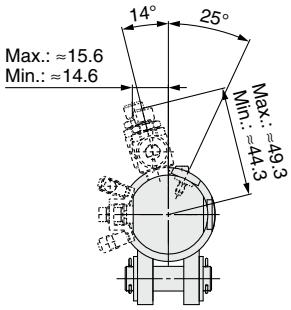

CLK□B25
(Clevis width symbol: B)

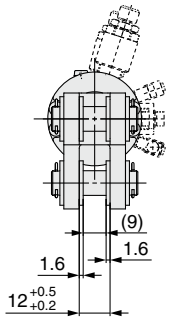

CLK□A25
(Clevis width symbol: A)

Pin (For Clevis/Double Knuckle Joint)

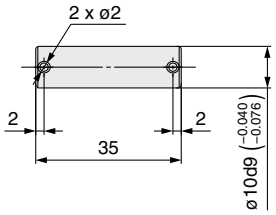

Part no.	Applicable cylinder
CKA-X2095-P02	Series CK□A25 to 40 Series CLK□A25 to 40
CKB-X2095-P02	Series CK□B25 to 40 Series CLK□B25 to 40

∗ Cotter pins and flat washers are provided as a standard.

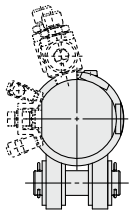

CLK□A25
(Clevis width symbol: A)

Dimensions

CLKG□/CLKP□32
Extension locking (F)

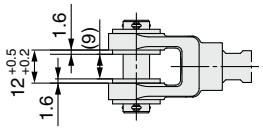

CLK□A32
(Clevis width symbol: A)

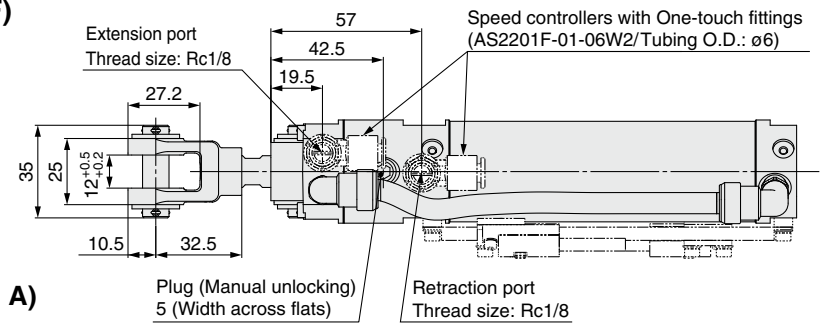

CLK□B32
(Clevis width symbol: B)

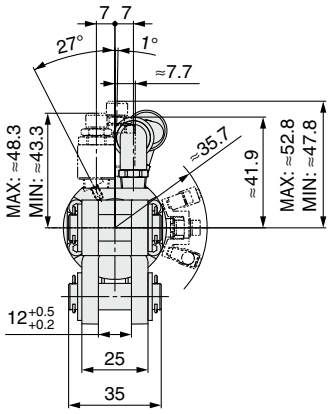

CLK□B32
(Clevis width symbol: B)

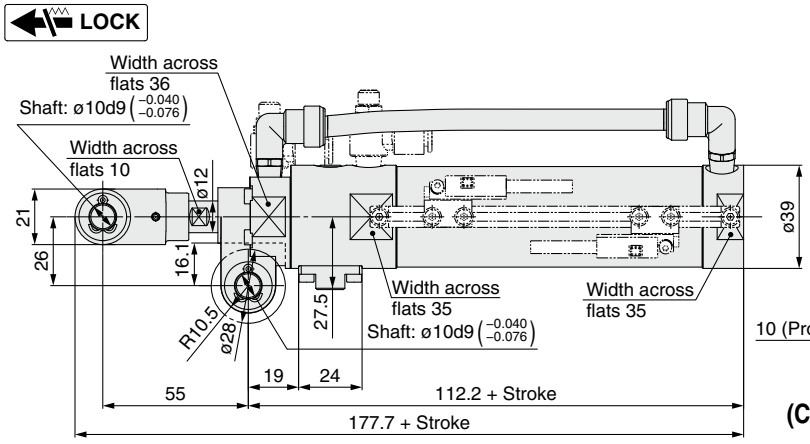

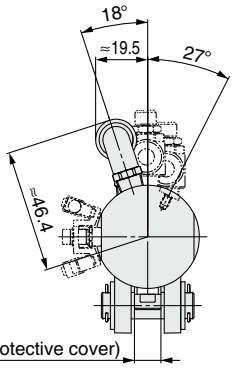

CLK□B32
(Clevis width symbol: B)

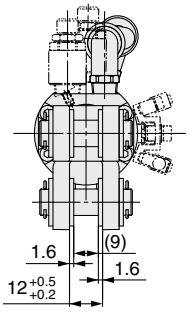

CLK□A32
(Clevis width symbol: A)

Pin (For Clevis/Double Knuckle Joint)

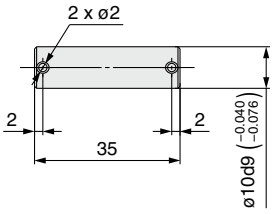

Part no.	Applicable cylinder
CKA-X2095-P02	Series CK□A25 to 40 Series CLK□A25 to 40
CKB-X2095-P02	Series CK□B25 to 40 Series CLK□B25 to 40

∗ Cotter pins and flat washers are provided as a standard.

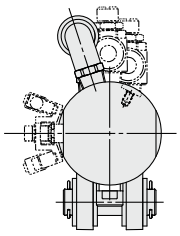

CLK□A32
(Clevis width symbol: A)

Dimensions

CLKG□/CLKP□40
Extension locking (F)

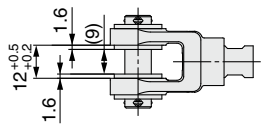

CLK□A40
(Clevis width symbol: A)

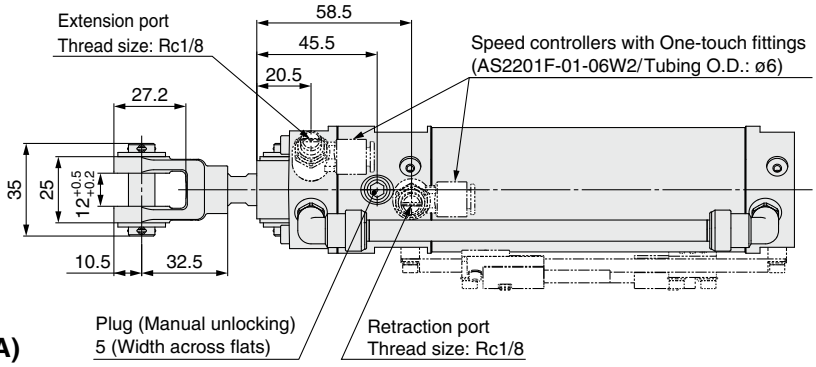

CLK□B40
(Clevis width symbol: B)

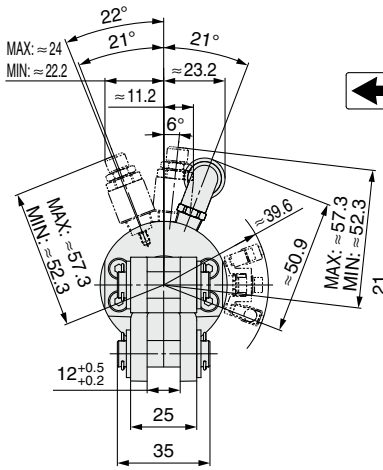

CLK□B40
(Clevis width symbol: B)

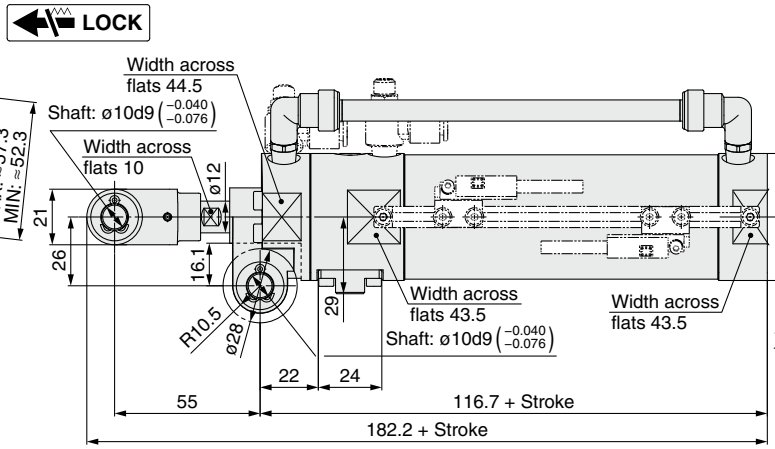

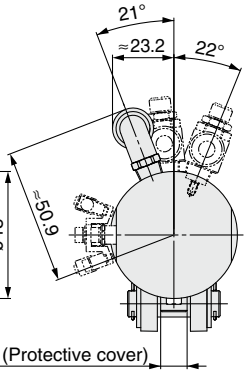

CLK□B40
(Clevis width symbol: B)

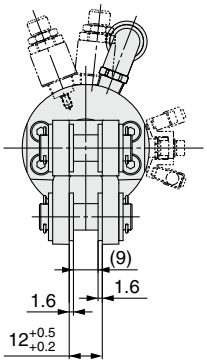

CLK□A40
(Clevis width symbol: A)

Pin (For Clevis/Double Knuckle Joint)

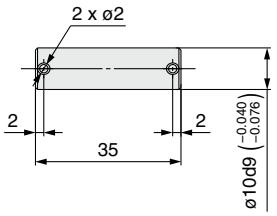

Part no.	Applicable cylinder
CKA-X2095-P02	Series CK□A25 to 40 Series CLK□A25 to 40
CKB-X2095-P02	Series CK□B25 to 40 Series CLK□B25 to 40

∗ Cotter pins and flat washers are provided as a standard.

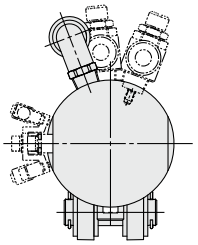

CLK□A40
(Clevis width symbol: A)

Auto Switch Proper Mounting Position (Detection at Stroke End) and Its Mounting Height

D-P3DW□□

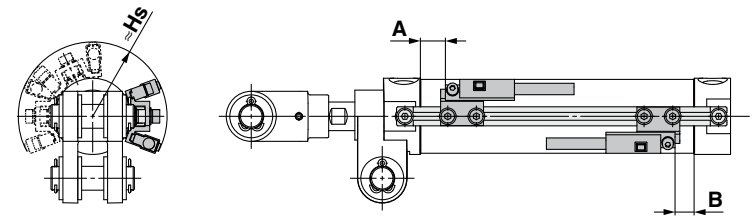

D-P4DW□□

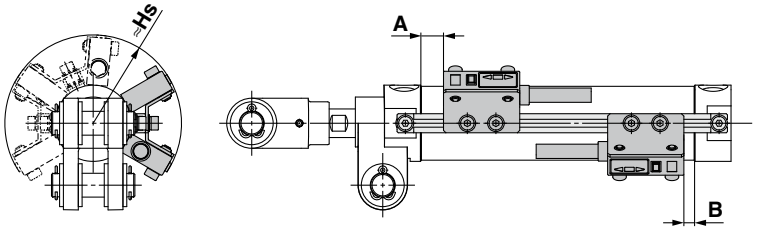

D-P79W

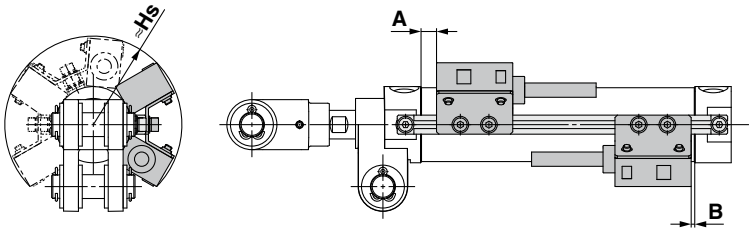

D-P7□□□□

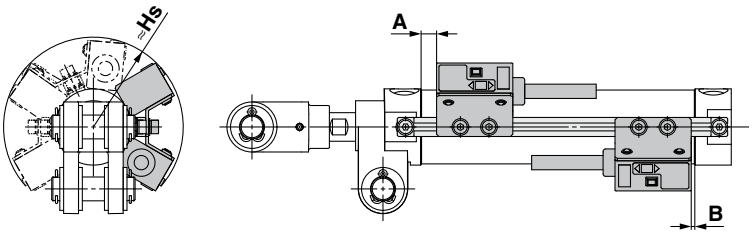

Auto Switch Mounting Position and Its Height Unit: mm

Applicable auto switch	Symbol	Auto switch set value and its height		
		ø25	ø32	ø40
D-P3DW□□	A	10.5	10.5	11.5
	B	8	9	11
	Hs	31.2	35.7	39.6
D-P4DW□□	A	8	8	9
	B	5.5	6.5	8.5
	Hs	37.1	40.7	45.4
D-P79W	A	6	5	6
	B	2	4	5.5
	Hs	37.7	40.8	45.1
D-P7□□□□	A	6	5	6
	B	2	4	5.5
	Hs	37.3	40.2	45.1

Note 1) The mounting position should be referred for reference only for the auto switch mounting position at the stroke end detection. Adjust the auto switch after confirming the operation to set actually.
Note 2) A/B dimensions are the distance from the standard position (above drawing) to the end surface of the auto switch.
Note 3) The auto switch mounting position is temporarily set at the time of shipping from our factory. Change it to the desired position in accordance to your facility.

Minimum Stroke for Auto Switch Mounting

Unit: mm

Applicable auto switch	1 pc.	2 pcs.
D-P3DW□□	50	50
D-P4DW□□	50	50
D-P7□□□□	50	50

Operating Range

Unit: mm

Applicable auto switch	Bore size		
	ø25	ø32	ø40
D-P3DW□□	7	6	6.5
D-P4DW□□	5	5	5
D-P7□□□□	8	7.5	8.5

Other than the applicable auto switches listed in "How to Order," the following auto switches are mountable.
∗For magnetic field resistant 2-color indication solid state auto switches, auto switches with pre-wired connector (D-P4DW□DPC type) are also available.

Please order the auto switch and mounting brackets detailed below separately from the cylinder.

Auto switch part no.	Auto switch mounting bracket part no.	
	ø25	ø32, ø40
D-M9□/D-M9□V D-M9□W/D-M9□WV	Note 2) ①BQ-1 ②BQ2-012	
D-A9□/D-A9□V	—	Note 2) ①BQ-1 ②BQ2-012

Note 1) Only suitable for CKG□ types.
Note 2) Two types of auto switch mounting brackets are used as a set. The screws (M2.5 x 4 L) built into the auto switch are not used.
Note 3) ø25 is available through a special order of D-A9□/D-A9□V.

How to Mount and Move the Auto Switch

■D-P3DW□□

① Fix the auto switch and the auto switch mounting bracket D temporarily by tightening the attached hexagon socket head cap screw (M2.5 x 9.5 L) 1 to 2 turns.
② Fix the auto switch mounting bracket D and auto switch mounting bracket B temporarily by tightening the hexagon socket head cap screw (M3 x 6 L) to auto switch mounting bracket B 1 to 2 turns.
③ Insert the temporarily tightened auto switch mounting bracket B into the mating groove of the auto switch rail, and slide the auto switch onto the auto switch rail through the groove.
④ Check the detecting position of the auto switch and fix the auto switch firmly with the hexagon socket head cap screw (M2.5 x 9.5 L, M3 x 6 L).
(The tightening torque for M2.5 is 0.2 to 0.3 N·m, M3 is 0.5 to 0.8 N·m).
⑤ If the detecting position is changed, go back to step ③.

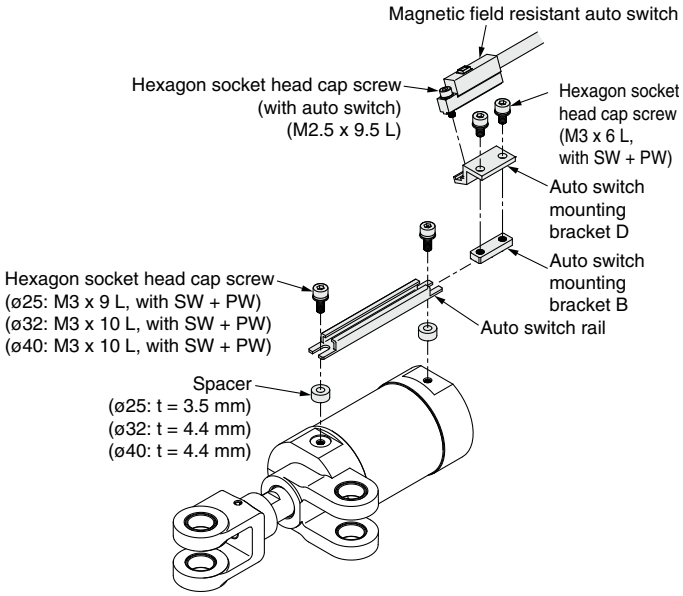

Applicable auto switch: D-P3DW, D-P3DWSC, D-P3DWSE

Bore size	Auto switch mounting bracket part no.	Contents	Qty.
ø25 ø32 ø40	BK3-025S	Auto switch mounting bracket D	1
		Auto switch mounting bracket B	1
		Hexagon socket head cap screw (M3 x 6 L, with SW + PW)	2

■D-P4DW□□

① Attach the auto switch to the auto switch mounting bracket C, using a hexagon socket head cap screw (M3 x 12 L).
(The tightening torque is 0.5 to 0.8 N·m.)
② Fix the auto switch mounting bracket B and the auto switch mounting bracket C temporarily by tightening the hexagon socket head cap screw (M3 x 6 L).
③ Insert the temporarily tightened auto switch mounting bracket B into the mating groove of the auto switch rail, and slide the auto switch onto the auto switch rail through the groove.
④ Check the detecting position of the auto switch and fix the auto switch firmly with the hexagon socket head cap screw (M3 x 6 L, M3 x 12 L).
(The tightening torque is 0.5 to 0.8 N·m.)
⑤ If the detecting position is changed, go back to step ③.

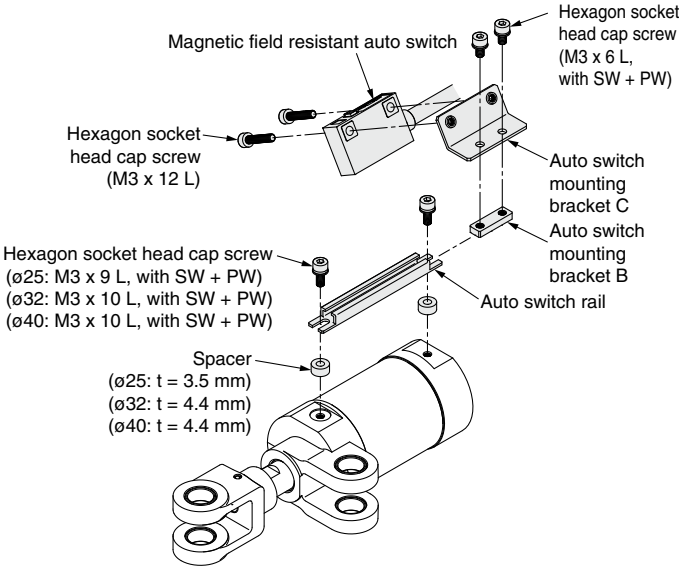

Applicable auto switch: D-P4DWL/Z, D-P4DWSC, D-P4DWSE

Bore size	Auto switch mounting bracket part no.	Contents	Qty.
ø25 ø32 ø40	BK4-025	Auto switch mounting bracket B	1
		Auto switch mounting bracket C	1
		Hexagon socket head cap screw (M3 x 6 L, with SW + PW)	2
		Hexagon socket head cap screw (M3 x 12 L)	2

■D-P7□, D-P79WSE

① Attach the auto switch to the auto switch mounting bracket C, using a hexagon socket head cap screw (M3 x 15 L).
(The tightening torque is 0.5 to 0.8 N·m.)
② Fix the auto switch mounting bracket B and the auto switch mounting bracket C temporarily by tightening the hexagon socket head cap screw (M3 x 6 L).
③ Insert the temporarily tightened auto switch mounting bracket B into the mating groove of the auto switch rail, and slide the auto switch onto the auto switch rail through the groove.
④ Check the detecting position of the auto switch and fix the auto switch firmly with the hexagon socket head cap screw (M3 x 6 L, M3 x 15 L).
(The tightening torque is 0.5 to 0.8 N·m.)
⑤ If the detecting position is changed, go back to step ③.
*Be aware that D-P79WSE should be installed in the specified direction shown when installed to the auto switch mounting bracket C. Be sure to mount it so that the soft resin mold surface is in contact with the auto switch mounting bracket C.

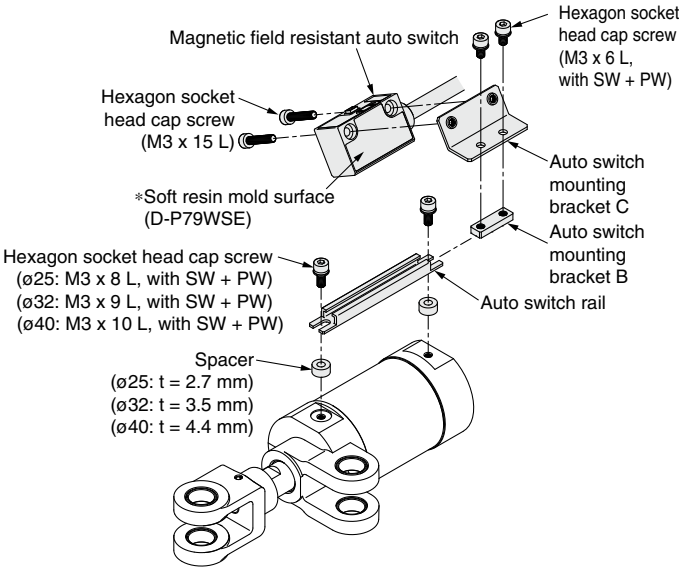

Applicable auto switch: D-P74, D-P74-376, D-P74GSC, D-P79WSE

Bore size	Auto switch mounting bracket part no.	Contents	Qty.
ø25 ø32 ø40	BK2-025	Auto switch mounting bracket B	1
		Auto switch mounting bracket C	1
		Hexagon socket head cap screw (M3 x 6 L, with SW + PW)	2
		Hexagon socket head cap screw (M3 x 15 L)	2

Auto Switch Rail Assembly Part No.

Applicable cylinder series	Bore size	Applicable stroke	Auto switch rail assembly part no.
CKG CLKG	ø25	50	CKG25-X2095-R050
		75	CKG25-X2095-R075
		100	CKG25-X2095-R100
		125	CKG25-X2095-R125
		150	CKG25-X2095-R150
	ø32	50	CKG32-X2095-R050
		75	CKG32-X2095-R075
		100	CKG32-X2095-R100
		125	CKG32-X2095-R125
		150	CKG32-X2095-R150
CKG CKP CLKG CLKP	ø40	50	CKG40-X2095-R050
		75	CKG40-X2095-R075
		100	CKG40-X2095-R100
		125	CKG40-X2095-R125
		150	CKG40-X2095-R150

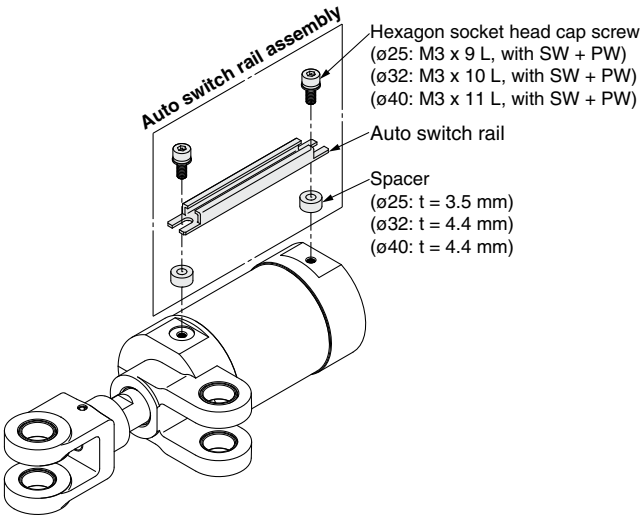

Applicable cylinder series	Bore size	Applicable stroke	Auto switch rail assembly part no.
CKP CLKP	ø25	50	CKP25-X2095-R050
		75	CKP25-X2095-R075
		100	CKP25-X2095-R100
		125	CKP25-X2095-R125
		150	CKP25-X2095-R150
	ø32	50	CKP32-X2095-R050
		75	CKP32-X2095-R075
		100	CKP32-X2095-R100
		125	CKP32-X2095-R125
		150	CKP32-X2095-R150

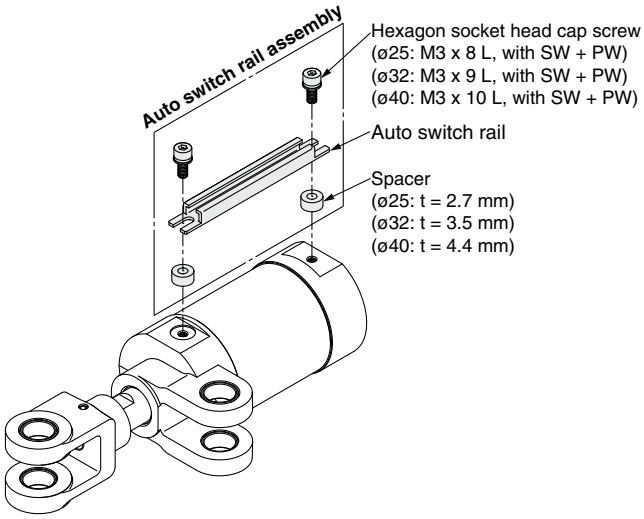

Made to Order Specifications

Please contact SMC for detailed dimensions, specifications and lead times.

Made to Order

Unlock-port Separate Piping Type

Built-in standard magnet type with AC magnetic field resistant auto switch

CLKG B 32 – 50 Y S – B – P3DWSC □ – X1604

Built-in strong magnet type with magnetic field resistant auto switch

CLKP B 32 – 50 Y S – B – P79WSE □ – X1604

Clevis width

A	9 mm
B	12.5 mm

∗ Clevis width symbol
For A: Clevis width B (12.5 mm) plus two 1.6 mm washers, making the clevis width 9 mm.
Accessories in the form of pins/flat washers (4 pcs.)/cotter pins (2 pcs.) are included (but not assembled).
For B: Accessories in the form of pins/flat washers (2 pcs.)/cotter pins (2 pcs.) are included (but not assembled).

Bore size

25	25 mm
32	32 mm
40	40 mm

Cylinder stroke

Bore size	Standard stroke
ø25 to ø40	50, 75, 100, 125, 150

End bracket

Y	Double knuckle joint

∗ Clevis width symbol
For A: Clevis width B (12.5 mm) plus two 1.6 mm washers, making the clevis width 9 mm.
Accessories in the form of pins/flat washers (4 pcs.)/cotter pins (2 pcs.) are included (but not assembled).
For B: Accessories in the form of pins/flat washers (2 pcs.)/cotter pins (2 pcs.) are included (but not assembled).

Option

Nil	None
S	With speed controller

∗ Speed controllers (2 pcs.) are shipped together (but not assembled).

Locking direction

B	Retraction locking
F	Extension locking

Number of auto switches

Nil	2 pcs.
S	1 pc.
n	"n" pcs. (n = 3, 4, 5···n)

Unlock-port Separate Piping Type

Auto switch

For applicable auto switch model, refer to the Table 1.

Nil	Without auto switch (built-in magnet) Without switch mounting rail
P	Without auto switch (built-in magnet) With switch mounting rail

∗ Auto switch rails are shipped assembled.
∗ Auto switches are shipped together (but not assembled).
∗ Auto switch rails are shipped with mounting locations attached on the right side, as you look from the rod end.

Built-in Standard (Strong) Magnet Cylinder Part No.

1) Built-in standard (strong) magnet type without auto switch and switch mounting rail
Symbol for the auto switch type is "Nil" as shown below.
CLKG: (Example) CLKGA32-50Y-B-X1604
CLKP: (Example) CLKPA32-50Y-B-X1604

2) Built-in standard (strong) magnet type without auto switch, with switch mounting rail
Symbol for the auto switch type is "P" as shown below.
CLKG: (Example) CLKGA32-50Y-B-P-X1604
CLKP: (Example) CLKPA32-50Y-B-P-X1604

Table 1

Applicable Magnetic Field Resistant Auto Switches/Refer to pages 1719 to 1827 in Best Pneumatics No. 3 and the catalog CAT.ES20-201 for detailed auto switch specifications.

Applicable cylinder series	Type	Auto switch model	Applicable magnetic field	Electrical entry	Indicator light	Wiring (Pin no. in use)	Load voltage	Lead wire length	Applicable load
Series CLKG	Solid state auto switch	P3DWSC	AC magnetic field (Single-phase AC welding magnetic field)	Pre-wired connector	2-color indication	2-wire (3–4)	24 VDC	0.3 m	Relay, PLC Note 1)
		P3DWSE				2-wire (1–4)			
		P3DW		Grommet		2-wire		0.5 m	
		P3DWL						3 m	
		P3DWZ						5 m	
		P4DWSC		Pre-wired connector		2-wire (3–4)		0.3 m	
		P4DWSE				2-wire (1–4)			
		P4DWL		Grommet		2-wire		3 m	
		P4DWZ						5 m	
Series CLKP	Reed auto switch	P79WSE	DC/AC magnetic field	Pre-wired connector	2-color indication	2-wire (1–4)	24 VDC	0.3 m	
		P74-376			1-color indication	2-wire (3–4)		0.5 m	
		P74GSC						0.3 m	
		P74L		Grommet		2-wire	24 VDC 100 VAC	3 m	
		P74Z						5 m	

Note 1) PLC: Programmable Logic Controller
Note 2) There are other applicable auto switches other than the listed above. For details, refer to page 15.
Note 3) Refer to page 16 and 17 when ordering the auto switch mounting bracket assembly or switch mounting rail assembly.

Symbol
-X1604

Dimensions

CLKG□/CLKP□25
Retraction locking (B)

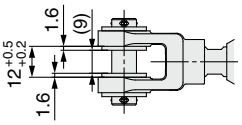

CLK□A25
(Clevis width symbol: A)

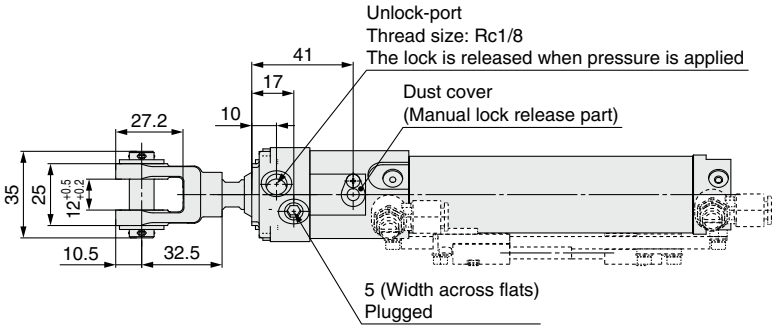

CLK□B25
(Clevis width symbol: B)

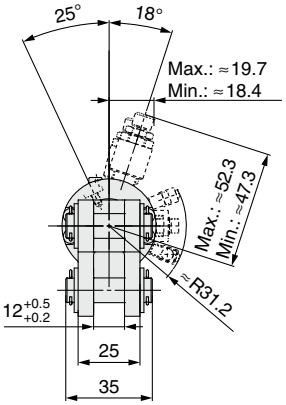

CLK□B25
(Clevis width symbol: B)

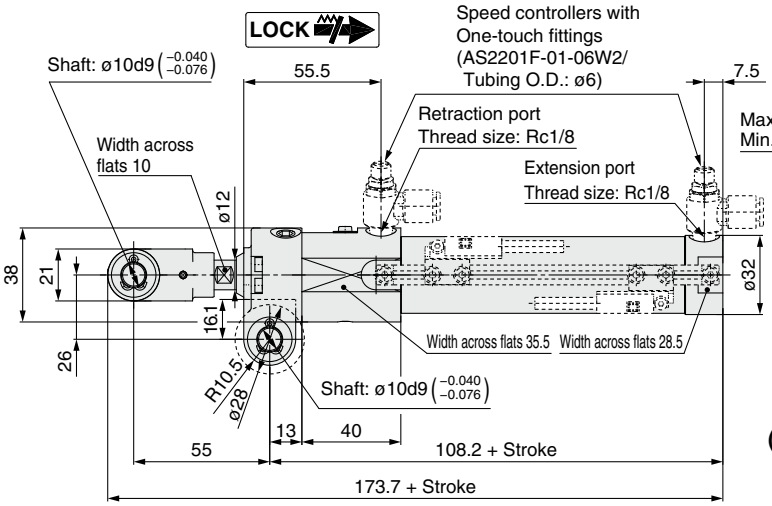

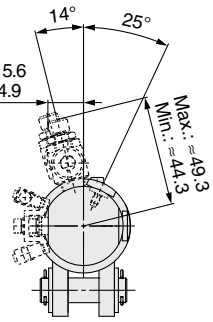

CLK□B25
(Clevis width symbol: B)

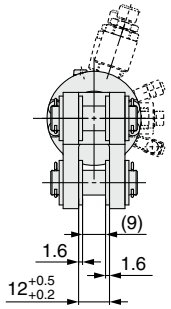

CLK□A25
(Clevis width symbol: A)

Pin (For Clevis/Double Knuckle Joint)

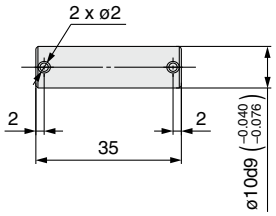

Part no.	Applicable cylinder
CKA-X2095-P02	Series CK□A25 to 40 Series CLK□A25 to 40
CKB-X2095-P02	Series CK□B25 to 40 Series CLK□B25 to 40

∗ Cotter pins and flat washers are provided as a standard.

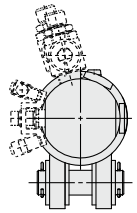

CLK□A25
(Clevis width symbol: A)

Made to Order Specifications

Please contact SMC for detailed dimensions, specifications and lead times.

Made to Order

Unlock-port Separate Piping Type

Dimensions

CLKG□/CLKP□32, 40
Retraction locking (B)

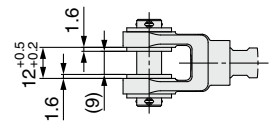

CLK□A32, 40
(Clevis width symbol: A)

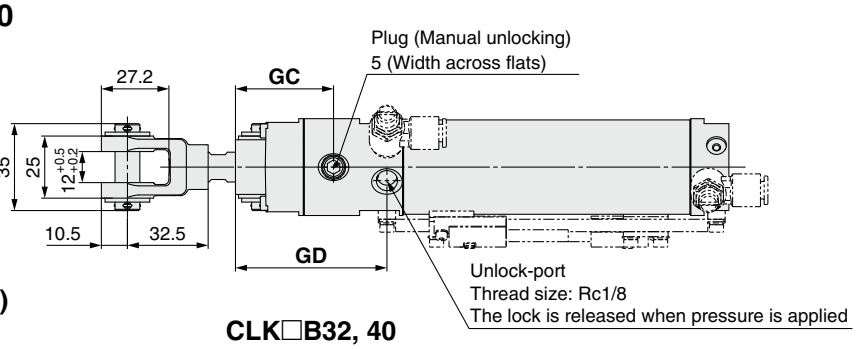

CLK□B32, 40
(Clevis width symbol: B)

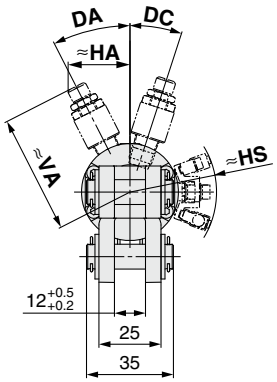

CLK□B32, 40
(Clevis width symbol: B)

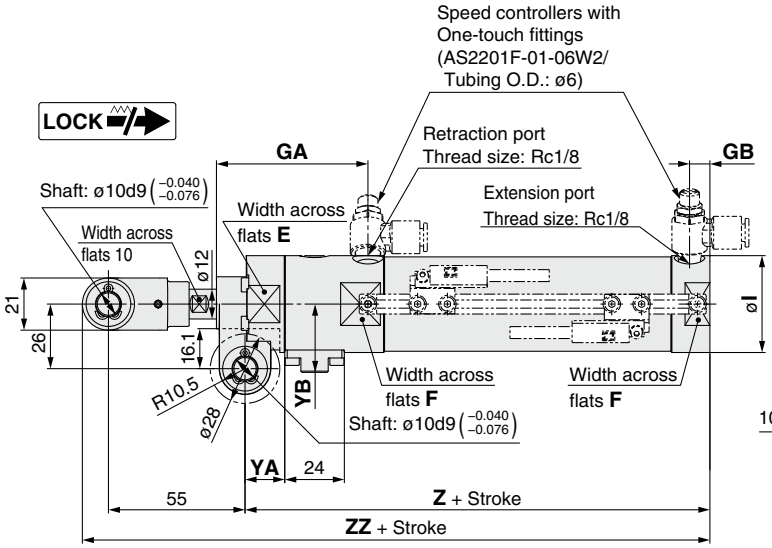

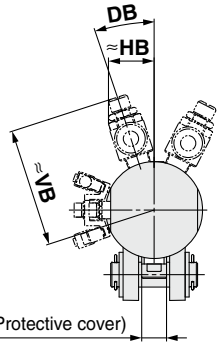

CLK□B32, 40
(Clevis width symbol: B)

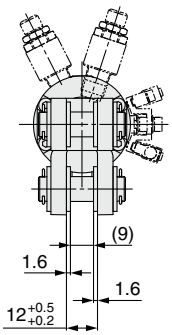

CLK□A32, 40
(Clevis width symbol: A)

Pin (For Clevis/Double Knuckle Joint)

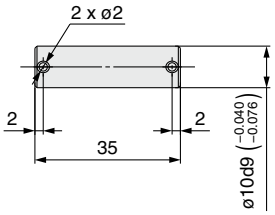

Part no.	Applicable cylinder
CKA-X2095-P02	Series CK□A25 to 40 Series CLK□A25 to 40
CKB-X2095-P02	Series CK□B25 to 40 Series CLK□B25 to 40

∗ Cotter pins and flat washers are provided as a standard.

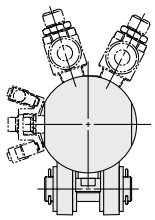

CLK□A32, 40
(Clevis width symbol: A)

(mm)

Symbol / Bore size	DA	DB	DC	E	F	GA	GB	GC	GD	HA		HB		HS	øI	VA		VB		YA	YB	Z	ZZ
										MAX.	MIN.	MAX.	MIN.			MAX.	MIN.	MAX.	MIN.				
32	27°	18°	18°	36	35	61	8.2	39.5	61	27.2	24.9	19.5	18.3	35.7	39	52.8	47.8	52.8	47.8	16	27.5	112.2	177.7
40	22°	21°	21°	44.5	43.5	58	11	44.5	58.5	24.9	23	24	22.2	39.6	48	57.3	52.3	57.3	52.3	21	29	116.7	182.2

Symbol
-X1604

Dimensions

CLKG□/CLKP□25
Extension locking (F)

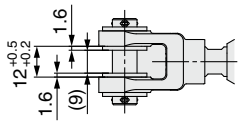

CLK□A25
(Clevis width symbol: A)

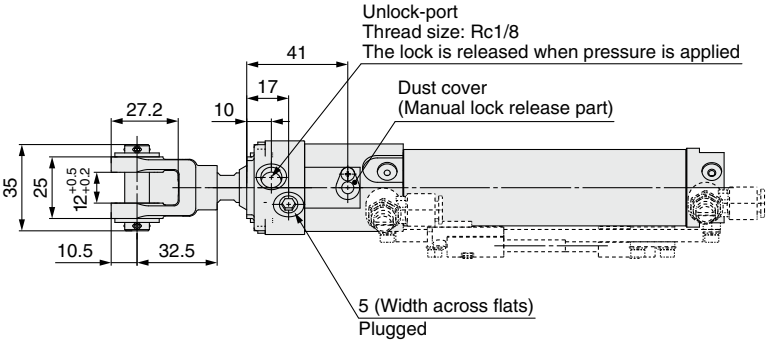

CLK□B25, 32, 40
(Clevis width symbol: B)

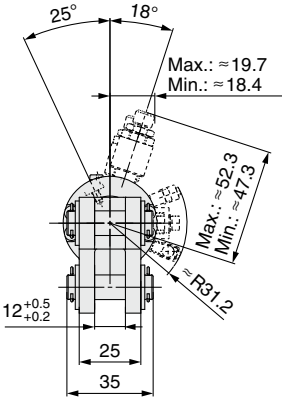

CLK□B25
(Clevis width symbol: B)

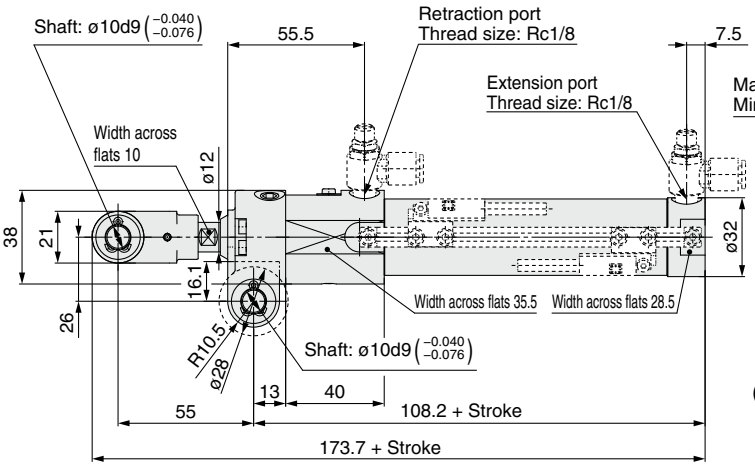

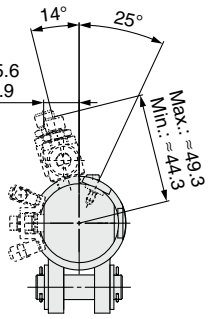

CLK□B25
(Clevis width symbol: B)

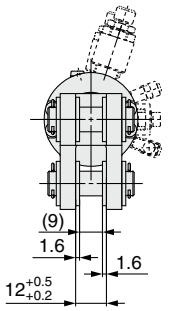

CLK□A25
(Clevis width symbol: A)

Pin (For Clevis/Double Knuckle Joint)

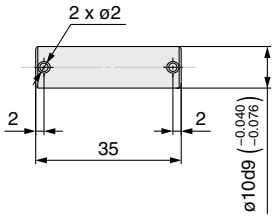

Part no.	Applicable cylinder
CKA-X2095-P02	Series CK□A25 to 40 Series CLK□A25 to 40
CKB-X2095-P02	Series CK□B25 to 40 Series CLK□B25 to 40

∗ Cotter pins and flat washers are provided as a standard.

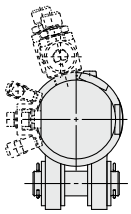

CLK□A25
(Clevis width symbol: A)

Made to Order Specifications

Please contact SMC for detailed dimensions, specifications and lead times.

Made to Order

Unlock-port Separate Piping Type

Dimensions

CLKG□/CLKP□32
Extension locking (F)

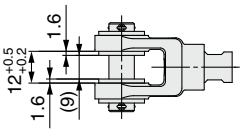

CLK□A32
(Clevis width symbol: A)

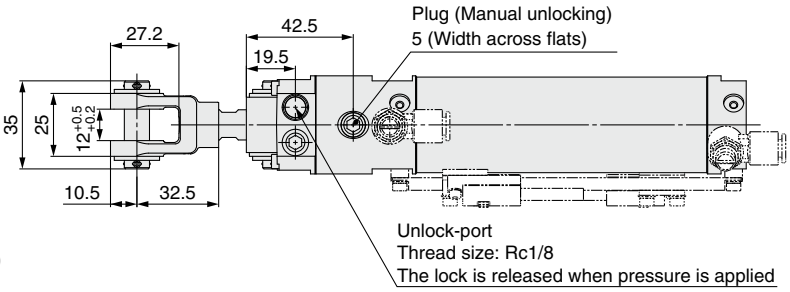

CLK□B32
(Clevis width symbol: B)

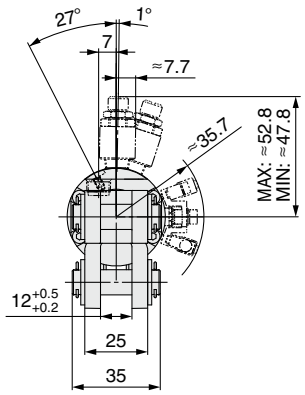

CLK□B32
(Clevis width symbol: B)

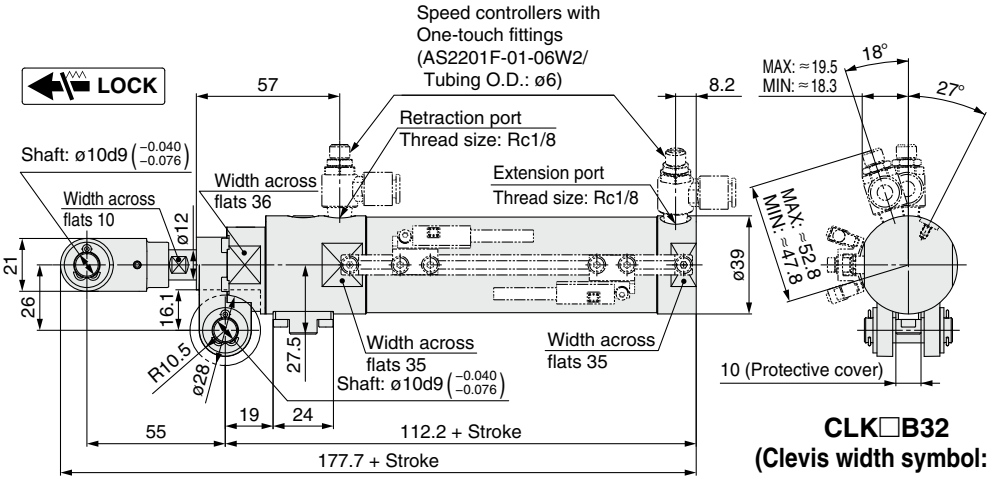

CLK□B32
(Clevis width symbol: B)

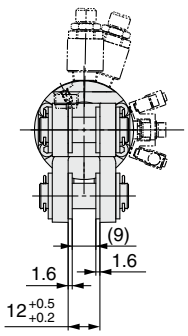

CLK□32
(Clevis width symbol: A)

Pin (For Clevis/Double Knuckle Joint)

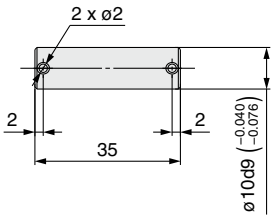

Part no.	Applicable cylinder
CKA-X2095-P02	Series CK□A25 to 40 Series CLK□A25 to 40
CKB-X2095-P02	Series CK□B25 to 40 Series CLK□B25 to 40

∗ Cotter pins and flat washers are provided as a standard.

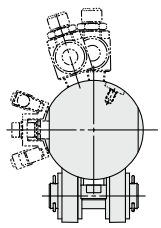

CLK□A32
(Clevis width symbol: A)

Symbol
-X1604

Dimensions

CLKG□/CLKP□40
Extension locking (F)

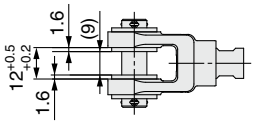

CLK□A40
(Clevis width symbol: A)

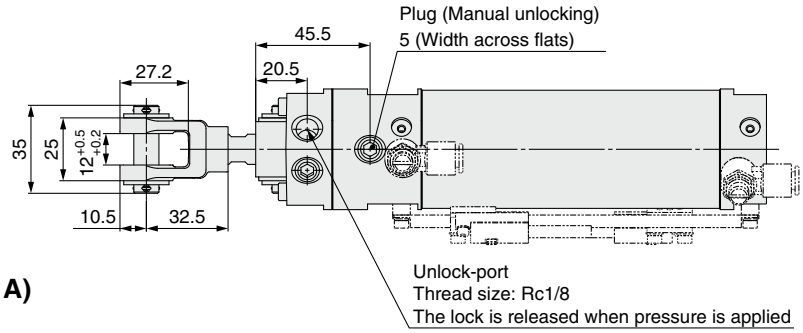

CLK□B40
(Clevis width symbol: B)

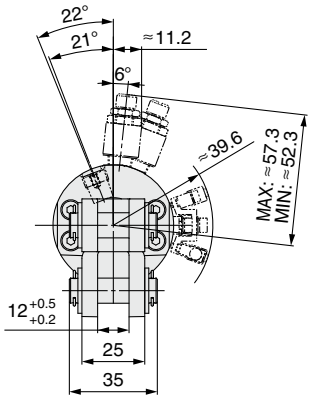

CLK□B40
(Clevis width symbol: B)

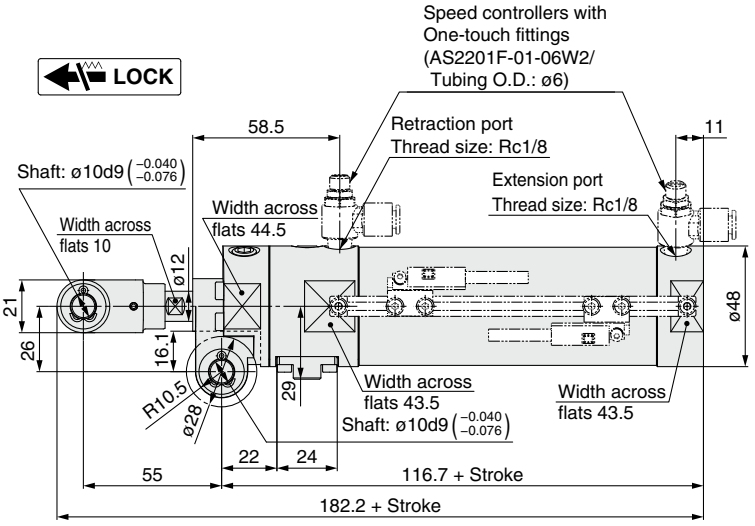

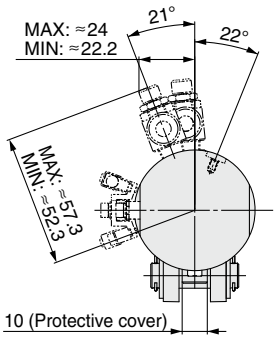

CLK□B40
(Clevis width symbol: B)

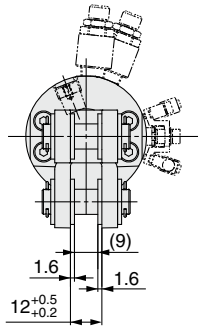

CLK□40
(Clevis width symbol: A)

Pin (For Clevis/Double Knuckle Joint)

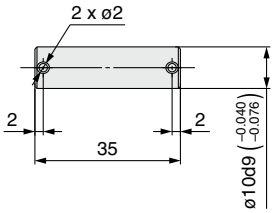

Part no.	Applicable cylinder
CKA-X2095-P02	Series CK□A25 to 40 Series CLK□A25 to 40
CKB-X2095-P02	Series CK□B25 to 40 Series CLK□B25 to 40

∗ Cotter pins and flat washers are provided as a standard.

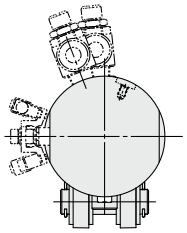

CLK□A40
(Clevis width symbol: A)