e-Rodless Actuator

Series E-MY2C/H/HT

Having both the operationability of an air cylinder and the speed controllability of an electric actuator

New

Actuator concept

e-Actuator

Operationability similar to an air cylinder

Impact free shifting of the slider between 2 optionally selected points

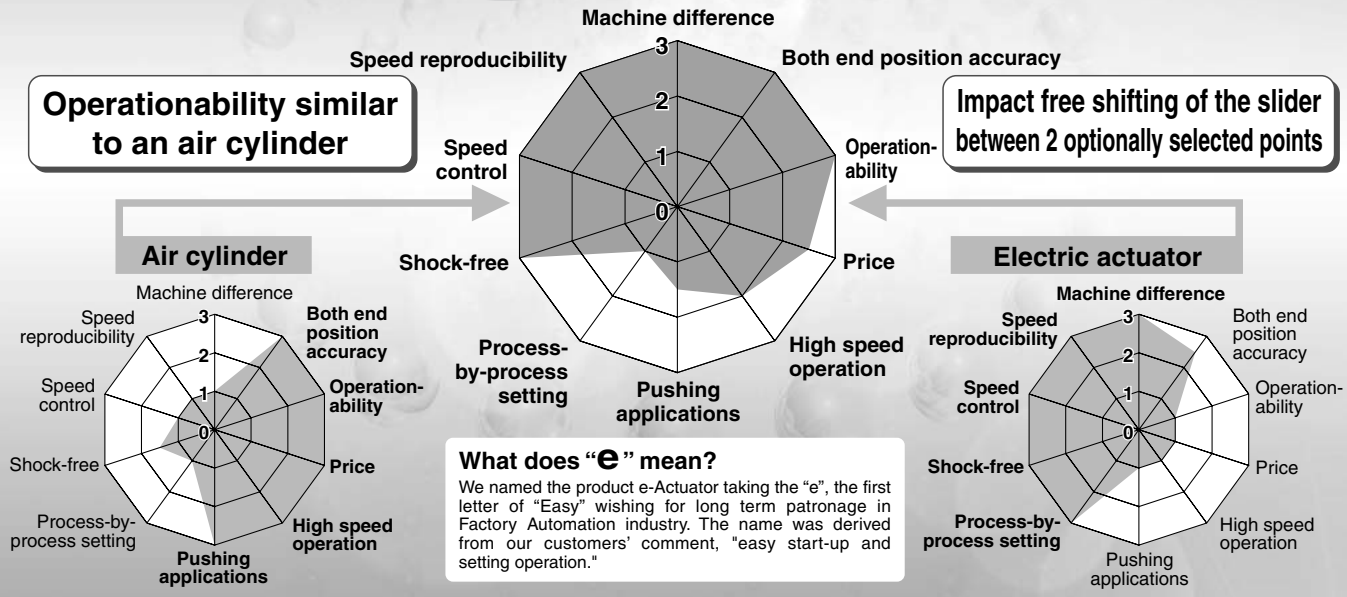

What does "e" mean?

We named the product e-Actuator taking the "e", the first letter of "Easy" wishing for long term patronage in Factory Automation industry. The name was derived from our customers' comment, "easy start-up and setting operation."

Cam follower guide type

Series E-MY2C

P.1125

Linear guide double axis type

Series E-MY2HT

P.1131

Linear guide single axis type

Series E-MY2H

P.1131

1 2 3 Realizing electric controllability similar to that of an air cylinder by 3 step operation

1 Stroke adjustment

❶ Movable stroke adjusting unit
❷ Small incremental adjustments can be made by using an adjusting bolt.

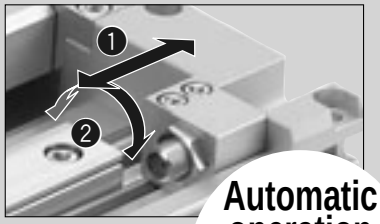

Automatic operation
Operable by the same signals (PLC) as the solenoid valve.

2 Stroke learning

Press STROKE STUDY switch.

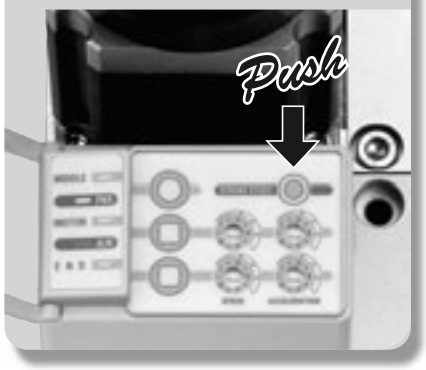

3 Speed and acceleration setting

Adjust SPEED, ACCELERATION.

Locking Functions

Settings for speed/acceleration can be locked.
If the speed/acceleration switch is changed in the middle of locking, the alarm light will blink. However, the motion will continue in accordance with the preprogrammed settings.

∗ Settings for locking a stroke and intermidiate position are not applicable.

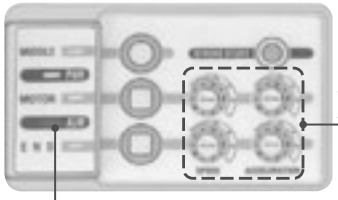

Remote Control Type

Easy to reset after installation as a result of the remote controller.
Suited for installing where it is difficult to reach because the controller can be operated in an easily accessible location.

- **Cable length is selectable from 1 m, 3 m and 5 m.**
- **Improvement in the maximum operating temperature from 40°C to 50°C (Actuator unit only)**
- **Mounting method can be selected among 3 types.**

Direct mount **DIN rail mount** **L-bracket mount**

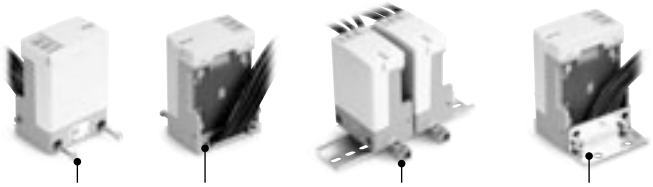

M4 screw (accessory) M5 tapped Mounting bracket Mounting bracket

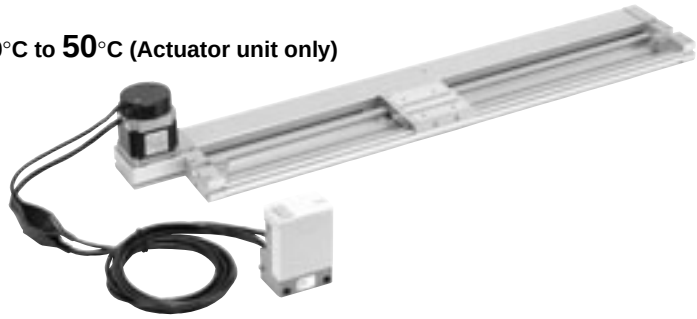

Intermediate Stop

3-point stoppable type
(2-point for both ends and 1-point for an intermediate stop)

One intermediate stop is possible beside stops at both ends.

5-point stoppable type
(2-point for both ends and 3-point for an intermediate stop)

5-point positioning is possible at any preferred locations.

3-point stoppable type

5-point stoppable type (with streamer)

Stop Functions by External Inputs (5-point stoppable type only)

Stop command by an external input such as a PLC or PC makes it possible to decelerate or stop a slider (as programmed).

Application example 1

Quick start-up is possible after stopping.

Stop method	Stop by external inputs	Emergency stop
Stopping acceleration (deceleration speed)	Value of a switch for setting acceleration	4.9 m/s^2
Initial motion speed after stopping	Value of a switch for speed	50 mm/s

∗ Settings for emergency acceleration and speed cannot be changed.

Repeatability of stop functions by external stop

Travelling speed (mm/s)	100	500	1000
Repeatability (mm)	±0.5	±1.0	±2.0

Note) The valves shown are to be used as a selection guide and are not guaranteed.

Application example 2

Signal from auto switches on the e-rodless cylinder can make it decelerate or stop.

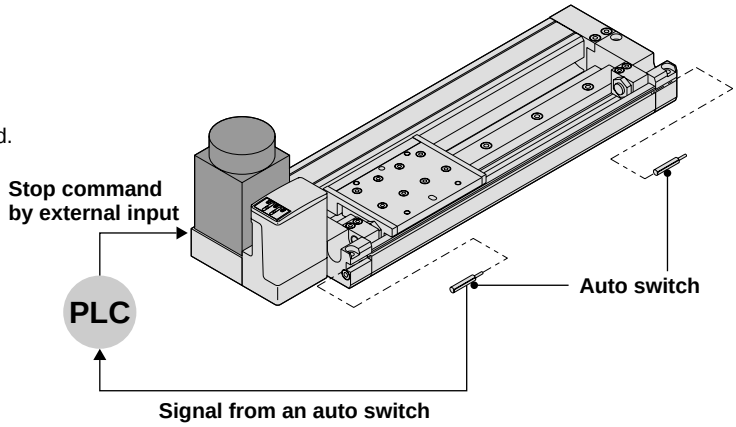

Easy Maintenance

The actuating part and the guide unit can be separated from the cylinder body.

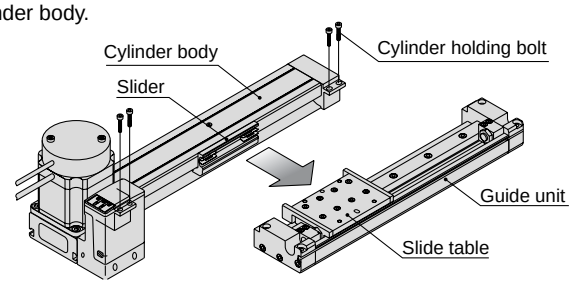

Motor Placement: Mounting position of the motor is user selectable and can either be on the top, bottom, left, or right of the actuator.

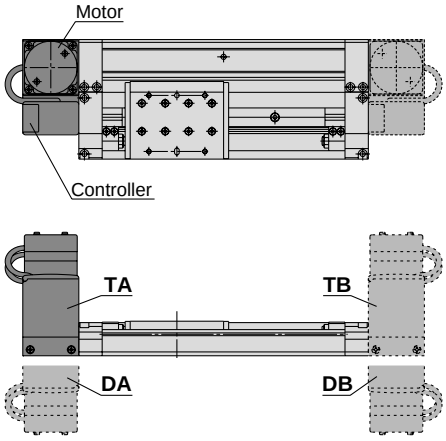

Motor placement

TA	On the top, Standard
DA	On the bottom, Standard
TB	On the top, Symmetric
DB	On the bottom, Symmetric

Model Selection 1

For e-rodless actuator E-MY2B series, refer to page 1089.

The following are steps for selecting the E-MY2 series best suited for your application.

Selection Flow Chart

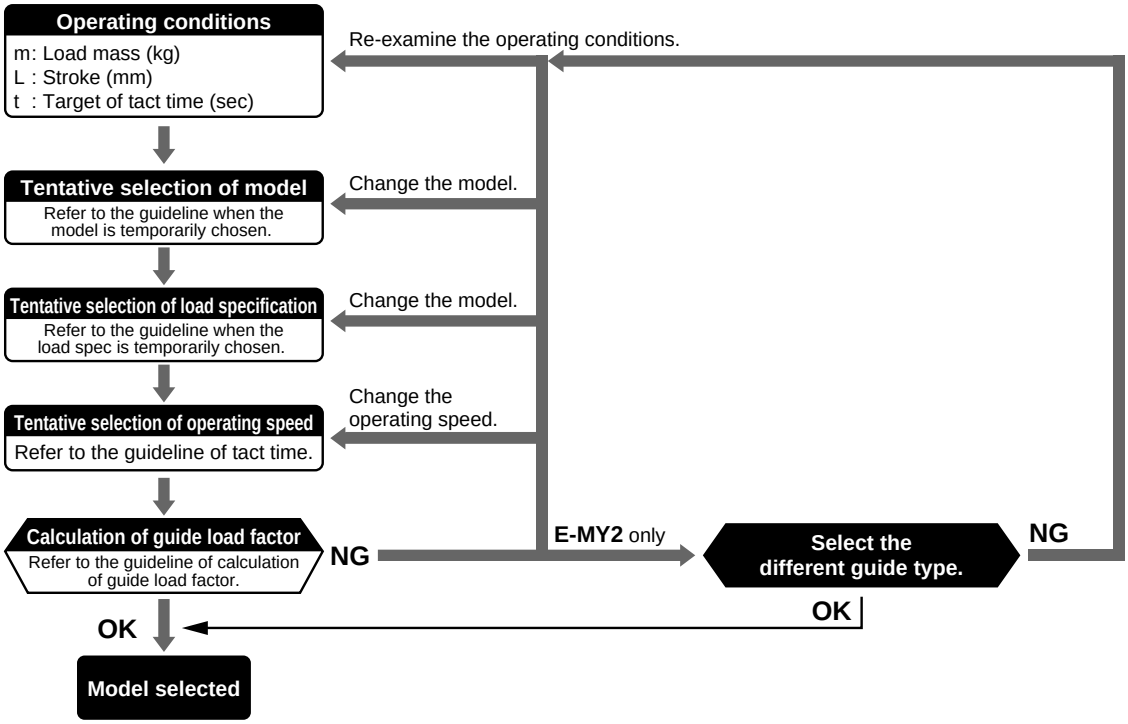

Guideline for Tentative Model Selection

Model	Type	Guideline for tentative model selection						Note
		Stroke accuracy	Use of external guide	Direct loaded (Horizontal)	Table accuracy Note)	Direct mount (Wall mounting)	Load resistance / Moment resistance	
E-MY2B	Basic type	◎	◎	○	△	△	△	Light-load transfer; combining with another guide; stroke accuracy is required.
E-MY2C	Cam follower guide type	◎	×	◎	◎	○	○	Workpiece direct mounting; table and stroke accuracy are required.
E-MY2H	Linear guide single axis type	◎	×	◎	◎	◎	○	Workpiece direct mounting without restriction of mounting direction; table and stroke accuracy are required.
E-MY2HT	Linear guide double axis type	◎	×	◎	◎	◎	◎	Workpiece direct mounting without restriction of mounting direction; table and stroke accuracy are required especially when a heavy load or moment is applied.

◎ Most suitable ○ Suitable △ Usable × Not recommended
Note) The table accuracy means the amount of table deflection when a moment is applied.

Guideline for when the load spec is temporarily chosen.

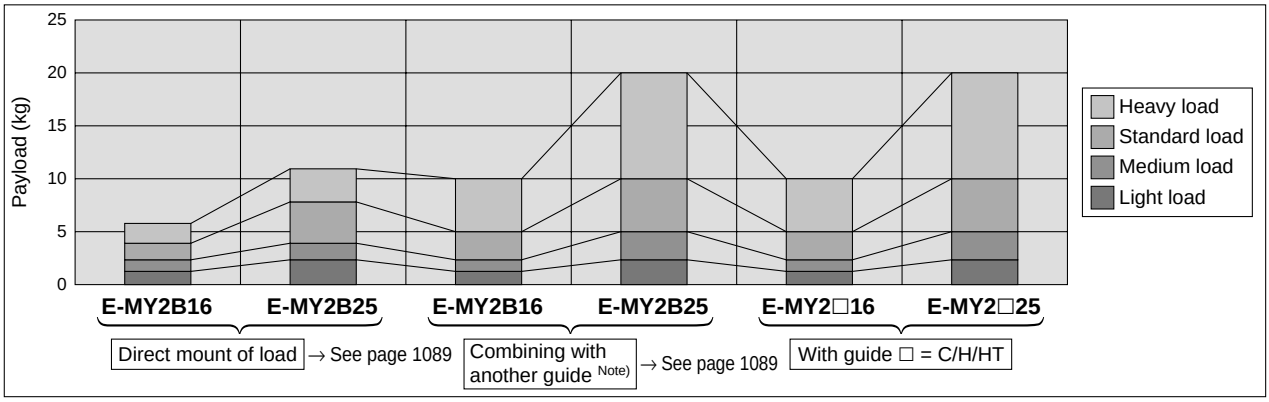

Note) Friction coefficient for combining with another guide is 0.1 or less.

Guide Tact Time

Heavy Load (2.45 m/s²)

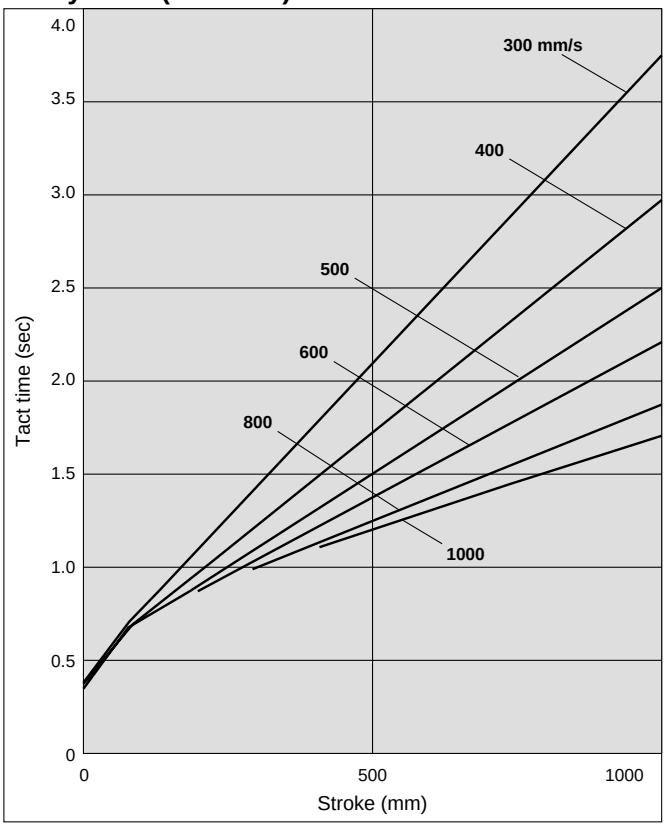

Standard Load (4.90 m/s²)

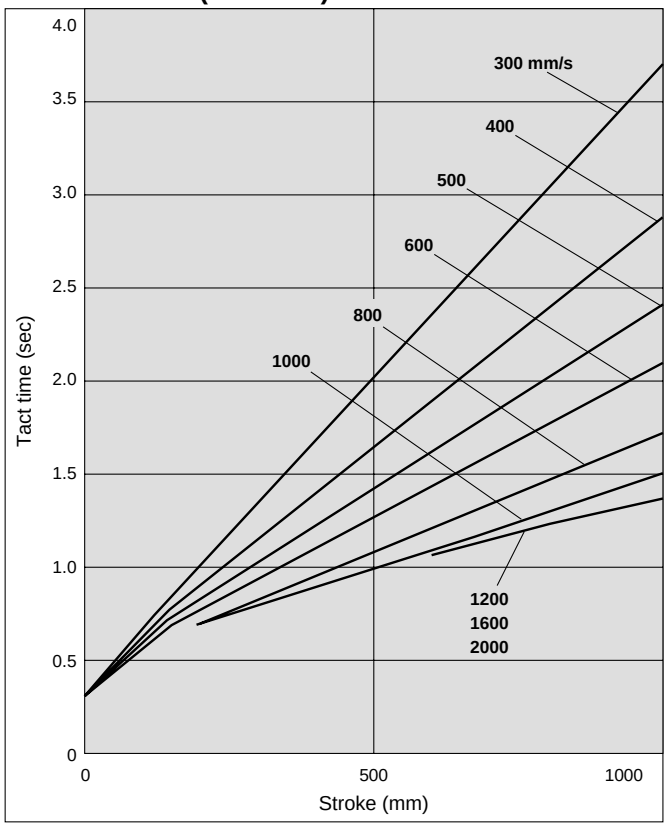

Medium Load (9.80 m/s²)

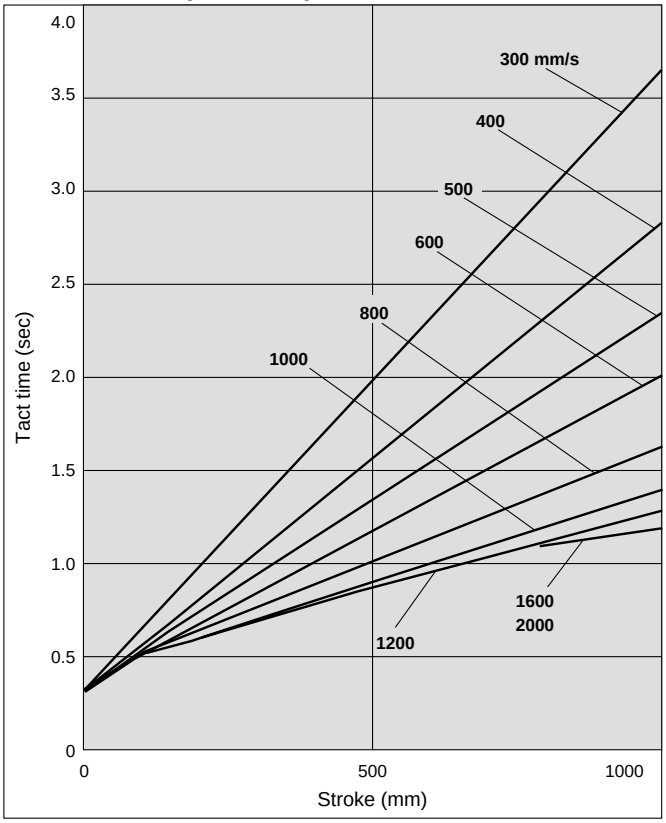

Light Load (19.60 m/s²)

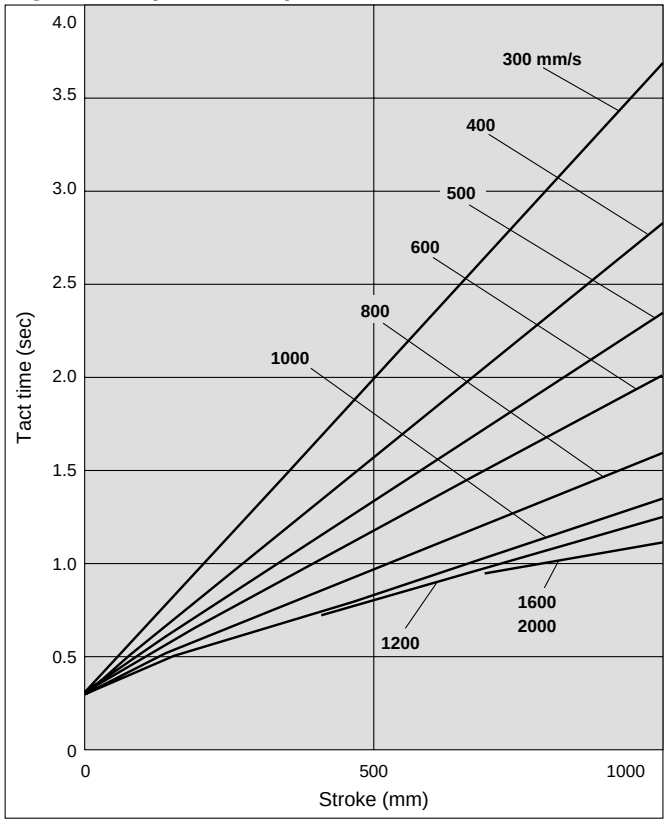

Note) Tact time may vary depending on the load mass or sliding resistance and thus value is not guaranteed.

Model Selection 2

The following are steps for selecting the E-MY2 series best suited for your application.

Types of Moment Applied to Rodless Cylinders

Multiple moments may be generated depending on the mounting orientation, load, and position of the center of gravity.

Coordinates and moments

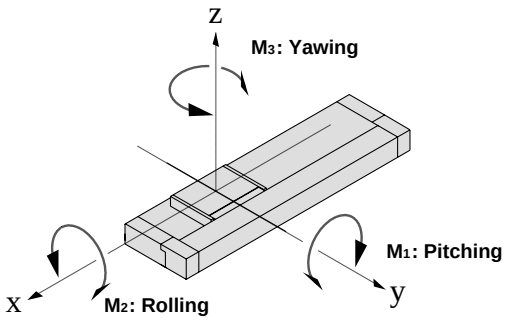

Dynamic moment

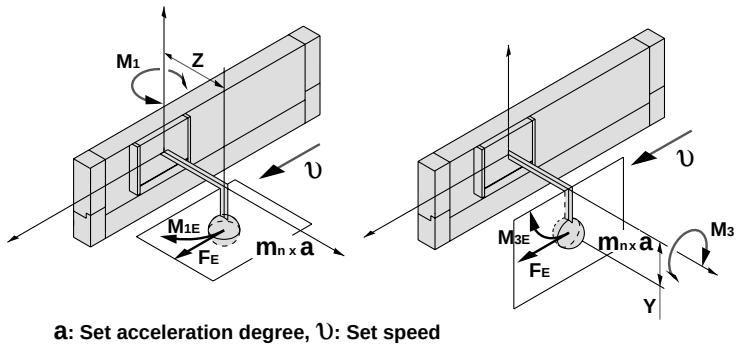

a: Set acceleration degree, υ: Set speed

Mounting orientation		Horizontal mounting	Ceiling mounting	Wall mounting
Dynamic load (F_E)		$m_n \times a$		
Dynamic moment	M_{1E}	$\frac{1}{3} \times F_E \times Z$		
	M_{2E}	Dynamic moment M_{2E} does not occur.		
	M_{3E}	$\frac{1}{3} \times F_E \times Y$		

Note) Regardless of the mounting orientation, dynamic moment is calculated with the formulas above.

Static moment

Horizontal mounting

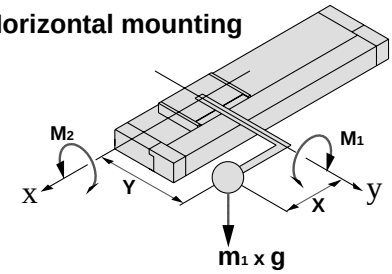

Ceiling mounting

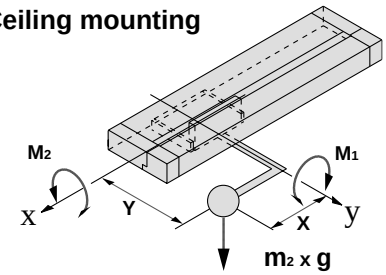

Wall mounting

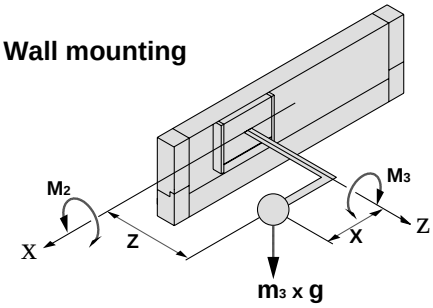

Mounting orientation		Horizontal mounting	Ceiling mounting	Wall mounting
Static load (m)		m_1	m_2	m_3
Static moment	M_1	$m_1 \times g \times X$	$m_2 \times g \times X$	——
	M_2	$m_1 \times g \times Y$	$m_2 \times g \times Y$	$m_3 \times g \times Z$
	M_3	——	——	$m_3 \times g \times X$

g: Gravitational acceleration (9.8 m/s²)

Maximum Allowable Moment/Maximum Load Mass

Model	Nominal size (mm)	Maximum allowable moment (N·m)			Maximum load mass (kg)		
		M_1	M_2	M_3	m_1	m_2	m_3
E-MY2C	16	5	4	3.5	18	16	14
	25	13	14	10	35	35	30
E-MY2H	16	7	6	7	15	13	13
	25	28	26	26	32	30	30
E-MY2HT	16	46	55	46	20	18	18
	25	100	120	100	38	35	35

The above values are the maximum allowable values for moment and load mass. Refer to each graph regarding the maximum allowable moment and maximum load mass for a particular slide table speed.

Load mass (kg)

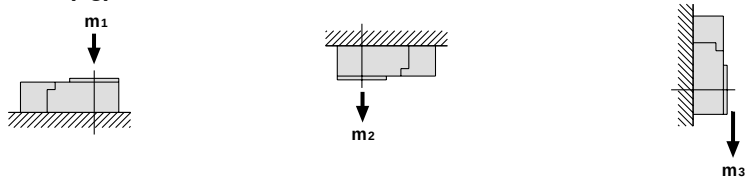

Moment (N·m)

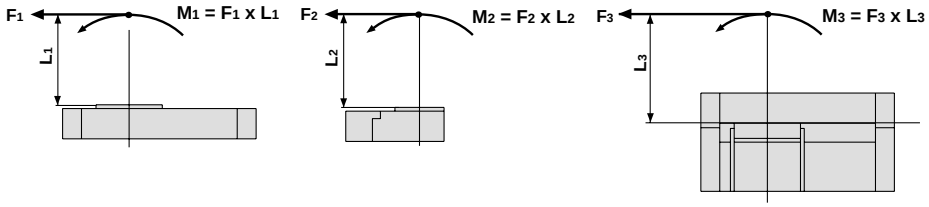

<Calculation of guide load factor>

1. Maximum allowable load (1), static moment (2), and dynamic moment (at the time of acceleration/deceleration) (3) must be examined for the selection calculations.

∗ Calculate m max for (1) from the maximum load mass (m_1, m_2, m_3) and Mmax for (2) and (3) from the maximum allowable moment graph (M_1, M_2, M_3).

Sum of guide load factors

$$\Sigma\alpha = \frac{\text{Load mass [m]}}{\text{Maximum load mass [m max]}} + \frac{\text{Static moment [M]}^{\text{Note 1)}}}{\text{Allowable static moment [Mmax]}} + \frac{\text{Dynamic moment [M}_E\text{]}^{\text{Note 2)}}}{\text{Allowable dynamic moment [M}_E\text{max]}} \leqq 1$$

Note 1) Moment caused by the load, etc., with actuator in resting condition.
Note 2) Moment caused by the impact load equivalent at the stroke end (at the time of collision to stopper).
Note 3) Depending on the shape of the workpiece, multiple moments may occur. When this happens, the sum of the load factors ($\Sigma\alpha$) is the total of all such moments.

2. Reference formulas [Dynamic moment at impact]
Use the following formulas to calculate dynamic moment when taking stopper impact into consideration.

m : Load mass (kg)
F : Load (N)
F_E: Load at acceleration and deceleration (N)
a : Set acceleration (m/s^2)
υ : Set speed (mm/s)
M : Static moment (N·m)
F_E = m·a

$$\therefore M_E = \frac{1}{3} \cdot F_E \cdot L_1 \text{ (N·m)}^{\text{Note 4)}}$$

L_1 : Distance to the load's center of gravity (m)
M_E: Dynamic moment (N·m)

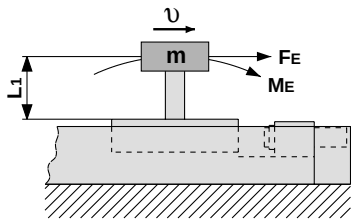

Note 4) Average load coefficient (= $\frac{1}{3}$):
This coefficient is for averaging the dynamic moment according to service life calculations.

3. Refer to pages 1123 and 1124 for detailed model selection procedures.

Maximum Allowable Moment

Select the moment from within the range of operating limits shown in the graphs. Note that the maximum allowable load value may sometimes be exceeded even within the operating limits shown in the graphs. Therefore, also check the allowable load for the selected conditions.

Maximum Load Mass

Select the load mass from within the range of limits shown in the graphs. Note that the maximum allowable moment value may sometimes be exceeded even within the operating limits shown in the graphs. Therefore, also check the allowable moment for the selected conditions.

The graph value is for calculating the guide load factors. Refer to the table below for actual maximum load mass. The load mass shows the motor ability.

Refer to the pages below for maximum load mass value.

E-MY2C	P.1127
E-MY2H	P.1133
E-MY2HT	

⚠ Caution

Select the required model by taking into consideration the operating condition specifications and any possible specification changes that may occur during operation. Contact the nearest sales representative for SMC's model selection software, which will help in selecting the correct model.

Model Selection

Maximum Allowable Moment/Maximum Load Mass

Moment: E-MY2C

E-MY2C/M1

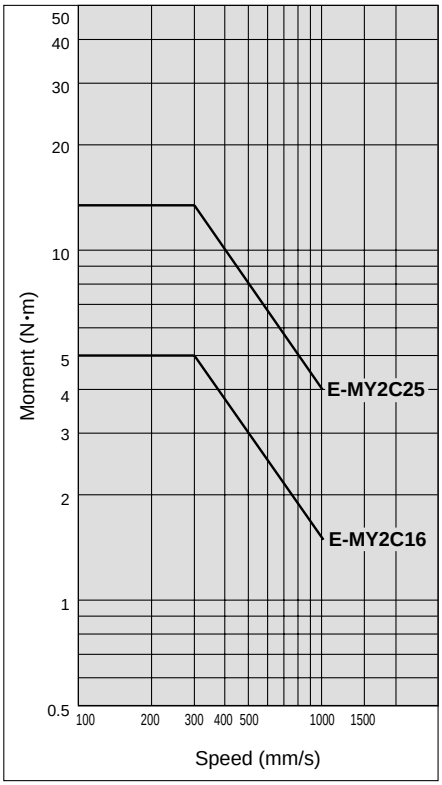

E-MY2C/M2

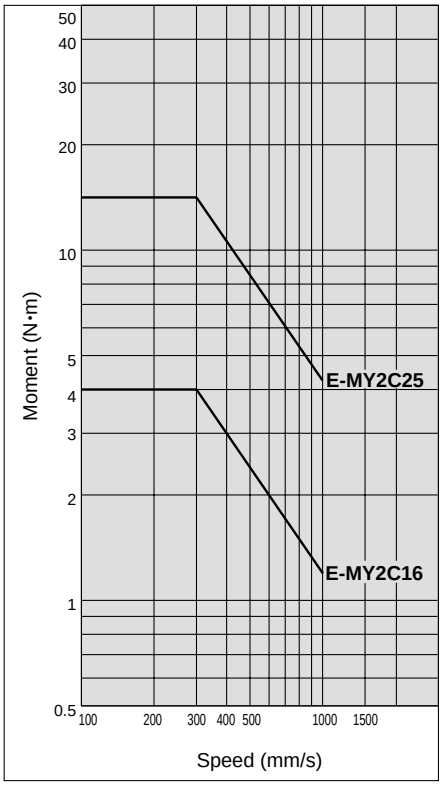

E-MY2C/M3

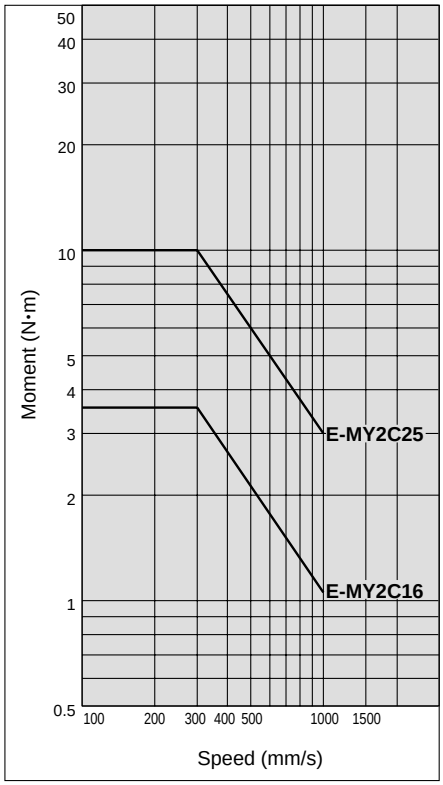

Load Mass: E-MY2C

E-MY2C/m1

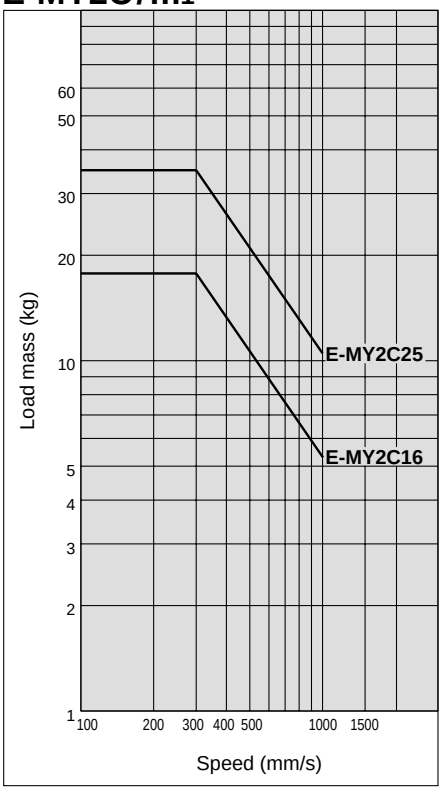

E-MY2C/m2

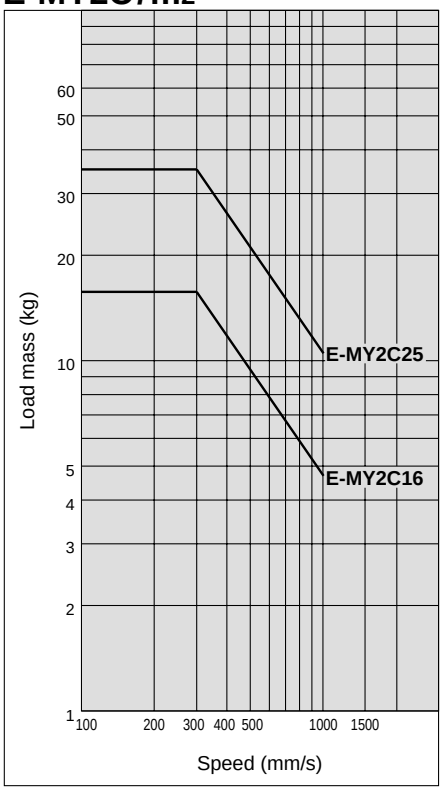

E-MY2C/m3

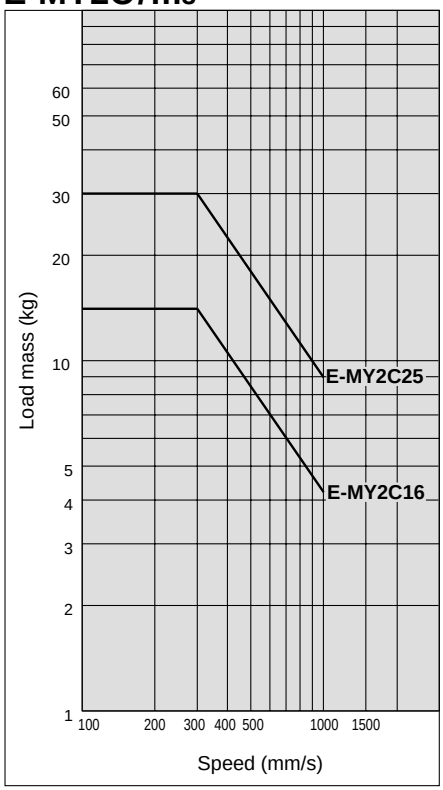

Moment: E-MY2H (Single Axis)

E-MY2H/M1

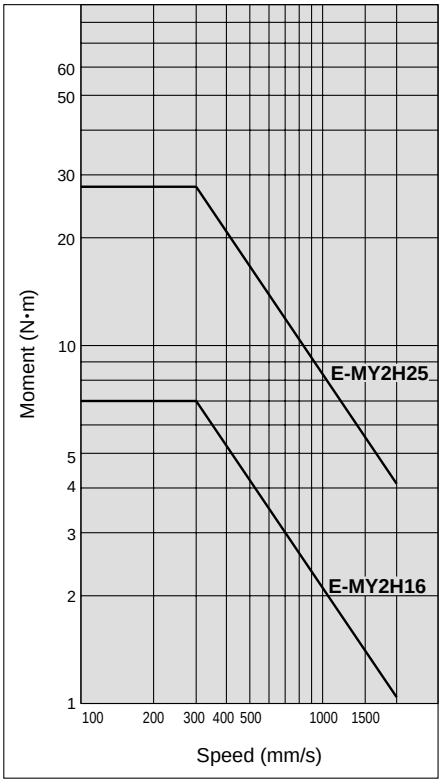

E-MY2H/M2

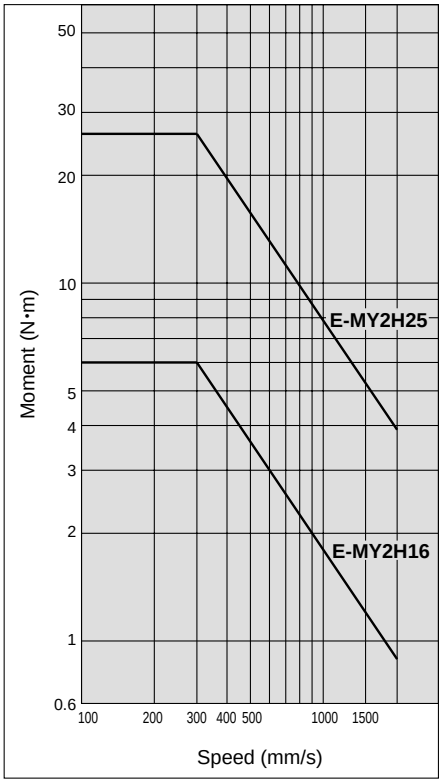

E-MY2H/M3

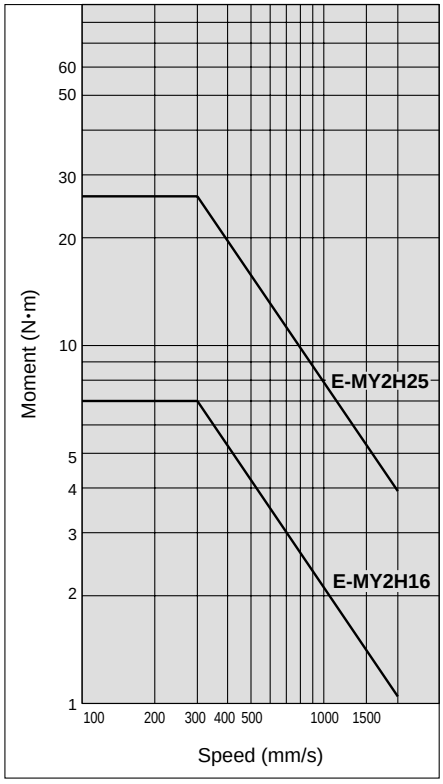

Load Mass: E-MY2H (Single Axis)

E-MY2H/m1

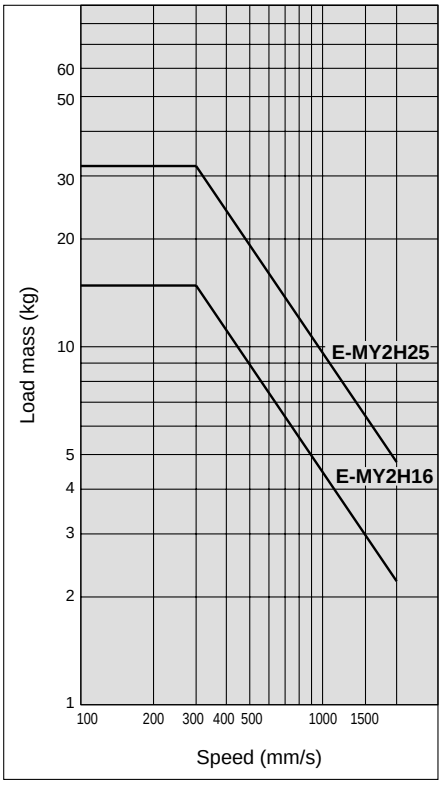

E-MY2H/m2

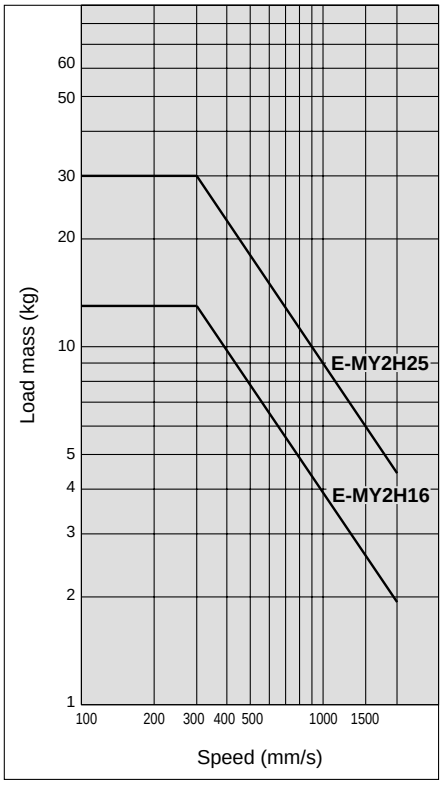

E-MY2H/m3

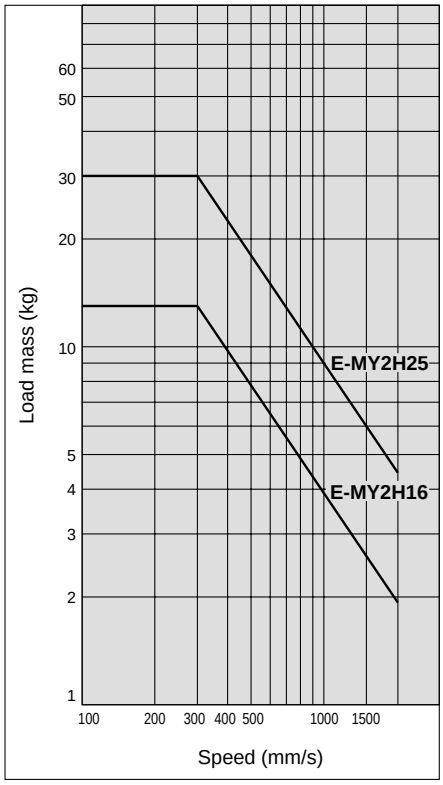

Model Selection

Maximum Allowable Moment/Maximum Load Mass

Moment: E-MY2HT (Double Axis)

E-MY2HT/M1

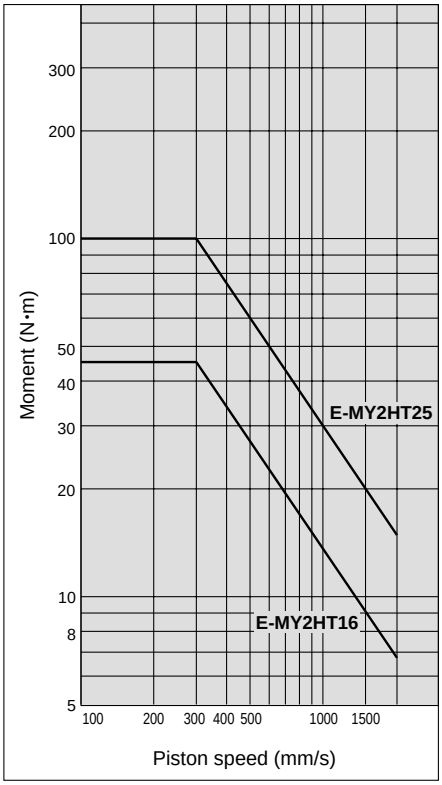

E-MY2HT/M2

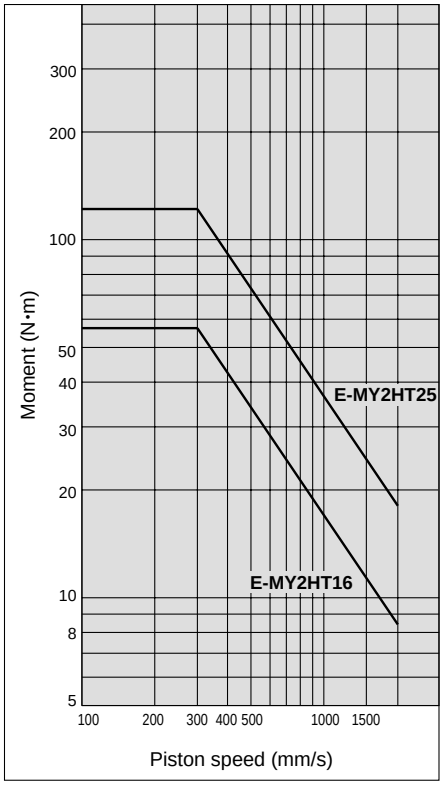

E-MY2HT/M3

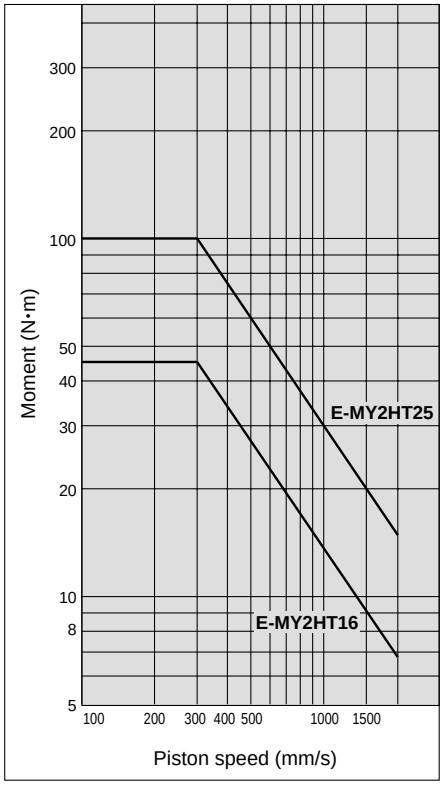

Load Mass: E-MY2HT (Double Axis)

E-MY2HT/m1

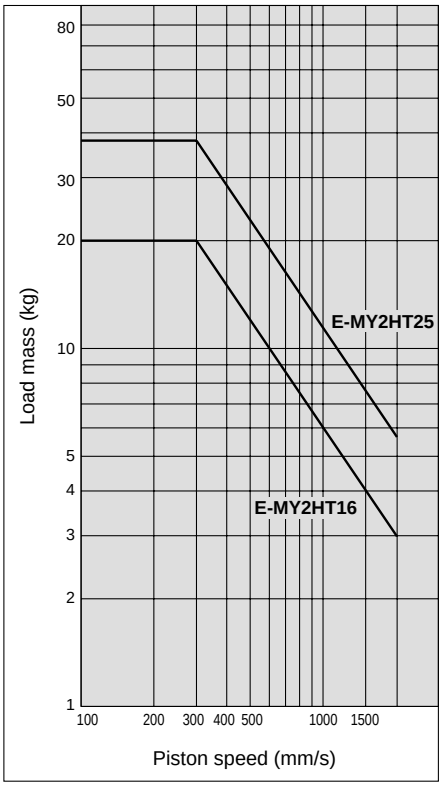

E-MY2HT/m2

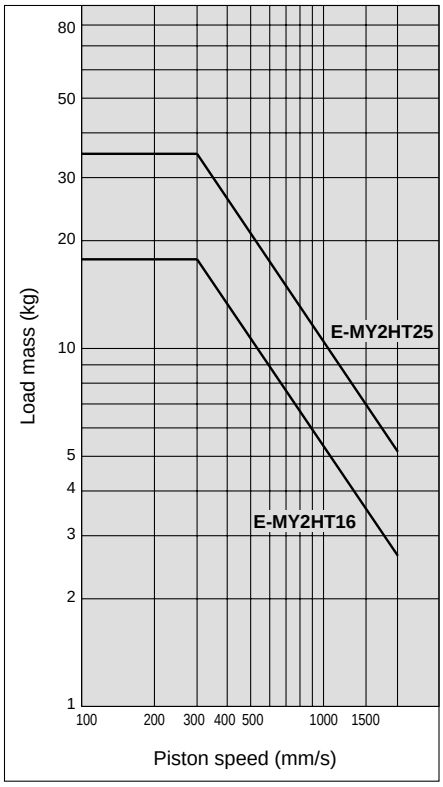

E-MY2HT/m3

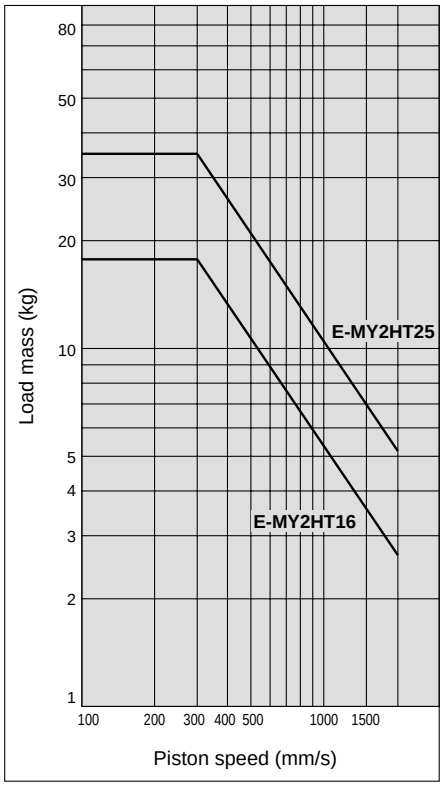

Model Selection 3

The following are steps for selecting the E-MY2 series best suited for your application.

Calculation of Guide Load Factor

1 Operating Conditions

Operating cylinder ····· **E-MY2H25-500**
Set speed υ ····· **400 mm/s** Note)
Set acceleration degree a ····· **4.9 m/s²** Note)
Mounting orientation ···· **Wall mounting**

Note) Regarding the speed and acceleration setting, select from the speed/acceleration chart on pages 1127 and 1133.

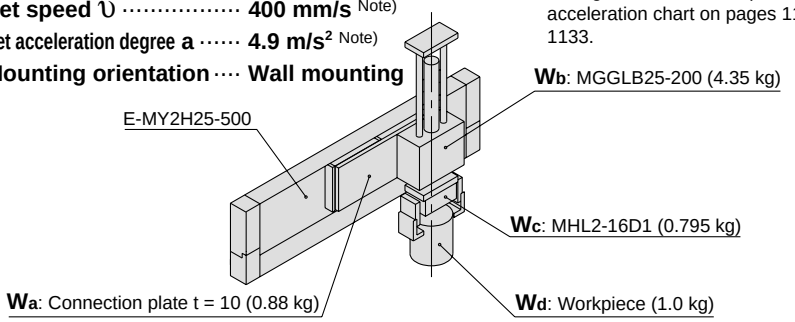

Mounting Orientation

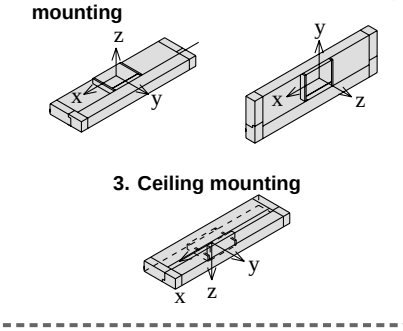

2 Load Blocking

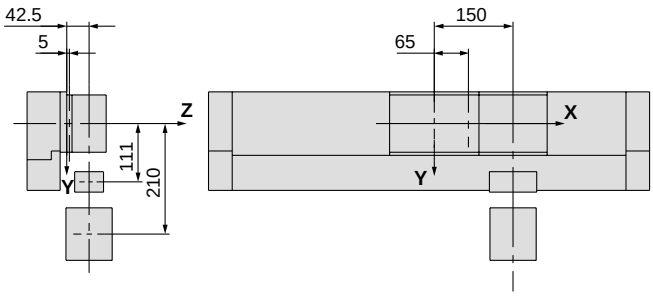

Mass and Center of Gravity for Each Workpiece

Work-piece no. (Wn)	Mass (mn)	Center of gravity		
		X-axis Xn	Y-axis Yn	Z-axis Zn
Wa	0.88 kg	65 mm	0 mm	5 mm
Wb	4.35 kg	150 mm	0 mm	42.5 mm
Wc	0.795 kg	150 mm	111 mm	42.5 mm
Wd	1.0 kg	150 mm	210 mm	42.5 mm

n = a, b, c, d

3 Calculation of Composite Center of Gravity

$m_3 = \Sigma m_n$
$= 0.88 + 4.35 + 0.795 + 1.0 =$ **7.025 kg**

$X = \frac{1}{m_3} \times \Sigma (m_n \times x_n)$
$= \frac{1}{7.025} (0.88 \times 65 + 4.35 \times 150 + 0.795 \times 150 + 1.0 \times 150) =$ **139.4 mm**

$Y = \frac{1}{m_3} \times \Sigma (m_n \times y_n)$
$= \frac{1}{7.025} (0.88 \times 0 + 4.35 \times 0 + 0.795 \times 111 + 1.0 \times 210) =$ **42.5 mm**

$Z = \frac{1}{m_3} \times \Sigma (m_n \times z_n)$
$= \frac{1}{7.025} (0.88 \times 5 + 4.35 \times 42.5 + 0.795 \times 42.5 + 1.0 \times 42.5) =$ **37.8 mm**

4 Calculation of Load Factor for Static Load

m_3: Mass

m_3 max (from 1 of graph MY2H / m_3) = 22.5 (kg) ·····

Load factor $\alpha_1 = m_3 / m_3$ max = 7.025 / 22.5 = **0.31**

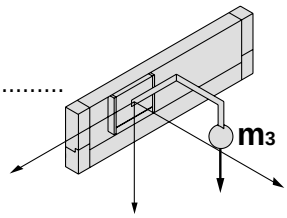

M_2: Moment

M_2 max (from 2 of graph MY2H / M_2) = 19.5 (N·m) ·····

$M_2 = m_3 \times g \times Z = 7.025 \times 9.8 \times 37.8 \times 10^{-3} = 2.60$ (N·m)

Load factor $\alpha_2 = M_2 / M_2$ max = 2.60 / 19.5 = **0.13**

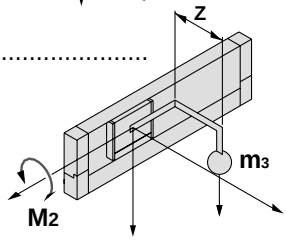

Model Selection 4

The following are steps for selecting the E-MY2 series best suited for your application.

Calculation of Guide Load Factor

M_3: Moment

M_3 max (from 3 of graph MY2H / M_3) = 19.5 (N•m) .....

$M_3 = m_3 \times g \times X = 7.025 \times 9.8 \times 139.4 \times 10^{-3} = 9.59$ (N•m)

Load factor $\alpha_3 = M_3 / M_3\,\text{max} = 9.59 / 19.5 =$ **0.49**

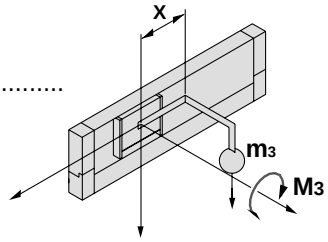

5 Calculation of Load Factor for Dynamic Moment

Load F_E at acceleration and deceleration

$F_E = m \times a = 7.025 \times 4.9 = 34.42$ (N)

M_{1E}: Moment

M_{1E} max (from 4 of graph MY2H / M_1) = 21.0 (N•m) .....

$M_{1E} = \frac{1}{3} \times F_E \times Z = \frac{1}{3} \times 34.42 \times 37.8 \times 10^{-3} = 0.43$ (N•m)

Load factor $\alpha_4 = M_{1E} / M_{1E}\,\text{max} = 0.43 / 21.0 =$ **0.02**

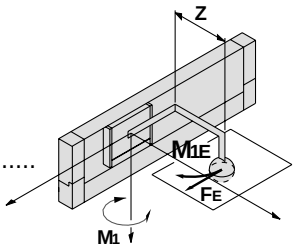

M_{3E}: Moment

M_{3E} max (from 5 of graph MY2H / M_3) = 19.5 (N•m) .....

$M_{3E} = \frac{1}{3} \times F_E \times Y = \frac{1}{3} \times 34.42 \times 42.5 \times 10^{-3} = 0.49$ (N•m)

Load factor $\alpha_5 = M_{3E} / M_{3E}\,\text{max} = 0.49 / 19.5 =$ **0.03**

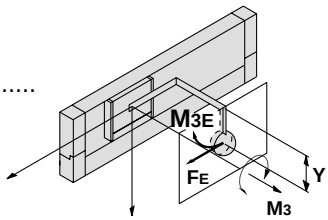

6 Sum and Examination of Guide Load Factors

$\Sigma\alpha = \alpha_1 + \alpha_2 + \alpha_3 + \alpha_4 + \alpha_5 = 0.98 \leqq 1$

The above calculation is within the allowable value and therefore the selected model can be used.
In an actual calculation, when sum of guide load factors $\Sigma\alpha$ in the formula above is more than 1, consider decreasing the speed, increasing the bore size, or changing the product series.

Load Mass

E-MY2H/m_3

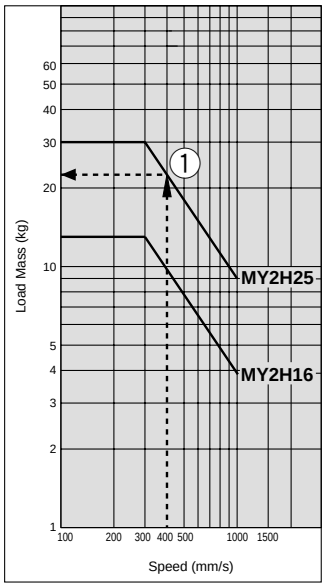

Allowable Moment

E-MY2H/M_1

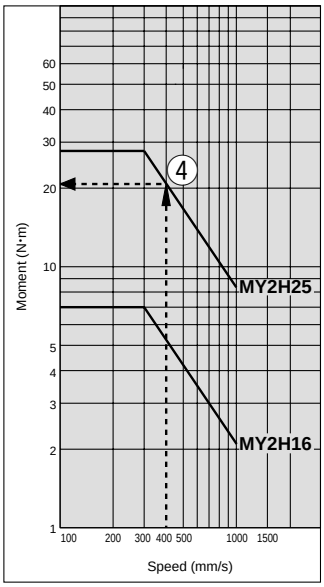

E-MY2H/M_2

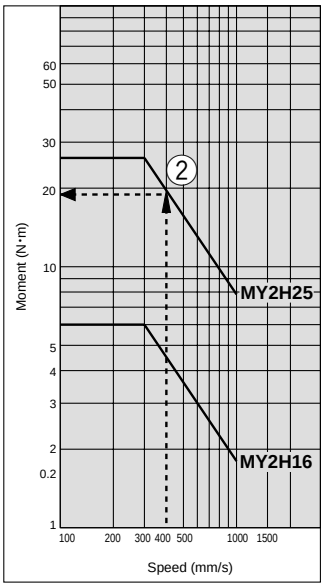

E-MY2H/M_3

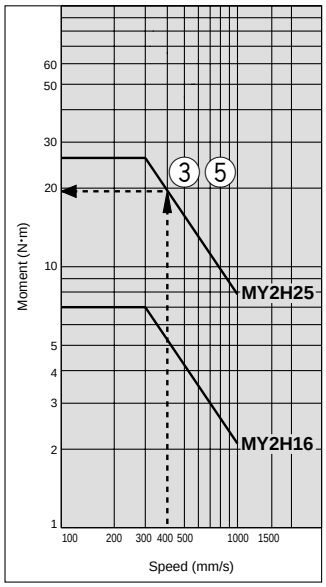

e-Rodless Actuator

Series ***E-MY2C***

Cam Follower Guide Type

Nominal Size: 16, 25

e-Rodless Actuator

Series E-MY2C

Cam Follower Guide Type / Nominal Size: 16, 25

How to Order

Integrated control type E-MY2C 16 ☐ ☐ - 100 TA N ☐ —— M9BW ☐ —— ☐

Remote control type E-MY2C 16 ☐ ☐ - 100 TA N ☐ M - M9BW ☐ - ☐ - ☐

Nominal size

16
25

Speed specifications* [mm/s]

L	Low	10 to 1000
M	Medium	50 to 1000
Nil	Standard	100 to 1000

* Cam follower type is not available for high speed.

Load specifications* Work load [kg]

Symbol	Load specifications \ Nominal size	16	25
D	Light load	1.25	2.5
E	Medium load	2.5	5
Nil	Standard load	5	10
Q	Heavy load	10	20

* For details, refer to "Switch and Speed," "Switch and Acceleration" on the next page.

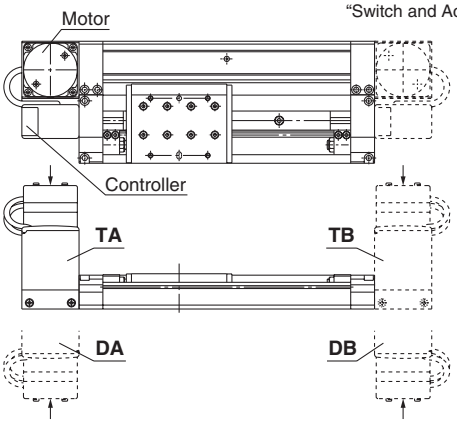

* Arrow mark shows handling side on controller.

Stroke

Refer to "Standard Stroke" table.

Motor placement

TA	On the top, Standard
DA	On the bottom, Standard
TB	On the top, Symmetric
DB	On the bottom, Symmetric

Made to Order

(Refer to page 1127.)

CE compliant

Nil	—
Q	CE compliant

* No need to add a suffix for the integrated control type. It is provided with a CE compliant product.
* Noise filter is provided but not attached for the "Q" spec.

Number of auto switches

Nil	2 pcs.
S	1 pc.
n	n

Auto switch

Nil	Without auto switch

* Refer to the table below for auto switch model numbers.

Standard Stroke

Nominal size	Standard stroke (mm)
16, 25	100, 200, 300, 400, 500, 600, 700, 800, 900, 1000

* Strokes are manufacturable in increments of 1 mm, up to 100 to 1000 strokes.
* When exceeding a 1000 strokes, refer to "Made to Order" on page 1143.

Output type

N	NPN
P	PNP

Number of stoppable positioning points

Nil	3-point stoppable type
A	5-point stoppable type

Cable length

M	1 m
L	3 m
Z	5 m

* The remote control type can be selected by adding the above symbols.

Applicable Auto Switches / For detailed auto switch specifications, refer to page 352 through to 402.

Type	Special function	Electrical entry	Indicator light	Wiring (Output)	Load voltage DC		Load voltage AC	Auto switch model Perpendicular	Auto switch model In-line	Lead wire length (m)* 0.5 (Nil)	1 (M)	3 (L)	5 (Z)	Pre-wired connector	Applicable load	
Solid state switch	—	Grommet	Yes	3-wire (NPN)	24 V	5 V	—	M9NV	M9N	●	●	●	○	○	IC circuit	Relay, PLC
				3-wire (PNP)		12 V		M9PV	M9P	●	●	●	○	○		
				2-wire		12 V		M9BV	M9B	●	●	●	○	○	—	
	Diagnostic indication (2-color display)			3-wire (NPN)		5 V		M9NWV	M9NW	●	●	●	○	○	IC circuit	
				3-wire (PNP)		12 V		M9PWV	M9PW	●	●	●	○	○		
				2-wire		12 V		M9BWV	M9BW	●	●	●	○	○	—	
Reed switch	—	Grommet	Yes	3-wire (NPN equiv.)	—	5 V	—	A96V	A96	●	—	●	—	—	IC circuit	—
			None	2-wire	24 V	12 V	100 V	A93V	A93	●	—	●	—	—	—	Relay, PLC
						5 V, 12 V	100 V or less	A90V	A90	●	—	●	—	—	IC circuit	

* Lead wire length symbols: 0.5 m ····· Nil (Example) M9N
  1 m ····· M M9NWM
  3 m ····· L M9NWL
  5 m ····· Z M9NWZ
* Solid state auto switches marked "○" are produced upon receipt of order.
* For details of auto switches with pre-wired connector, refer to pages 389 and 390.
* Auto switch is shipped together, (not assembled).

Made to Order
(For details, refer to page 1143.)

Symbol	Specifications
X168	Helical insert thread specifications

Mass

Actuator Unit
Unit: kg

Nominal size	Basic mass	Additional mass per 50 mm stroke
16	2.00	0.14
25	3.71	0.21

Remote Controller Unit
Unit: kg

Controller body	Cable length		
	1 m	3 m	5 m
0.24	0.09	0.24	0.39

How to calculate/Example: **E-MY2C25-300TANM**

Actuator unit

Basic mass ..... 3.71 kg
Additional mass ..... 0.21/50 st
Actuator stroke ..... 300 st
3.71 + 0.21 x 300 ÷ 50 = 4.97 kg

Remote controller unit

Controller body ..... 0.24 kg
Cable length (3 m) ..... 0.24 kg
0.24 + 0.24 = 0.48 kg

∗ For an integrated control type, add 0.24 kg (controller body) to the basic mass.

Replacement Parts

Drive Unit Replacement Part No.

Model / Nominal size	E-MY2C
16	E-MY2BH16∗1- Stroke ∗2
25	E-MY2BH25∗1- Stroke ∗2

∗ Specify the speed / load specifications in ∗1 parts.
∗ Specify the motor position and output style in ∗2 parts.
For a remote control type, enter the symbol for cable length.
Example) E-MY2C16MQ-300TANAL
Drive unit replacement part no.
E-MY2BH16MQ-300TANAL

Option / Remote Controller Mounting Bracket

Description	Part no.
L-bracket	MYE-LB
DIN rail bracket	MYE-DB

Basic Specifications

Model		E-MY2C			
Transfer speed set range	Low	10 to 1000 mm/s			
	Medium	50 to 1000 mm/s			
	Standard	100 to 1000 mm/s			
Transfer speed acceleration set range		Heavy load	Standard load	Medium load	Light load
		0.25 to 2.45 m/s²	0.49 to 4.90 m/s²	0.98 to 9.80 m/s²	1.96 to 19.6 m/s²
Maximum load mass Note)	Nominal size: 16	10 kg	5 kg	2.5 kg	1.25 kg
	Nominal size: 25	20 kg	10 kg	5 kg	2.5 kg
Acceleration and deceleration method		Trapezoidal drive			
Moving direction		Horizontal direction			
Repeated positioning stopping precision	3-point stoppable type	Both ends (Mechanical stoppers), 1 intermediate position			
	5-point stoppable type	Both ends (Mechanical stoppers), 3 intermediate positions			
Repeated positioning stopping precision	Both ends	± 0.01 mm			
	Intermediate stopping position	± 0.1 mm			
Allowable external resistance	Nominal size: 16	10 N			
	Nominal size: 25	20 N			
Intermediate stopping point positioning method		Direct teaching, JOG teaching			
Positioning setting spot		Controller body			
Display		LED for power supply, LED for alarming, LED for positioning completion			
Input signal		Actuation command signal, Emergency stop input signal			
Output signal		Positioning completion signal, Emergency detection signal, Ready signal			

Note) The maximum load mass shows the motor ability. Please consider it together with the guide load factor when selecting a model.

Electrical Specifications

Power supply for driving	Power supply voltage	24 VDC ± 10%
	Current consumption	Rated current 2.5 A (Max. 5 A: 2 s or less) at 24 VDC
Power supply for signals	Power supply voltage	24 VDC ± 10%
	Current consumption	30 mA at 24 VDC and Output load capacity
Input signal capacity		6 mA or less at 24 VDC/1 circuit (Photo coupler input)
Output load capacity		30 VDC or less, 20 mA or less/1 circuit (Open drain output)
Emergency detection items		Emergency stop, Output deviation, Power supply deviation, Driving deviation, Temperature deviation Stroke deviation, Motor deviation, Controller deviation

Environmental Specifications

Operating temperature range	Integrated control type		5 to 40°C
	Remote control type	Actuator unit	5 to 50°C
		Remote controller unit	5 to 40°C
Operating humidity range			35 to 85%RH (No condensation)
Storage temperature range			–10 to 60°C (No condensation and freezing)
Storage humidity range			35 to 85%RH (No condensation)
Withstand voltage			Between all of external terminals and the case: 500 VAC for 1 minute
Insulation resistance			Between all of external terminals and the case: 50 MΩ (500 VDC)
Noise resistance			1000 Vp-p Pulse width 1 µs, Rise time 1 ns
CE marked	Integrated control type		Standard
	Remote control type		Available with -Q suffixed products only

Speed / Acceleration

Switch and Speed Note 1) [mm/s]

Switch no.	Low speed	Medium speed	Standard speed
1	10	50	100
2	20	75	200
3	30	100	300
4	40	125	400
5	50	150	500
6	75	200	600
7	100	250	700
8	300	300	800
9	500	500	900
10	1000	1000	1000

Switch and Acceleration Note 2) [m/s²]

Switch no.	Heavy load	Standard load	Medium load	Light load
1	0.25	0.49	0.98	1.96
2	0.49	0.74	1.47	2.94
3	0.74	0.98	1.96	3.92
4	0.98	1.23	2.45	4.90
5	1.23	1.47	2.94	5.88
6	1.47	1.96	3.92	7.84
7	1.72	2.45	4.90	9.80
8	1.96	2.94	5.88	11.76
9	2.21	3.92	7.84	15.68
10	2.45	4.90	9.80	19.60

Note 1) The factory default setting for the switch is No.1.
Note 2) The factory default setting for the switch is No.1.
Note 3) Cam follower type is not available for high speed.

Dimensions: Integrated Control Type

E-MY2C Nominal size – Stroke

Nominal size: 16

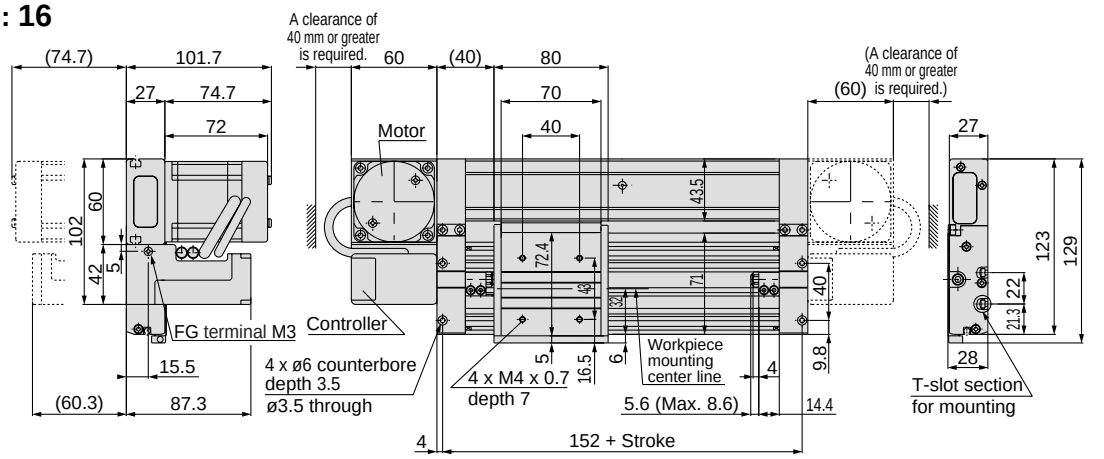

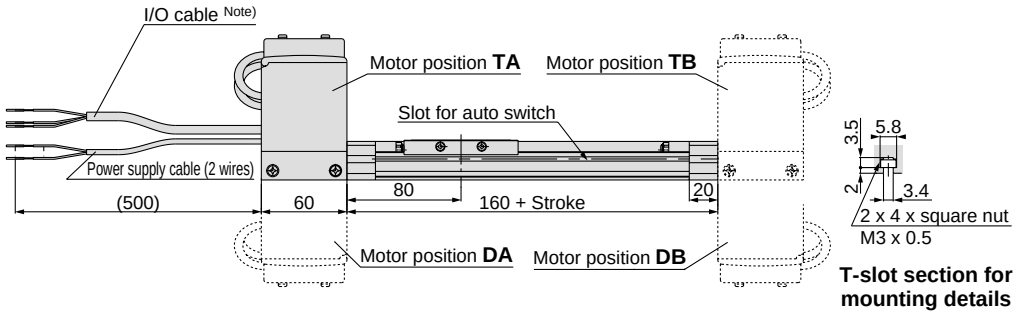

Nominal size: 25

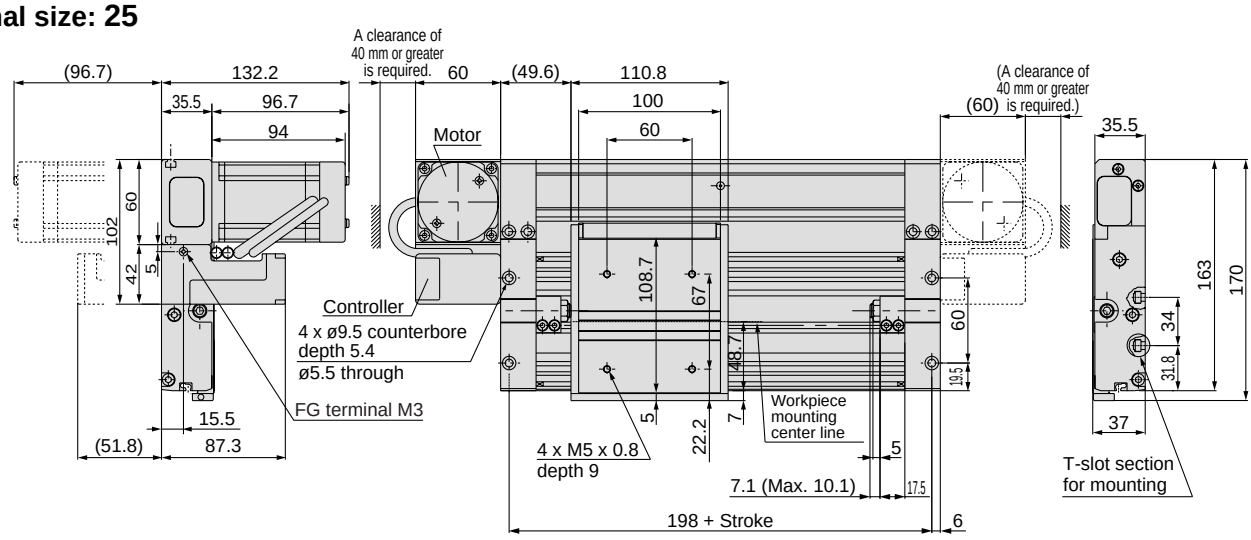

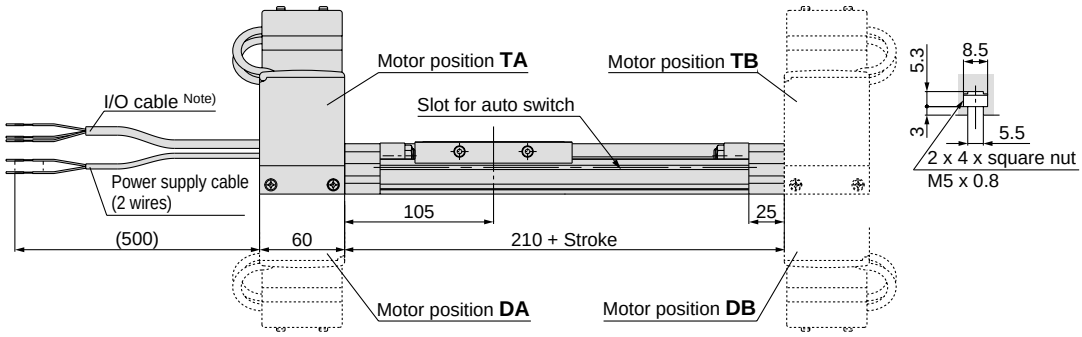

Note) For the 3-point stoppable type, the I/O cable is a 9-core type and for the 5-point stoppable type, a 11-core type is used.

Dimensions: Remote Control Type (Actuator unit)

E-MY2C Nominal size – Stroke □□ M L Z

∗ Refer to page 1130 for dimensions of remote controller.

Nominal size: 16

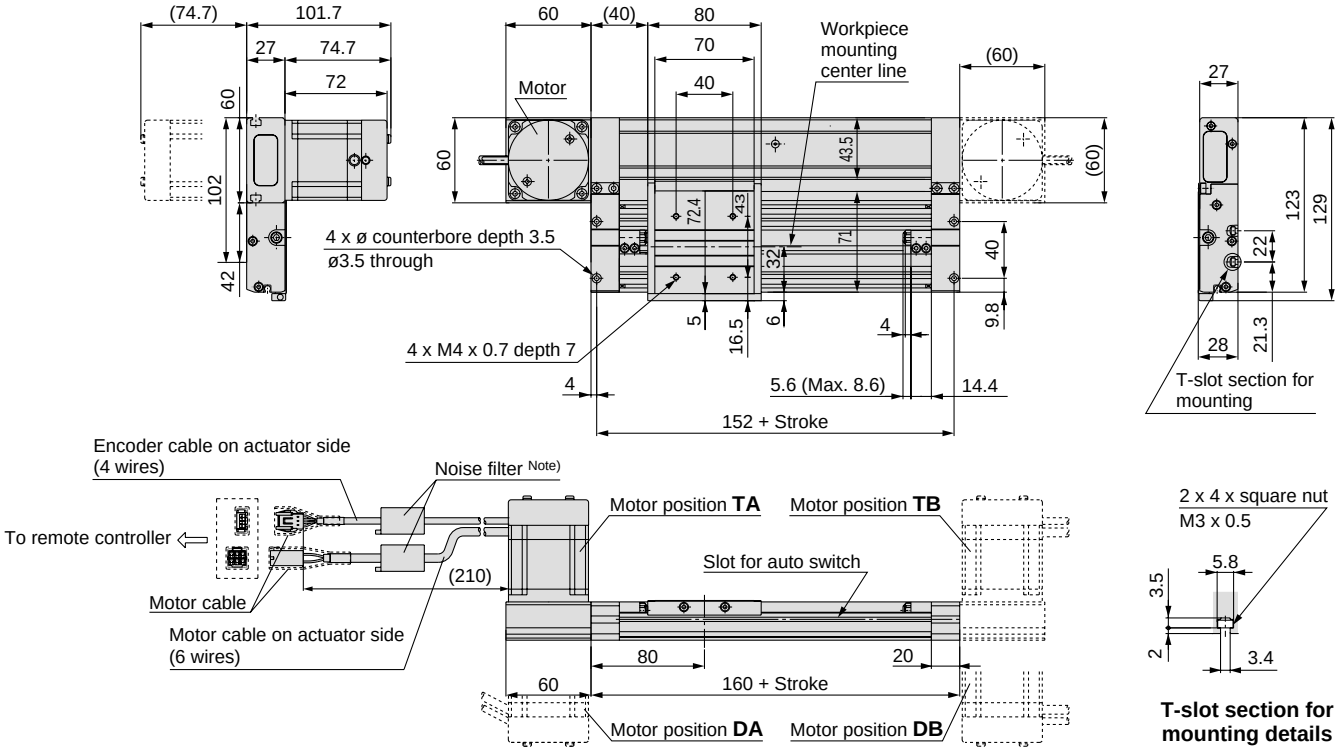

Nominal size: 25

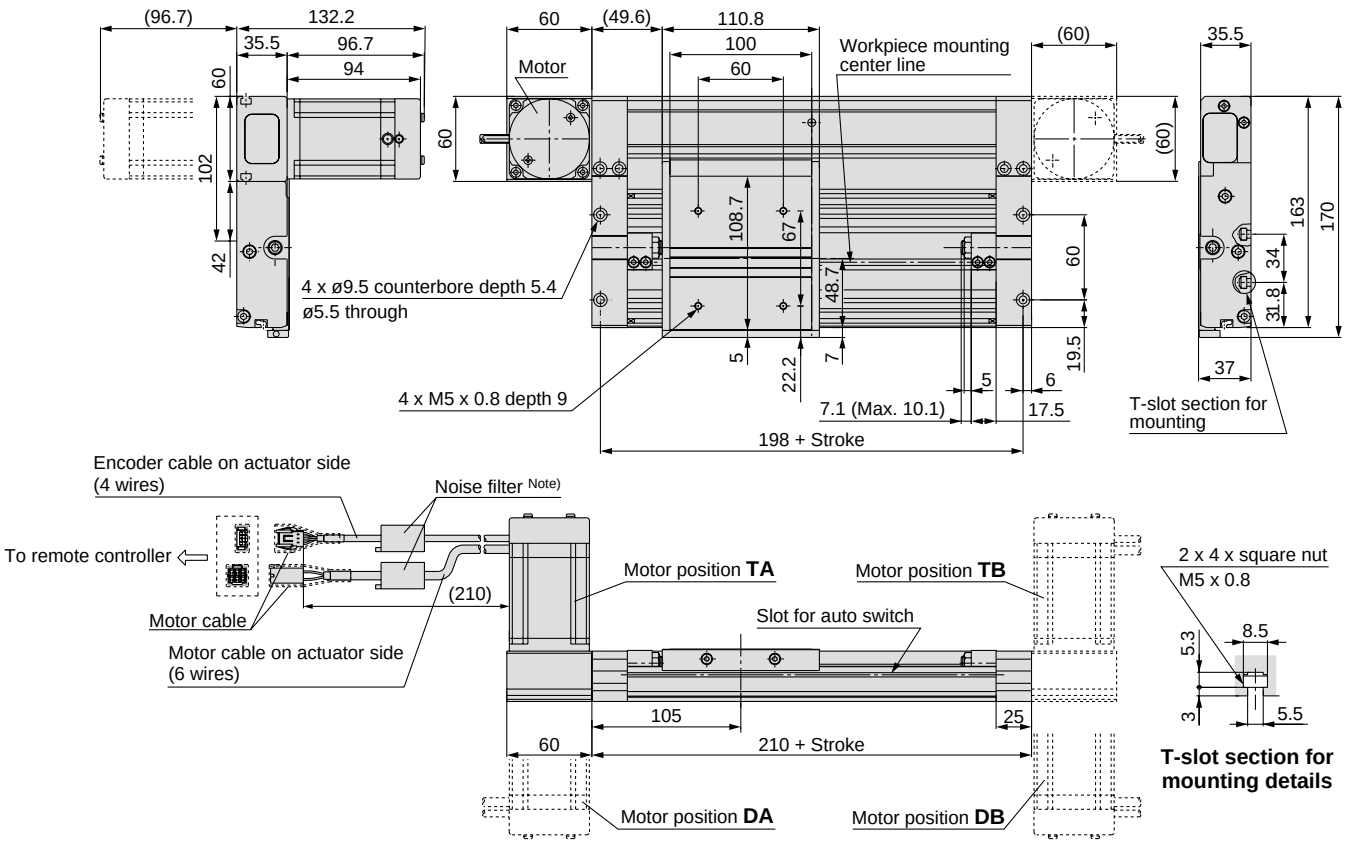

Note) When the CE compliant model is selected, a noise filter is provided but not attached.
The cable for the CE compliant models uses the dedicated shielding. Even if a noise filter is attached to a non CE marked products, the products cannot be changed to a CE compliant product.

Dimensions: Remote Control Type (Remote controller unit)

Controller

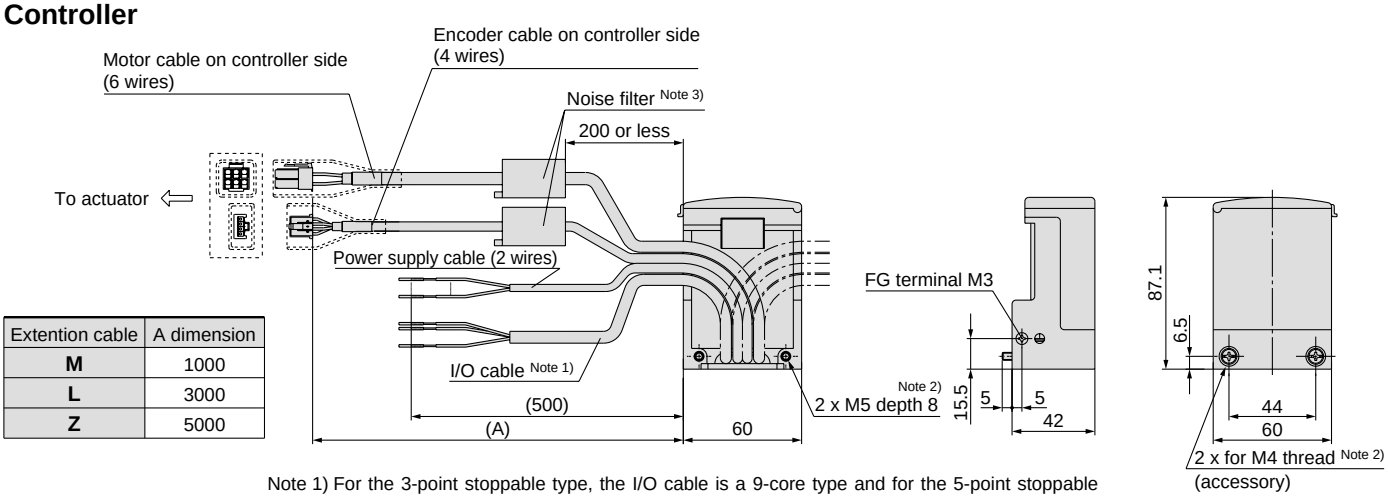

Extention cable	A dimension
M	1000
L	3000
Z	5000

Note 1) For the 3-point stoppable type, the I/O cable is a 9-core type and for the 5-point stoppable type, a 11-core type is used.
Note 2) When mounting the remote controller, use the included M4 screw or use the M5 tap located on one side of the controller.
Note 3) When the CE compliant model is selected, a noise filter is included but not attached.
The cable for the CE compliant models uses the dedicated shielding. Even if a noise filter is attached to a non CE marked product, the products cannot be changed to a CE compliant product.

L-bracket / MYE-LB (Option)

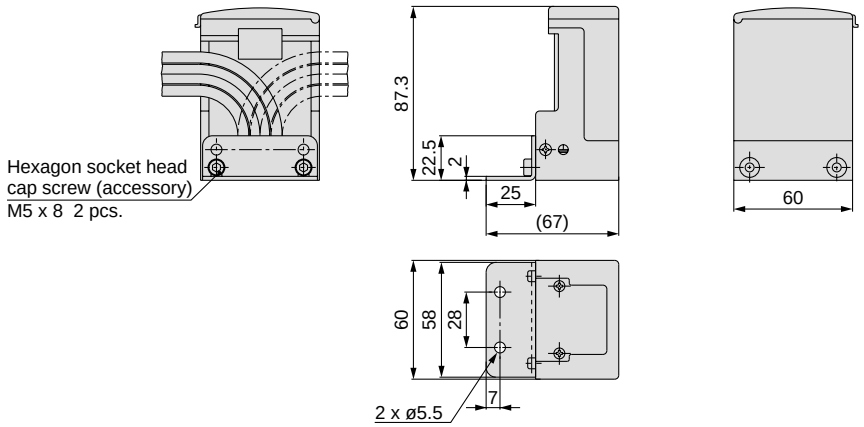

DIN rail bracket / MYE-DB (Option)

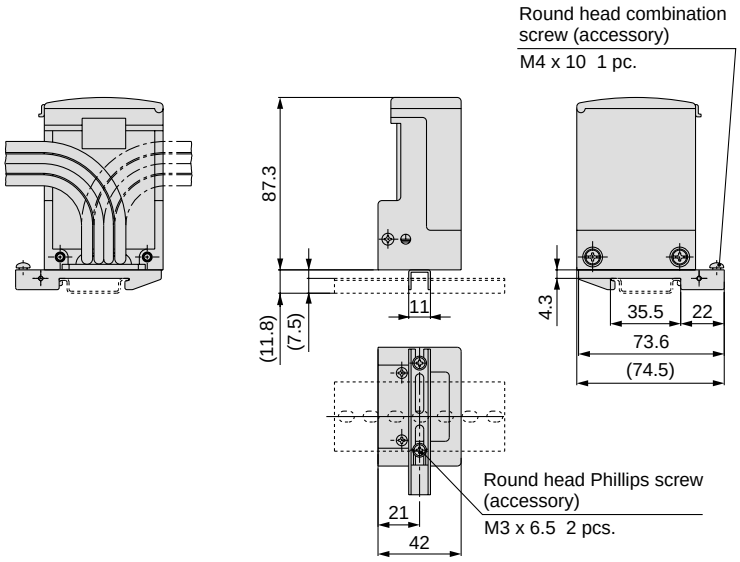

e-Rodless Actuator

Series E-MY2H

Linear Guide Single Axis Type

Nominal Size: 16, 25

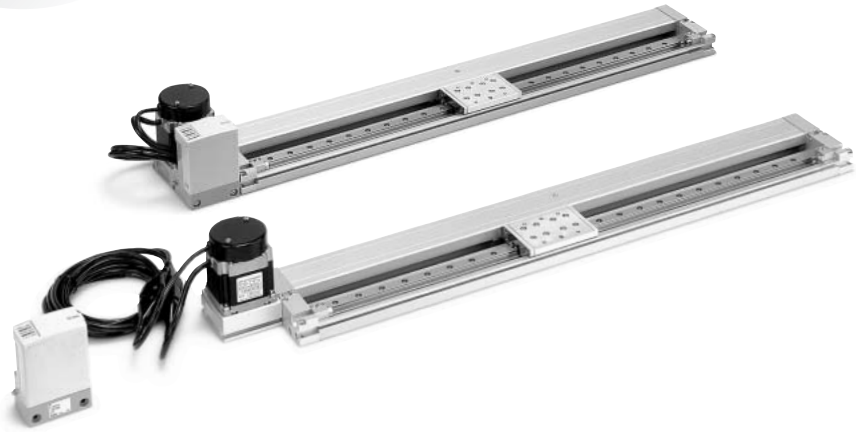

Series E-MY2HT

Linear Guide Double Axis Type

Nominal Size: 16, 25

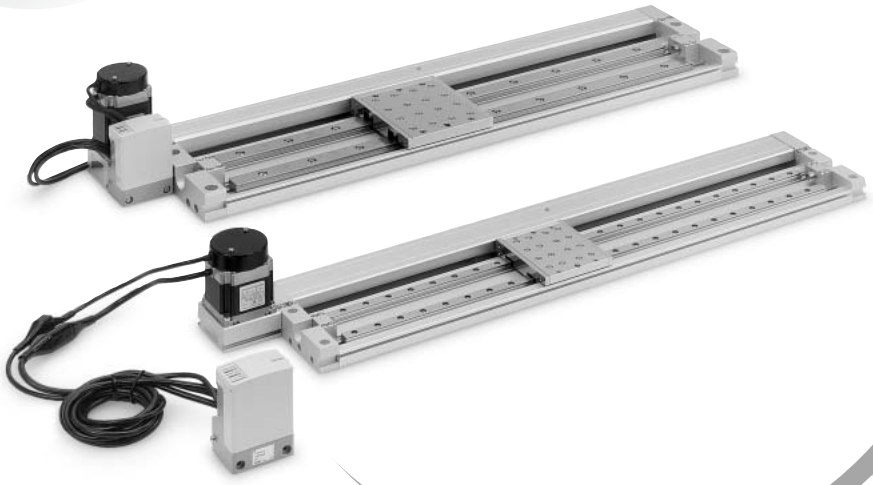

e-Rodless Actuator

Series E-MY2H/HT

Linear Guide Type / Nominal Size: 16, 25

How to Order

Integrated control type E-MY2 H 16 ☐ ☐ - 100 TA N ☐ —— M9BW ☐ —— ☐

Remote control type E-MY2 H 16 ☐ ☐ - 100 TA N ☐ M - M9BW ☐ - ☐ - ☐

Suffix for guide

H	Linear guide single axis
HT	Linear guide double axis

Nominal size

16
25

Stroke

Refer to "Standard Stroke" table.

Made to Order

(Refer to page 1133.)

Speed specifications* [mm/s]

L	Low	10 to 1000
M	Medium	50 to 1000
Nil	Standard	100 to 1000
H	High	200 to 2000

Motor placement

TA	On the top, Standard
DA	On the bottom, Standard
TB	On the top, Symmetric
DB	On the bottom, Symmetric

Output type

N	NPN
P	PNP

CE compliant

Nil	—
Q	CE marked

* No need to add a suffix for the integrated control type. It is provided with a CE compliant product.
* Noise filter is provided but not attached for the "Q" spec.

Load specifications* Work load [kg]

Symbol	Load specifications \ Nominal size	16	25
D	Light load	1.25	2.5
E	Medium load	2.5	5
Nil	Standard load	5	10
Q	Heavy load	10	20

* For details, refer to "Switch and Speed," "Switch and Acceleration" on the next page.

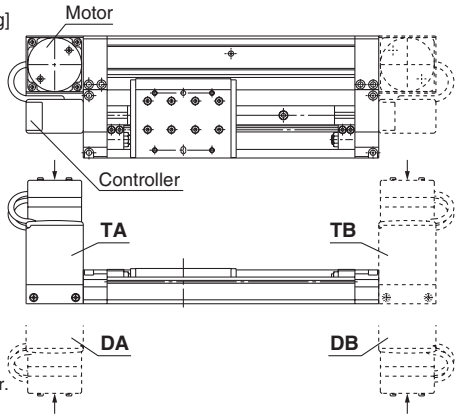

* Arrow mark shows handling side on controller.

Number of auto switches

Nil	2 pcs.
S	1 pc.
n	n

Number of stoppable positioning points

Nil	3-point stoppable type
A	5-point stoppable type

Auto switch

Nil	Without auto switch (built-in magnet)

* Refer to the table below for auto switch model numbers.

Cable length

M	1 m
L	3 m
Z	5 m

* The remote control type can be selected by adding the above symbols.

Standard Stroke

Nominal size	Standard stroke (mm)	Made to Order Long stroke (-XB11) Stroke range (mm)
16, 25	50, 100, 150, 200, 250, 300, 350, 400, 450, 500, 550, 600	601 to 1000

* Strokes are manufacturable in increments of 1 mm, up to 1000 strokes.
  However, when a stroke out of the standard 51 to 599 is required, add "-XB10" at the end of the model no.
  When stroke exceeds 600 mm, add "-XB11" at the end of model no. Refer to "Made to Order" on page 1143.
* When exceeding a 1000 strokes, refer to "Made to Order" on page 1143.

Applicable Auto Switches / For detailed auto switch specifications, refer to page 352 through to 402.

Type	Special function	Electrical entry	Indicator light	Wiring (Output)	Load voltage DC		Load voltage AC	Auto switch model: Electrical entry direction Perpendicular	In-line	Lead wire length (m)* 0.5 (Nil)	1 (M)	3 (L)	5 (Z)	Pre-wired connector	Applicable load	
Solid state switch	—	Grommet	Yes	3-wire (NPN)	24 V	5 V	—	M9NV	M9N	●	●	●	○	○	IC circuit	Relay, PLC
				3-wire (PNP)		12 V		M9PV	M9P	●	●	●	○	○		
				2-wire		12 V		M9BV	M9B	●	●	●	○	○	—	
	Diagnostic indication (2-color display)			3-wire (NPN)		5 V		M9NWV	M9NW	●	●	●	○	○	IC circuit	
				3-wire (PNP)		12 V		M9PWV	M9PW	●	●	●	○	○		
				2-wire		12 V		M9BWV	M9BW	●	●	●	○	○	—	
Reed switch	—	Grommet	Yes	3-wire (NPN equiv.)	—	5 V	—	A96V	A96	●	—	●	—	—	IC circuit	—
				2-wire	24 V	12 V	100 V	A93V	A93	●	—	●	—	—	—	Relay, PLC
			None			5 V, 12 V	100 V or less	A90V	A90	●	—	●	—	—	IC circuit	

* Lead wire length symbols: 0.5 m ····· Nil (Example) M9N
  1 m ····· M M9NWM
  3 m ····· L M9NWL
  5 m ····· Z M9NWZ
* Solid state auto switches marked "○" are produced upon receipt of order.
* For details of auto switches with pre-wired connector, refer to pages 389 and 390.
* Auto switch is shipped together, (not assembled).

Made to Order
(For details, refer to page 1143.)

Symbol	Specifications
XB10	Intermediate stroke
XB11	Long stroke
X168	Helical insert thread specifications

Mass

Actuator Unit
Unit: kg

Model	Nominal size	Basic mass	Additional mass per 50 mm stroke
E-MY2H	**16**	1.87	0.14
	25	3.37	0.23
E-MY2HT	**16**	2.30	0.21
	25	4.59	0.38

Remote Controller Unit
Unit: kg

Controller body	Cable length		
	1 m	3 m	5 m
0.24	0.09	0.24	0.39

How to calculate/Example: **E-MY2H25-300TANM**

Actuator unit

Basic mass ..... 3.37 kg
Additional mass ..... 0.23/50 st
Actuator stroke ..... 300 st
3.37 + 0.23 x 300 ÷ 50 = 4.75 kg

Remote controller unit

Controller body ..... 0.24 kg
Cable length (3 m) ..... 0.24 kg
0.24 + 0.24 = 0.48 kg

∗ For an integrated control type, add 0.24 kg (controller body) to the basic mass.

Replacement Parts

Drive Unit Replacement Part No.

Model / Nominal size	E-MY2H/HT
16	E-MY2BH16∗1- Stroke ∗2
25	E-MY2BH25∗1- Stroke ∗2

∗ Specify the speed / load specifications in ∗1 parts.
∗ Specify the motor position and output style in ∗2 parts.
For a remote control type, enter the symbol for cable length.
Example) E-MY2H16MQ-300TANAL
Drive unit replacement part no.
E-MY2BH16MQ-300TANAL

Option / Remote Controller Mounting Bracket

Description	Part no.
L-bracket	MYE-LB
DIN rail bracket	MYE-DB

Basic Specifications

Model		E-MY2H/HT			
Transfer speed set range	**Low**	10 to 1000 mm/s			
	Medium	50 to 1000 mm/s			
	Standard	100 to 1000 mm/s			
	High	200 to 2000 mm/s			
Transfer speed acceleration set range		Heavy load	Standard load	Medium load	Light load
		0.25 to 2.45 m/s²	0.49 to 4.90 m/s²	0.98 to 9.80 m/s²	1.96 to 19.6 m/s²
Maximum load mass Note)	**Nominal size: 16**	10 kg	5 kg	2.5 kg	1.25 kg
	Nominal size: 25	20 kg	10 kg	5 kg	2.5 kg
Acceleration and deceleration method		Trapezoidal drive			
Moving direction		Horizontal direction			
Repeated positioning stopping precision	**3-point stoppable type**	Both ends (Mechanical stoppers), 1 intermediate position			
	5-point stoppable type	Both ends (Mechanical stoppers), 3 intermediate positions			
Repeated positioning stopping precision	**Both ends**	± 0.01 mm			
	Intermediate stopping position	± 0.1 mm			
Allowable external resistance	**Nominal size: 16**	10 N			
	Nominal size: 25	20 N			
Intermediate stopping point positioning method		Direct teaching, JOG teaching			
Positioning setting spot		Controller body			
Display		LED for power supply, LED for alarming, LED for positioning completion			
Input signal		Actuation command signal, Emergency stop input signal			
Output signal		Positioning completion signal, Emergency detection signal, Ready signal			

Note) The maximum load mass shows the motor ability. Please consider it together with the guide load factor when selecting a model.

Electrical Specifications

Power supply for driving	**Power supply voltage**	24 VDC ± 10%
	Current consumption	Rated current 2.5 A (Max. 5 A: 2 s or less) at 24 VDC
Power supply for signals	**Power supply voltage**	24 VDC ± 10%
	Current consumption	30 mA at 24 VDC and Output load capacity
Input signal capacity		6 mA or less at 24 VDC/1 circuit (Photo coupler input)
Output load capacity		30 VDC or less, 20 mA or less/1 circuit (Open drain output)
Emergency detection items		Emergency stop, Output deviation, Power supply deviation, Driving deviation, Temperature deviation Stroke deviation, Motor deviation, Controller deviation

Environmental Specifications

Operating temperature range	**Integrated control type**		5 to 40°C
	Remote control type	**Actuator unit**	5 to 50°C
		Remote controller unit	5 to 40°C
Operating humidity range			35 to 85%RH (No condensation)
Storage temperature range			–10 to 60°C (No condensation and freezing)
Storage humidity range			35 to 85%RH (No condensation)
Withstand voltage			Between all of external terminals and the case: 500 VAC for 1 minute
Insulation resistance			Between all of external terminals and the case: 50 MΩ (500 VDC)
Noise resistance			1000 Vp-p Pulse width 1 µs, Rise time 1 ns
CE marked	**Integrated control type**		Standard
	Remote control type		Available with -Q suffixed products only (Option)

Speed / Acceleration

Switch and Speed Note 1) [mm/s]

Switch no.	Low speed	Medium speed	Standard speed	High speed
1	10	50	100	200
2	20	75	200	400
3	30	100	300	600
4	40	125	400	800
5	50	150	500	1000
6	75	200	600	1200
7	100	250	700	1400
8	300	300	800	1600
9	500	500	900	1800
10	1000	1000	1000	2000

Switch and Acceleration Note 2) [m/s²]

Switch no.	Heavy load	Standard load	Medium load	Light load
1	0.25	0.49	0.98	1.96
2	0.49	0.74	1.47	2.94
3	0.74	0.98	1.96	3.92
4	0.98	1.23	2.45	4.90
5	1.23	1.47	2.94	5.88
6	1.47	1.96	3.92	7.84
7	1.72	2.45	4.90	9.80
8	1.96	2.94	5.88	11.76
9	2.21	3.92	7.84	15.68
10	2.45	4.90	9.80	19.60

Note 1) The factory default setting for the switch is No.1.
Note 2) The factory default setting for the switch is No.1.

Dimensions: Integrated Control Type

E-MY2H Nominal size – Stroke

Nominal size: 16

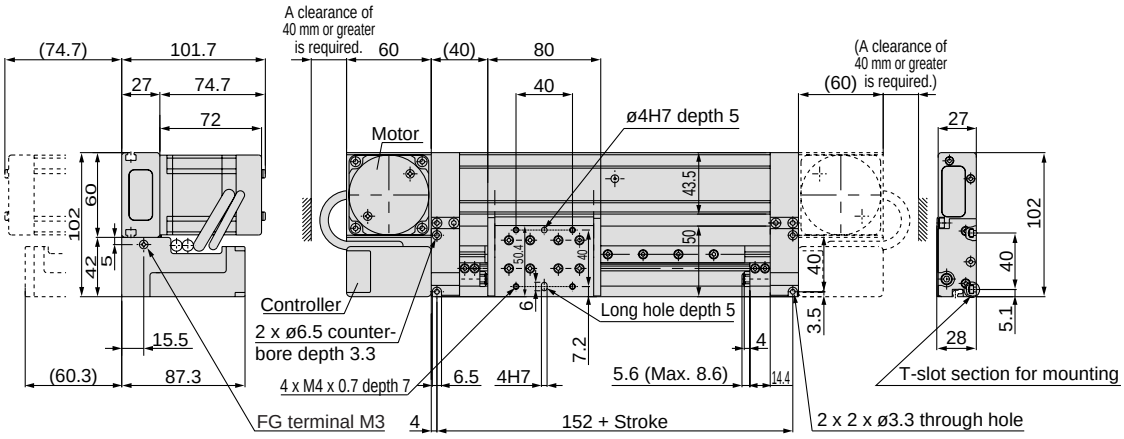

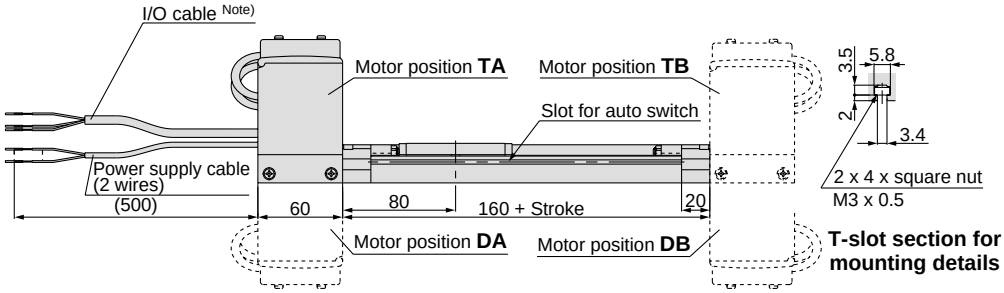

Nominal size: 25

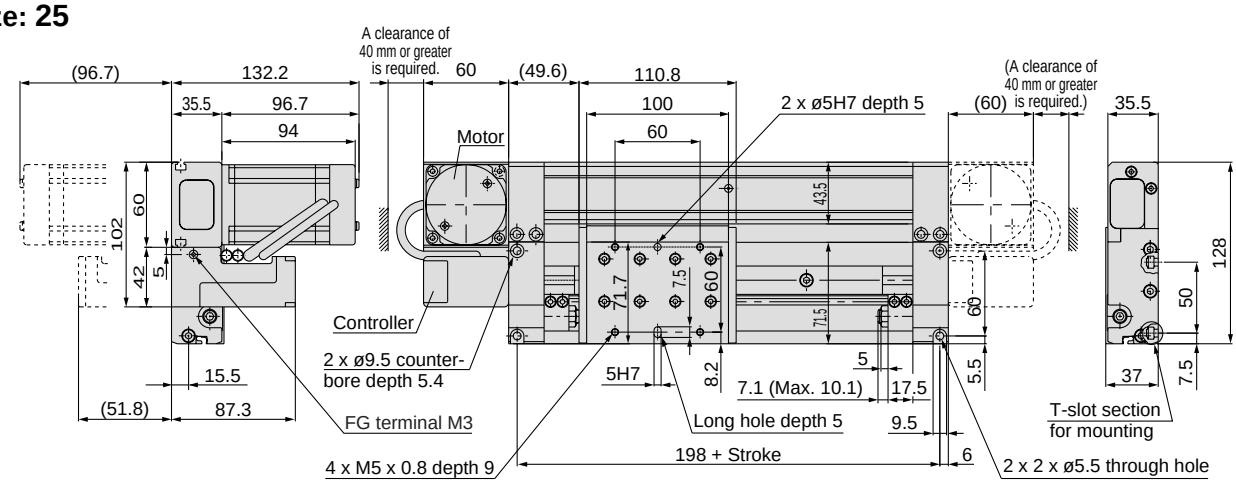

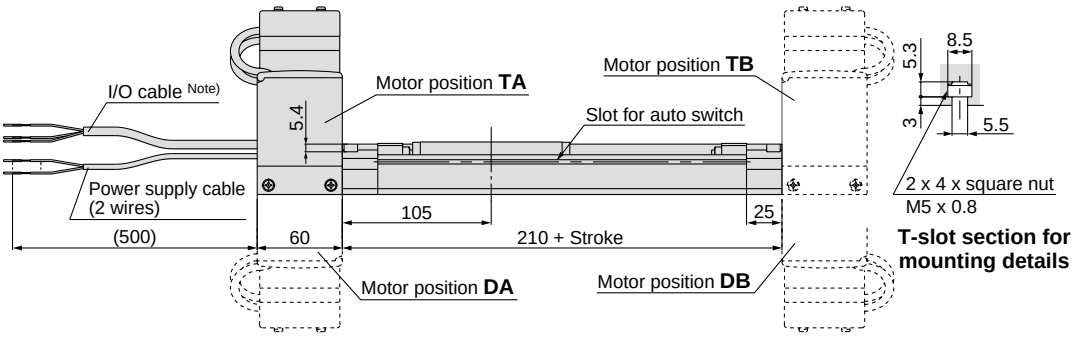

Note) For the 3-point stoppable type, the I/O cable is a 9-core type and for the 5-point stoppable type, a 11-core type is used.

Dimensions: Remote Control Type (Actuator unit)

E-MY2H Nominal size – Stroke □□ M L Z

∗ Refer to page 1138 for dimensions of remote controller.

Nominal size: 16

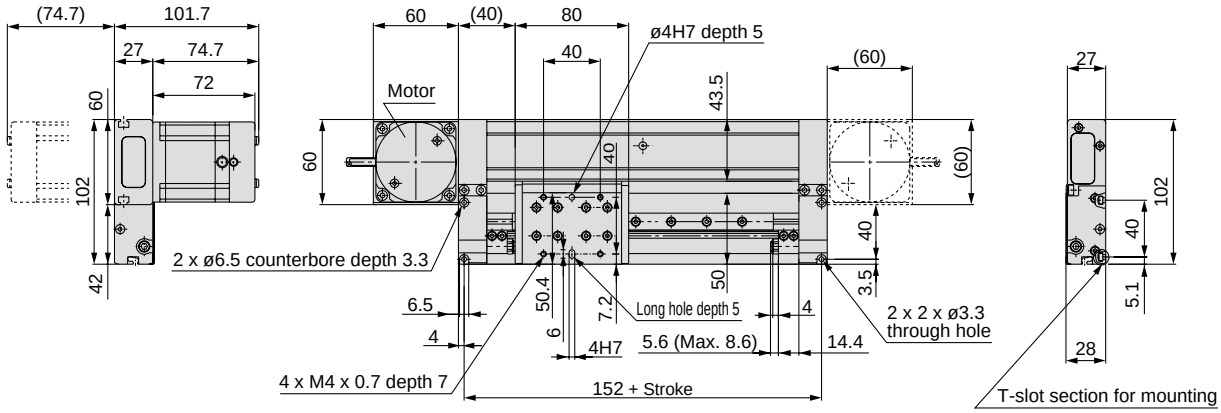

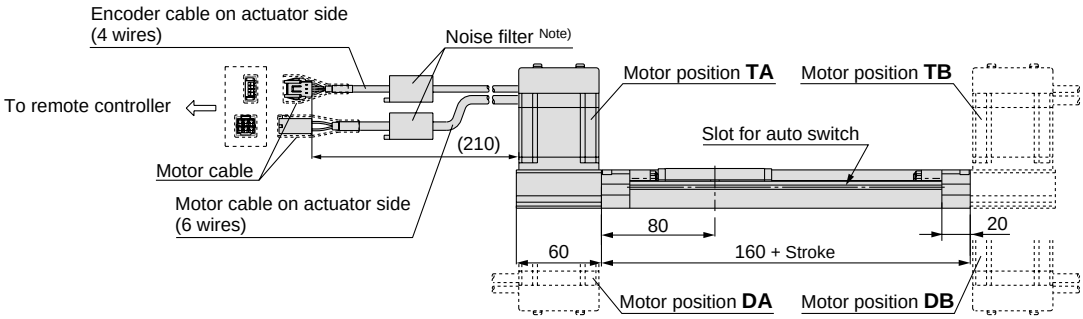

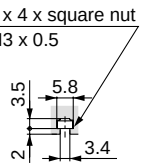

T-slot section for mounting details

Nominal size: 25

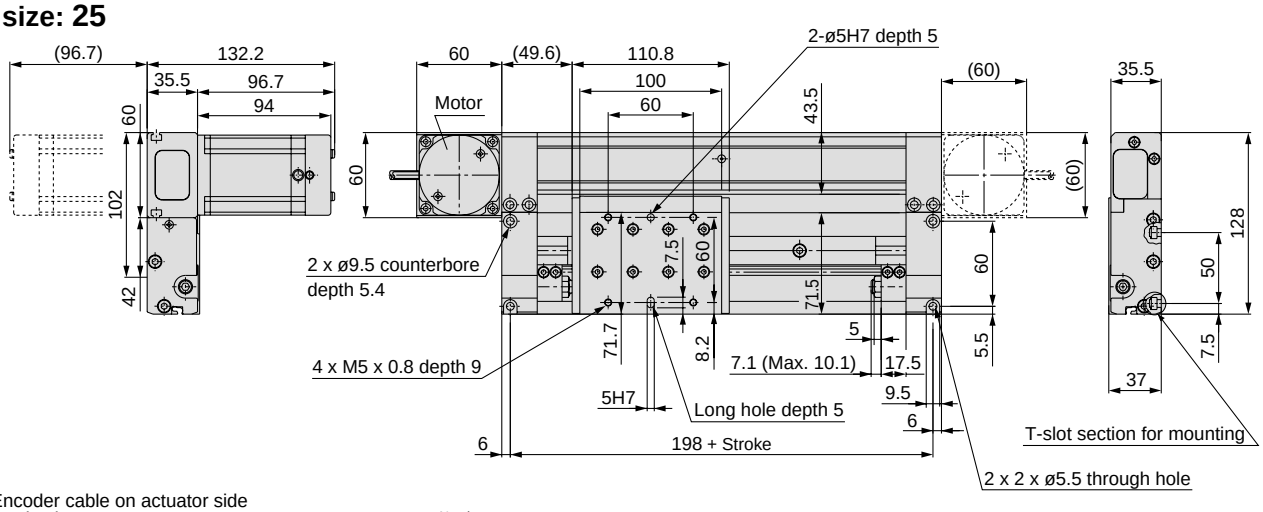

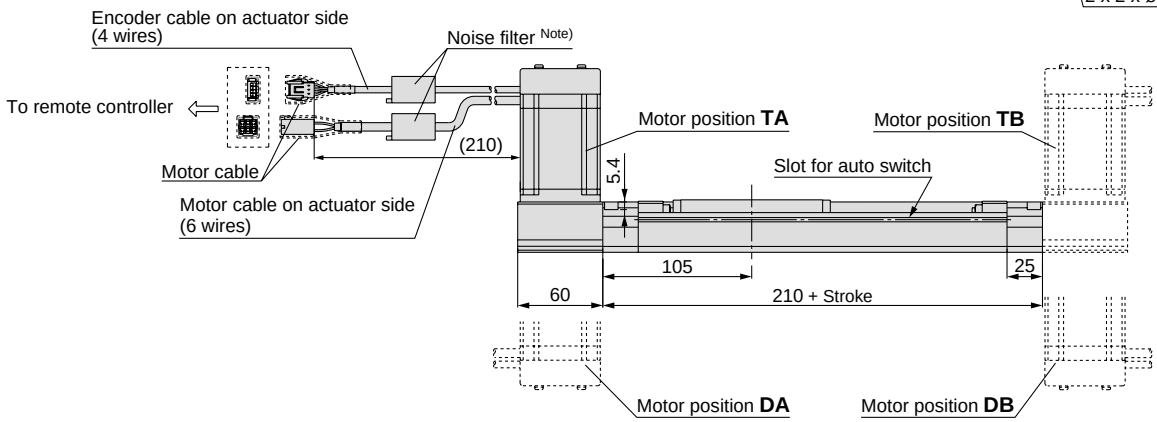

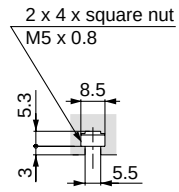

T-slot section for mounting details

Note) When the CE compliant model is selected, a noise filter is provided but not attached.
The cable for the CE compliant models uses the dedicated shielding. Even if a noise filter is attached to a non CE marked products, the products cannot be changed to a CE compliant product.

Dimensions: Integrated Control Type

E-MY2HT Nominal size – Stroke

Nominal size: 16

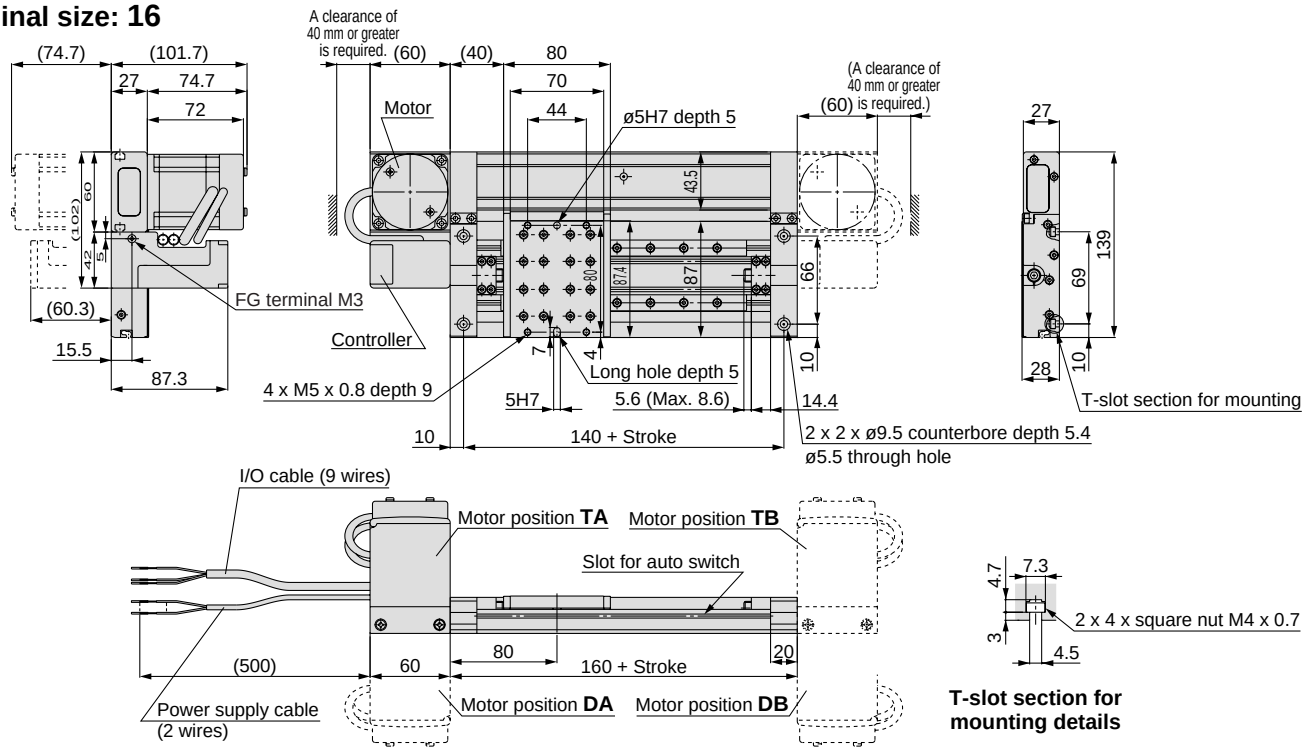

Nominal size: 25

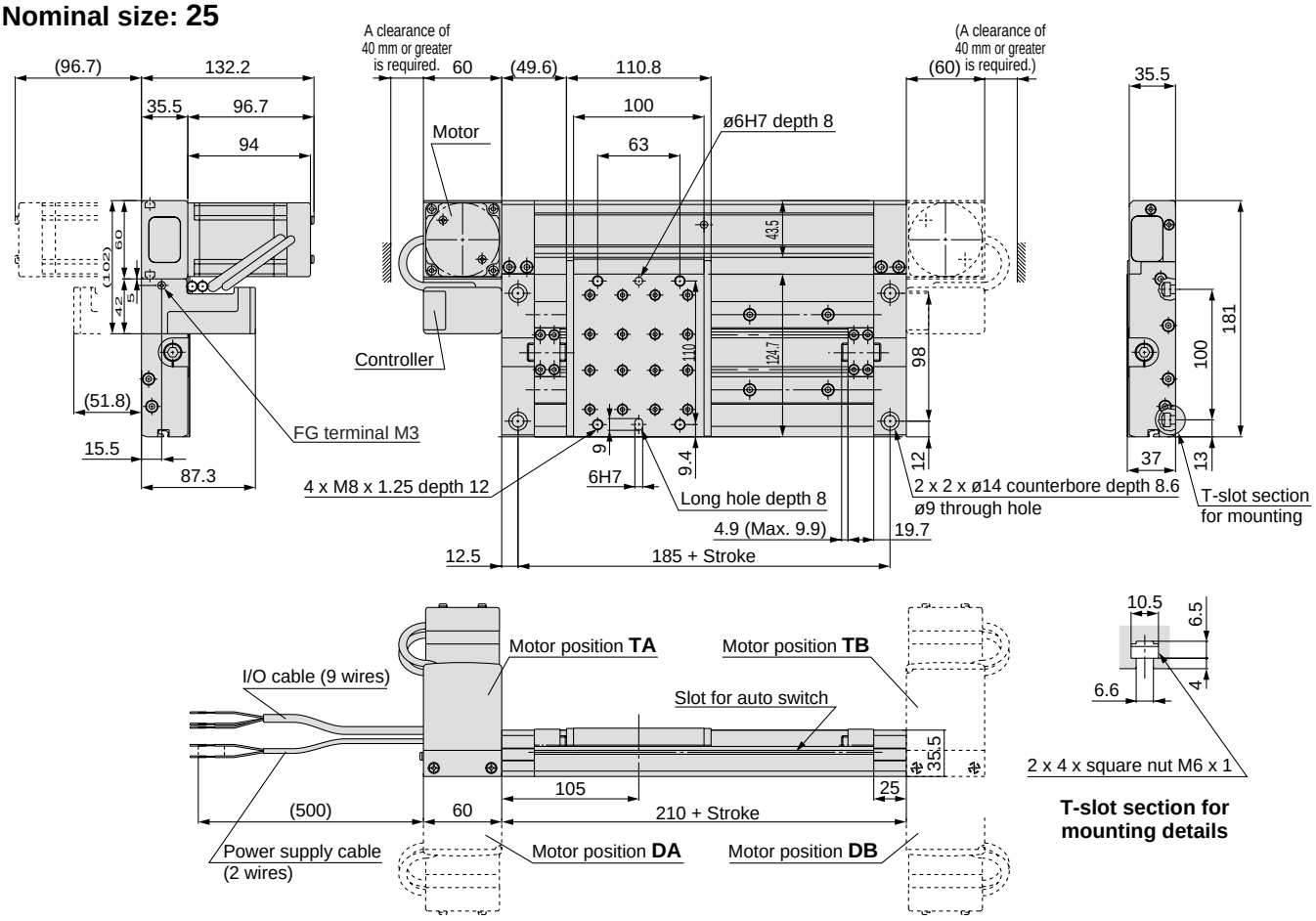

Note) For the 3-point stoppable type, the I/O cable is a 9-core type and for the 5-point stoppable type, a 11-core type is used.

Dimensions: Remote Control Type (Actuator unit)

E-MY2HT Nominal size – Stroke □□ M L Z

∗ Refer to page 1138 for dimensions of remote controller.

Nominal size: 16

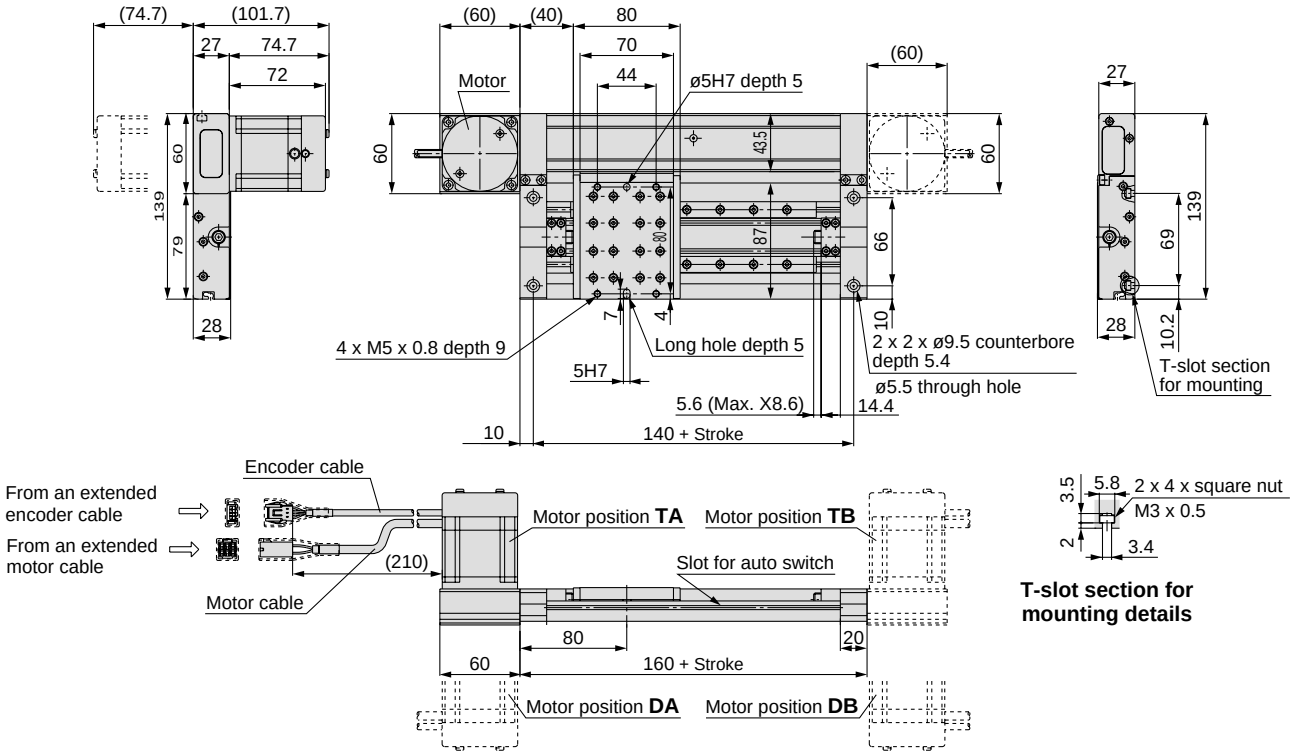

Nominal size: 25

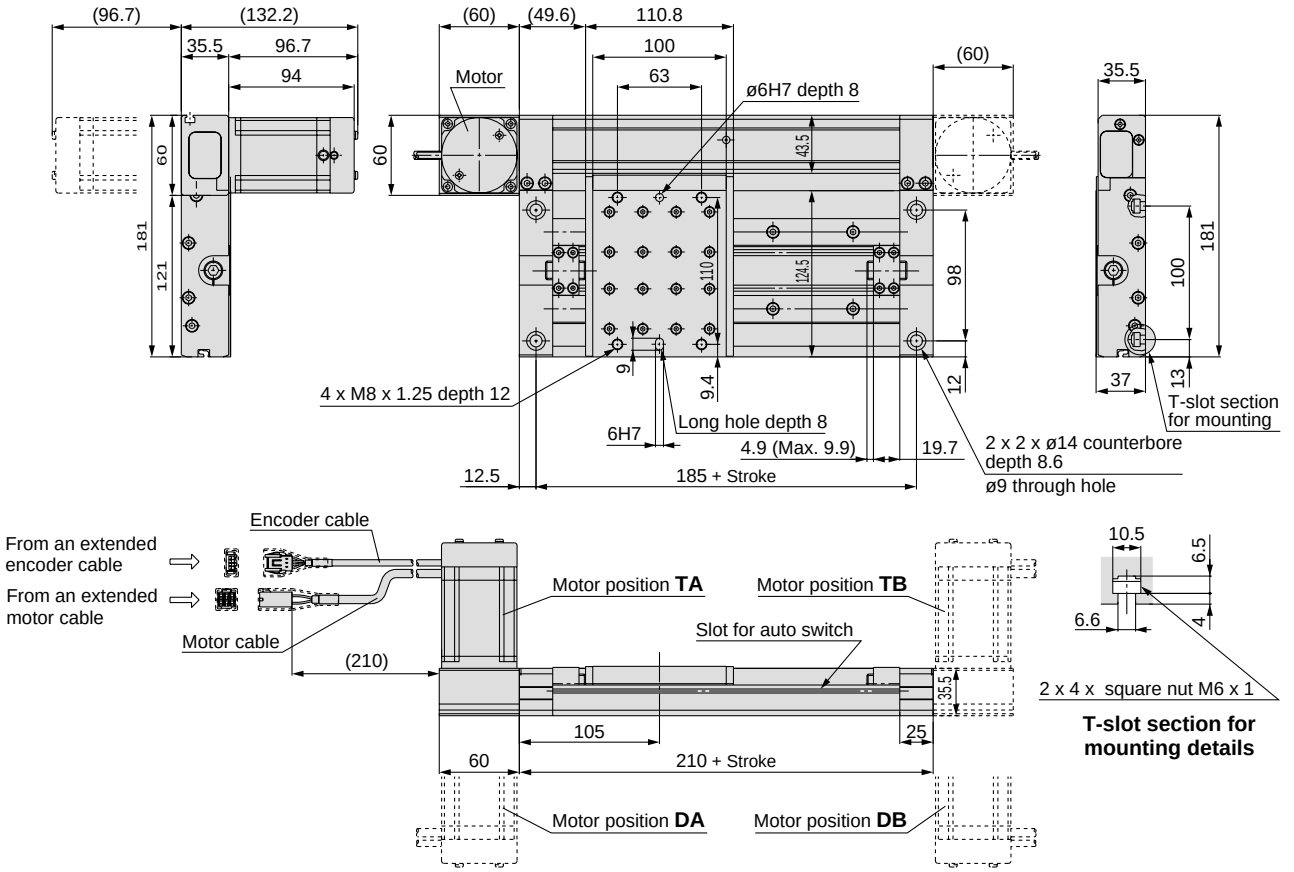

Note) When the CE compliant model is selected, a noise filter is provided but not attached.
The cable for the CE compliant models uses the dedicated shielding. Even if a noise filter is attached to a non CE marked products, the products cannot be changed to a CE compliant product.

Dimensions: Remote Control Type (Remote controller unit)

Controller

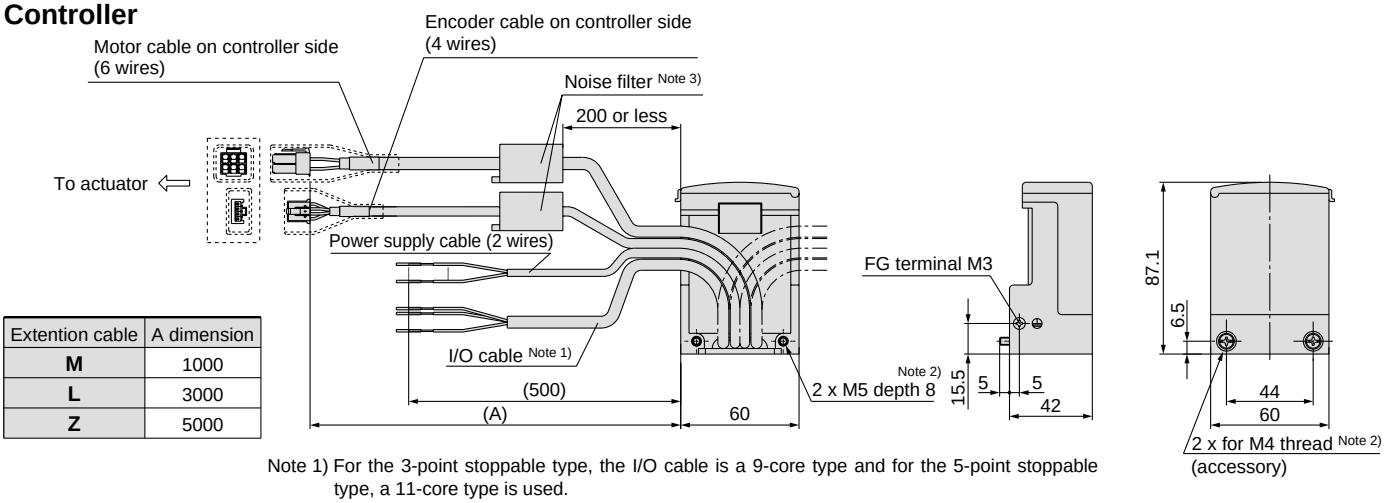

Extention cable	A dimension
M	1000
L	3000
Z	5000

Note 1) For the 3-point stoppable type, the I/O cable is a 9-core type and for the 5-point stoppable type, a 11-core type is used.
Note 2) When mounting the remote controller, use the included M4 screw or use the M5 tap located on one side of the controller.
Note 3) When the CE compliant model is selected, a noise filter is provided but not attached.
The cable for the CE compliant models uses the dedicated shielding. Even if a noise filter is attached to a non CE marked product, the product cannot be changed to a CE compliant product.

L-bracket / MYE-LB (Option)

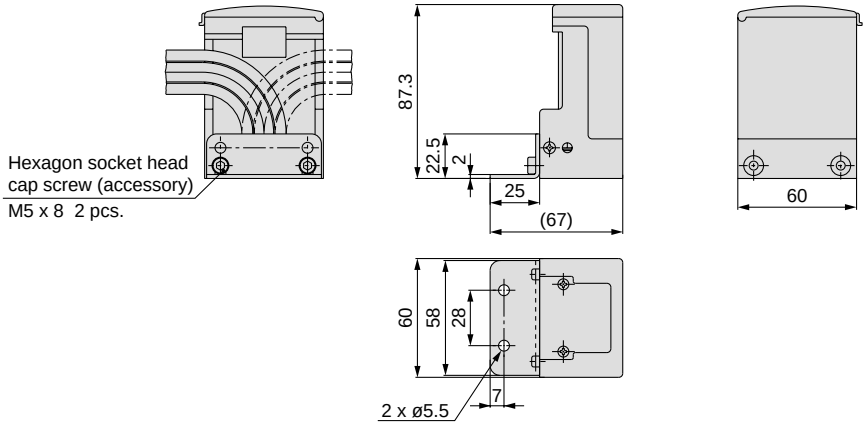

DIN rail bracket / MYE-DB (Option)

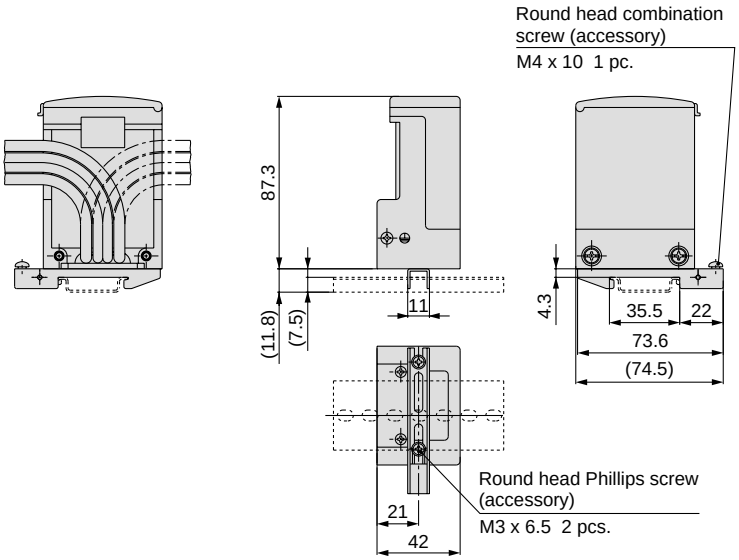

Auto Switch Proper Mounting Position at Stroke End Detection

Note) The operating range is a guideline including hysteresis, not meant to be guaranteed. There may be large variations (as much as ±30%) depending on the ambient environment.

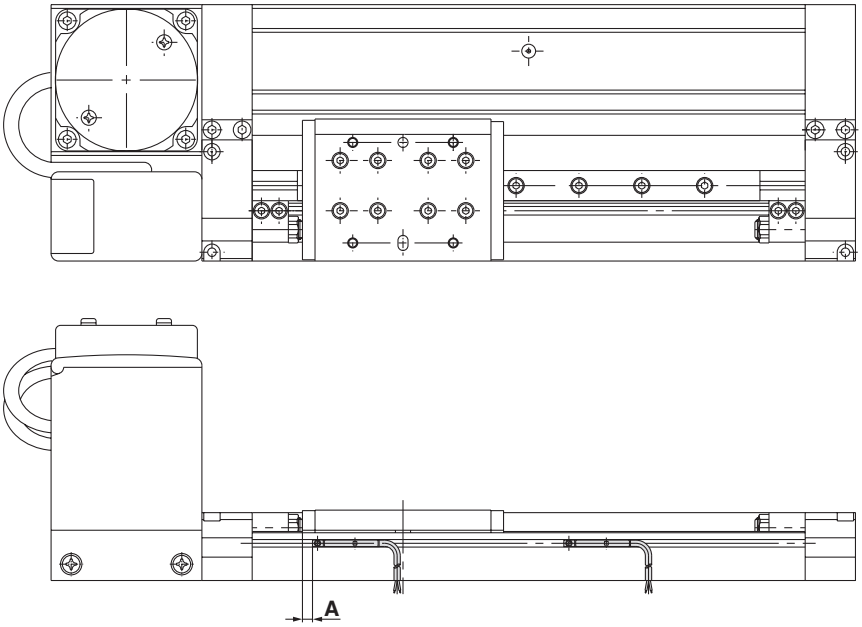

D-A9, D-A9□V (mm)

Model	Nominal size	A	Operating range
E-MY2C	**16**	4	8.5
E-MY2H		6	
E-MY2HT		30	
E-MY2C **E-MY2H** **E-MY2HT**	**25**	4.4	

D-M9, D-M9□V
D-M9□W, D-M9□WV (mm)

Model	Nominal size	A	Operating range
E-MY2C	**16**	8	6
E-MY2H		10	
E-MY2HT		34	
E-MY2C **E-MY2H** **E-MY2HT**	**25**	8.4	9

Auto Switch Mounting

When mounting the auto switches, they should be inserted into the actuator's auto switches mounting groove from the direction shown in the drawing on the right. Once in the mounting position, use a flat head watchmaker's screwdriver to tighten the included auto switch mounting screw.

Note) When tightening the auto switch mounting screw, use a watchmaker's screwdriver with a handle diameter of about 5 to 6 mm. The tightening torque should be 0.1 to 0.2 N•m.

Auto Switch Mounting Screw Tightening Torque (N·m)

Auto switch model	Tightening torque
D-A9□(V)	0.10 to 0.20
D-M9□(V) **D-M9□W(V)**	0.10 to 0.15

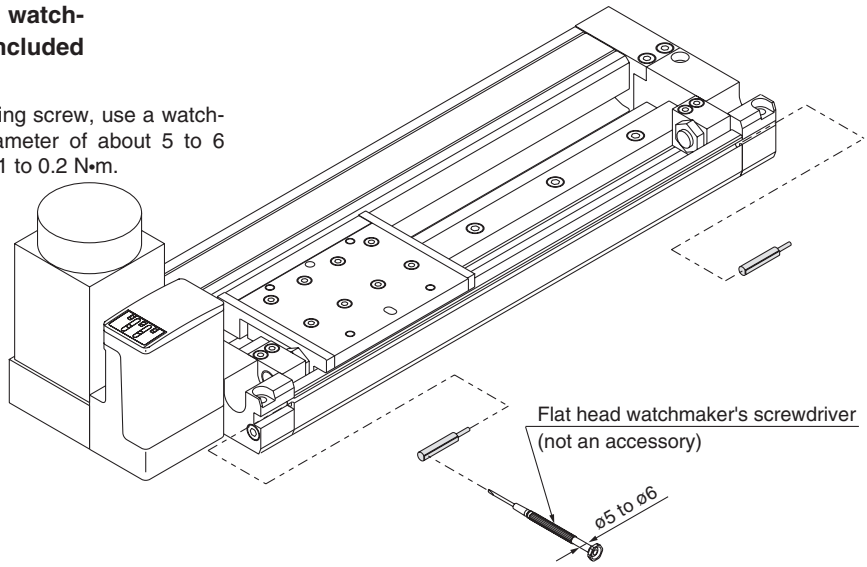

Names and Functions of Individual Part

Integrated control type

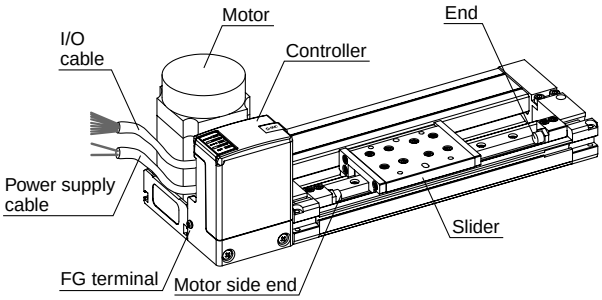

Remote control type

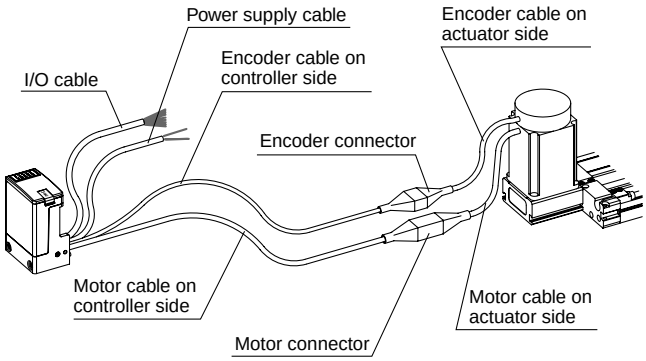

Description	Contents/Functions
Slider	Moving part within the actuator
Motor	Motor activating the actuator
Power supply cable	Power supply cable for providing power to the actuator
I/O cable	I/O cable for transmitting a positioning completion signal and driving instructions
Controller unit	The unit to control and set the actuator, and indicate its status
FG terminal	The terminal to connect the FG cable
Encoder cable on actuator side	Encoder cable for connecting the actuator with the controller
Motor cable on actuator side	Motor cable for connecting the actuator with the controller
Encoder cable on controller side	Encoder cable for separating the controller
Motor cable on controller side	Motor cable for separating the controller

Controller detail

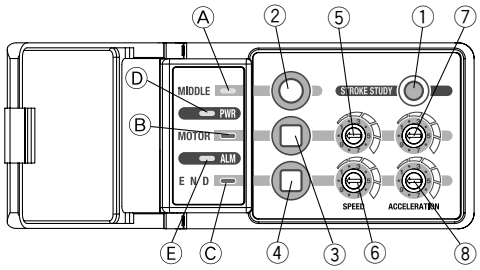

Switch

Description	Contents/Functions
1	Stroke learning switch
2 to 4	Switch to move the actuator to intermediate position and set the intermediate position
5	Rotary switch to set moving speed to the motor side end
6	Rotary switch to set moving speed to the other end
7	Rotary switch to set moving acceleration to the motor side end
8	Rotary switch to set moving acceleration to the other end

Indicator Light and the Display for the Basic Functions

Symbol	Description	Power supply ON	Actuation instruction					When decelerated and completely stopped *1	When the alarm is activated.
			Motor side	End side	*1 Intermediate 1	*1 Intermediate 2	*1 Intermediate 3		
A	MIDDLE Indicator light (Green)	—	—	—	○	○	○	—	*2
B	MOTOR Indicator light (Green)	—	○	—	—	○	—	○	
C	END Indicator light (Green)	—	—	○	—	—	○	○	
D	PWR Indicator light (Green)	○	○	○	○	○	○	○	○
E	ALM Indicator light (Red)	—	—	—	—	—	—	—	○

○ indicates on status, and — indicates off status.
*1) Displays for the 5-point stoppable type only.
*2) When the alarm is activated, see page 1142 for the ALM display.

Internal Circuits and Wiring Examples

3-point Stoppable Type

Power Supply Cable 2-core AWG20 (20 wires/0.16 mm²)

Symbol	Color	Signal name	Contents
DC1 (+)	Brown	Vcc	Power supply cables for driving the actuator
DC1 (–)	Blue	GND	

I/O Cable 9-core AWG28 (7 wires/0.127 mm²)

Symbol	Color	Signal name	Contents
DC2 (+)	Brown	Vcc	Power supply cables for signal
DC2 (–)	Blue	GND	
OUT1	Pink	READY output	Signal indicating the controller is operationable
OUT2	Orange	Positioning completion output 1	Signal indicating that positioning is completed
OUT3	Yellow	Positioning completion output 2	
OUT4	Green	Alarm output	Signal indicating an alarm has been generated
IN1	Purple	Actuation instruction input 1	Instruction signal to actuator
IN2	Gray	Actuation instruction input 2	
IN3	White	Emergency stop	Signal providing emergency stop instruction (The emergency stop is activated when contact is opened)

This product can be used without connecting I/O cables, however please use caution and install a power supply switch for the actuator. In case of an emergency, please turn it off.

NPN input/output circuit

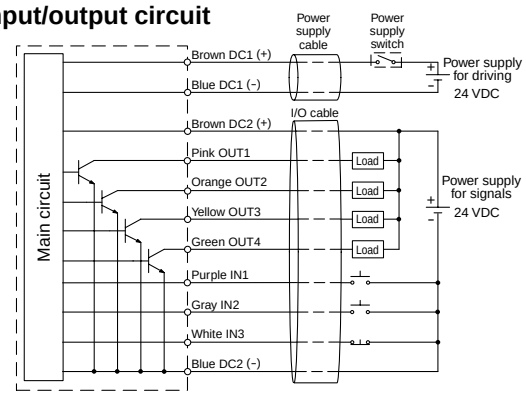

PNP input/output circuit

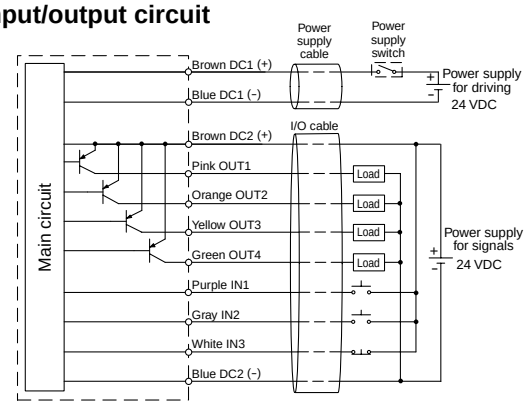

I/O Cable Signals

Input signal

Command	Symbol	
	IN1	IN2
Motor side actuation instruction	○	—
End side actuation instruction	—	○
Intermediate actuation instruction	○	○

Output signal

Actuator status	Symbol		
	OUT1	OUT2	OUT3
Completion of motor side end positioning	○	○	—
Completion of end positioning	○	—	○
Completion of intermediate positioning	○	○	○

○ indicates on status, and — indicates off status.

5-point Stoppable Type

Power Supply Cable 2-core AWG20 (20 wires/0.16 mm²)

Symbol	Color	Signal name	Contents
DC1 (+)	Brown	Vcc	Power supply cables for driving the actuator
DC1 (–)	Blue	GND	

I/O Cable 11-core AWG28 (7 wires/0.127 mm²)

Symbol	Color	Signal name	Contents
DC2 (+)	Brown	Vcc	Power supply cables for signal
DC2 (–)	Blue	GND	
OUT1	Pink	READY output	Signal indicating the controller is operationable
OUT2	Orange	Positioning completion output 1	Signal indicating that positioning is completed
OUT3	Yellow	Positioning completion output 2	
OUT4	Red	Positioning completion output 3	
OUT5	Green	Alarm output	Signal indicating an alarm has been generated
IN1	Purple	Actuation instruction input 1	Instruction signal to actuator
IN2	Gray	Actuation instruction input 2	
IN3	Black	Actuation instruction input 3	
IN3	White	Emergency stop	Signal providing emergency stop instruction (The emergency stop is activated when contact is opened)

This product can be used without connecting I/O cables, however please use caution and install a power supply switch for the actuator. In case of an emergency, please turn it off.

NPN input/output circuit

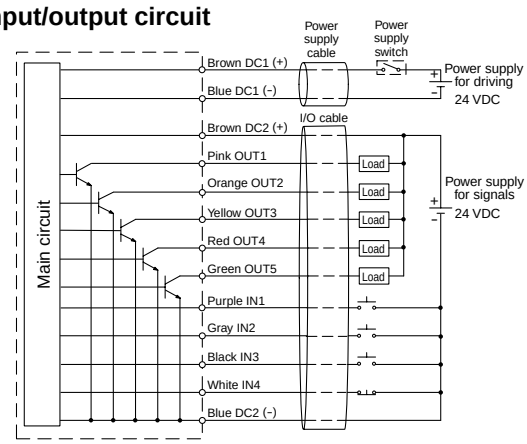

PNP input/output circuit

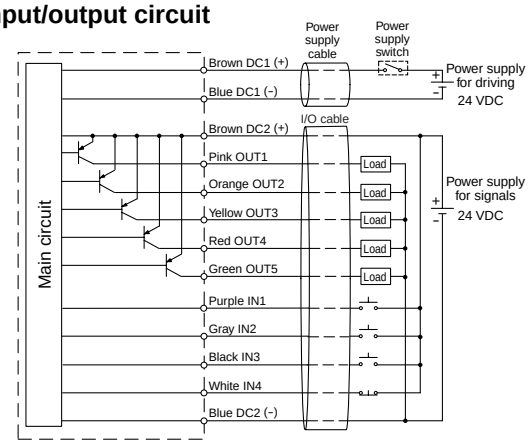

I/O Cable Signals

Input signal

Command	Symbol		
	IN1	IN2	IN3
Motor side actuation instruction	○	—	—
End side actuation instruction	—	○	—
Intermediate actuation instruction 1	—	—	○
Intermediate actuation instruction 2	○	—	○
Intermediate actuation instruction 3	—	○	○
External input stop instruction	○	○	—

Output signal

Actuator status	Symbol			
	OUT1	OUT2	OUT3	OUT4
Completion of motor side end positioning	○	○	—	—
Completion of end positioning	○	—	○	—
Completion of intermediate 1 positioning	○	—	—	○
Completion of intermediate 2 positioning	○	○	—	○
Completion of intermediate 3 positioning	○	—	○	○
Completion of external input stop	○	○	○	—

○ indicates on status, and — indicates off status.

Error Display and Problem Solving

When the error indicator is displayed, refer to the following instructions.

Light OFF Blinks Light ON

Item	Display	Contents	Solution
Emergency stop	MIDDLE, PWR, MOTOR, ALM, END	Either the emergency stop input is opened, or the power supply for the signal is cut-off.	Confirm the power supply signal is energized and release the emergency stop input. (Refer to the circuit diagram on page 1141.)
Abnormal external output	MIDDLE, PWR, MOTOR, ALM, END	External output is short-circuited. ∗ There is no external output signal.	In case of common power supply, turn off the power supply and check the wiring condition of load. Restart the power supply. (Refer to the circuit diagram on page 1141.)
			In case of an independent power supply, turn off the power supply for the signals and check the wiring condition of load. Restart the power supply. (Refer to the circuit diagram on page 1141.)
Power supply abnormality	MIDDLE, PWR, MOTOR, ALM, END	The power supply voltage is excessive or lower than the limit for operation.	Check the power supply voltage and adjust it if necessary, then press the MIDDLE button.
Drive abnormality	MIDDLE, PWR, MOTOR, ALM, END	Maximum output is continued for a prolonged period of time.	Check the work weight and confirm that no foreign materials are attached to the actuator. After confirming, press the MIDDLE button.
Temperature abnormality	MIDDLE, PWR, MOTOR, ALM, END	Internal temperature of the controller is high.	Lower the surrounding temperature of the actuator in use, and then press the MIDDLE button.

Item	Display	Contents	Solution
Abnormal stroke	MIDDLE, PWR, MOTOR, ALM, END	The motor is revolving at excessive speed or stops before target is achieved.	If any foreign materials are observed, remove them and then press the MIDDLE button.
			Check to see whether the stroke adjusting unit is loose. If required, re-adjust the stroke and perform the stroke learning again. Note 1)
			In case of using the remote controller type, please confirm the connection of the connector part between the motor and the controller, after turning off the power supply.
Motor abnormality	MIDDLE, PWR, MOTOR, ALM, END	The motor does not revolve properly or over current is detected.	Press the MIDDLE button.
			In case of using the remote controller type, please confirm the connector part between the motor and the controller after cutting off the power supply.
Controller abnormality	MIDDLE, PWR, MOTOR, ALM, END	The CPU is malfunctioning or the memory content is abnormal.	Turn off the power supply and restart it.
Error of the set value	MIDDLE, PWR, MOTOR, ALM, END	The switch settings for speed and acceleration have been changed while in a locked condition. ∗ There is no external output signal.	Reset the settings for speed and acceleration to the set values while in a locked condition.

Note 1) The product is in the same condition as when the stroke learning process is completed.
Return to the home position is not performed by the initial input

- If the error can not be corrected, turn off the power supply to stop operation, and contact your SMC sales representative.

Alarm reset

There are two types of alarm reset: alarm reset manually (a) and an alarm reset externally (b) by an external signal.

a: Alarm reset manually

In the event of an alarm, simply pushing (2) will revert from the alarm state.

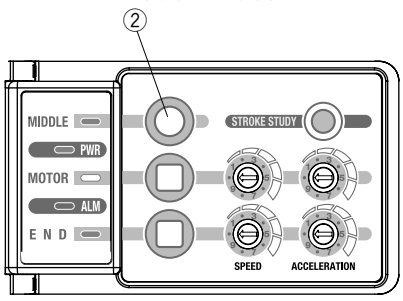

b: Alarm reset externally

In the event of an alarm, simply inputting an external emergency stop signal for 50 ms or longer will return to the state prior to the alarm. The emergency stop output will activate by releasing the input for the emergency stop.

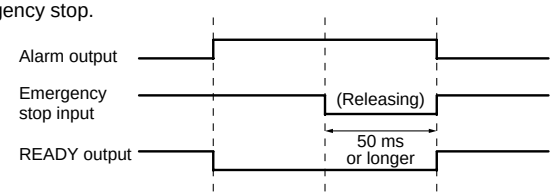

The followings are the reinstated condition.

- The slider will be free until the command for driving is applied.
- After being reverted, the next input command for driving makes it start. The initial motion after being reverted is 50 mm/s of a traveling speed.

Made to Order Specifications:

Please consult with SMC for detailed dimensions, specifications and delivery.

Made-to-Order Application List

		Intermediate stroke XB10	Long stroke XB11	Helical insert thread X168
E-MY2C	Cam follower guide type	Can be adjusted on a regular basis	Can be adjusted on a regular basis	●
E-MY2H	Linear guide single axis type	●	●	●
E-MY2HT	Linear guide double axis type	●	●	●

1 Intermediate Stroke XB10

Within the standard stroke range, the stroke length in the middle range can be adjusted by 1 mm increments. (The intermediate stroke is available as a standard spec with the E-MY2C.)

■ Stroke range: 51 to 599 mm

E-MY2H Refer to the standard model no. on page 1132 **−XB10**

Example) E-MY2H25-599TAN-M9B-XB10

2 Long Stroke XB11

Available with long strokes exceeding the standard stroke range.
The stroke length can be adjusted by 1 mm increments. (The E-MY2C is available with an up to 1,000-mm stroke as a standard spec.)

■ Stroke range: 601 to 1000 mm

E-MY2H Refer to the standard model no. on page 1132 **−XB11**

Example) E-MY2H25-999TAN-M9B-XB11

3 Helical Insert Thread Specifications X168

The mounting threads of the slider are changed to helical insert threads. The thread size is standard size.

E-MY2 Refer to the standard model no. on page 1126, 1132 **−X168**

Example) E-MY2H25-300TAN-M9B-X168

Others: Made to Order / For detail, please contact SMC.

● 6-point stoppable type

Stoppable at both ends (2-point) and at intermediate strokes (4-point)

● Max. manufacturable stroke

Stroke exceeding 1000 mm is available.

Nominal size	E-MY2C	E-MY2H	E-MY2HT
16	2000	1000	1000
25	2000	1500	1500

Maximum thrust is reduced depending on the stroke.
Max. thrust = Max. payload x Max. acceleration

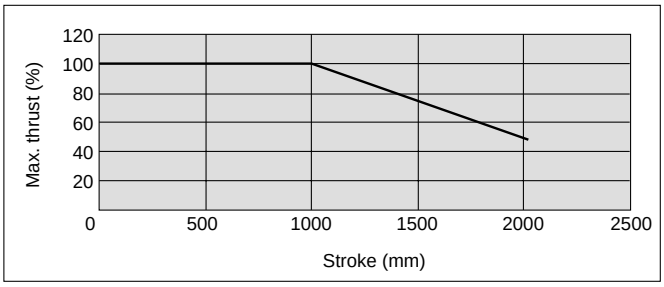

Series E-MY2
e-Rodless Actuators Precautions 1

Be sure to read before handling.

Design and Selection

⚠ Warning

1. Conduct operation at regulated voltage.

The product may not function correctly or the controller section may be damaged if used with any other voltage than the specified regulated voltage. If the regulated voltage is low, the load may not operate due to internal voltage drop of the controller section. Check and confirm the operating voltage before using.

2. Do not use a load that is over the maximum load volume.

The controller section may be damaged.

3. Operate within the limit of the specification range.

If operated outside of the specification range, there is a possibility of fire, malfunction, and or actuator damage. Operate after confirming the required specifications.

4. To prevent any damage by product failure or malfunction, plan and construct a backup system beforehand, such as multiplexing the components and equipment, employing failure free planning, etc.

5. Provide enough space for maintenance.

When planning, consider the space required for product checkup and maintenance.

6. Provide a protective cover when there is a risk of human injury.

If a driven object and or moving parts of a cylinder pose a danger to human injury, design the structure to avoid contact with the human body.

7. Securely tighten all mounting parts and connecting parts of the actuator to prevent them from becoming loose.

In particular, when a cylinder operates at a high frequency, or is installed where there is excessive vibration, ensure that all parts remain secure.

8. Do not apply more load than stipulated by the spec.

[kg]

Nominal size \ Load spec.	Heavy load	Standard load	Medium load	Light load
16	10	5	2.5	1.25
25	20	10	5	2.5

9. The resistance value of the attached equipment should be within the allowable external resistance value.

⚠ Caution

1. The direct-current power supply to combine should be UL authorized power supply.

(1) Limited voltage current circuit in accordance with UL508.
A circuit in which power is supplied by the secondary coil of a transformer that meets the following conditions.
- Maximum voltage (with no load):
  30 Vrms (42.4 V peak) or less
- Maximum current:
  (1) 8 A or less (including when short circuited)
  (2) limited by circuit protector (such as fuse) with the following ratings.

No load voltage (V peak)	Max. current rating
0 to 20 [V]	5.0
Above 20 to 30 [V]	100 / Peak voltage

(2) A circuit using max. 30 Vrms or less (42.4 V peak), which is powered by UL1310 or UL1585 compatible Class-2 power supply.

Mounting

⚠ Caution

1. Do not drop, strike, or apply excessive shock to the actuator.

The actuator could be damaged, resulting in its failure and or malfunction.

2. Hold the body when handling.

The actuator could be damaged, resulting in its failure and or malfunction.

3. Keep tightening torque.

If tightened beyond the specified range, damage may occur. In addition, if tightened below the specified range, the actuator installation position may shift to some extent.

4. Do not install the actuator in a location used as a scaffold for work.

By stepping on the actuator, the actuator may receive excessive load weight which may damage it.

5. Provide a flat surface for installing the actuator and workpiece. The degree of surface flatness should be determined by the machine precision requirement, or its corresponding precision.

Keep actuator mounting surface flatness within 0.1/500 mm. The degree of surface flatness for mounting a workpiece should be within 0.02 mm.

6. Attaching and detaching the cylinder body

To remove the cylinder body, remove the four cylinder holding bolts and remove the cylinder from the guide unit. To install the cylinder, insert its slider into the slide table on the guide unit and equally tighten the four holding bolts. Tighten the holding bolts securely because if they become loose, problems may occur such as damage, malfunction, etc.

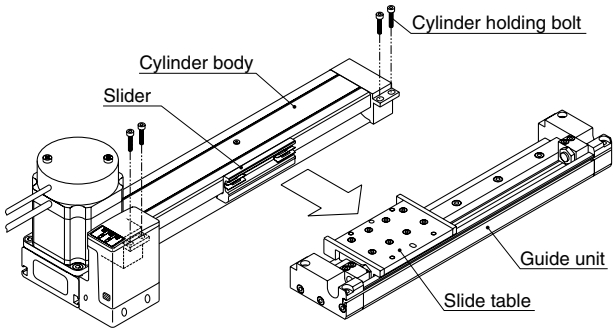

7. Workpiece mounting

When mounting a magnetic workpiece, keep a clearance of 5 mm or greater between the auto switch and the workpiece. Otherwise, the magnetic force within the cylinder may be lost, resulting in malfunction of the auto switch.

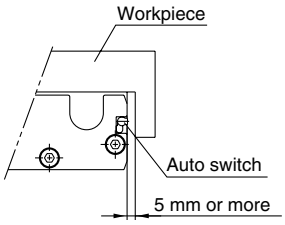

Wiring

⚠ Warning

1. Avoid repeatedly bending and/or stretching the cables.

Repeatly applying bending stress and stretching force to the cables may result in broken lead wires.

Series E-MY2
e-Rodless Actuators Precautions 2

Be sure to read before handling.

Wiring

⚠ Warning

2. Avoid incorrect wiring.
Depending on the type of incorrect wiring, the controller section may be damaged.

3. Perform wiring when the power is off.
The controller section may be damaged and malfunction.

4. Do not wire with power lines or high voltage lines.
Conduct wiring for controller separately from power lines or high voltage lines to avoid interference from the noise or surge from the signal lines of the power lines or high voltage lines. This may result in malfunction.

5. Confirm that the wiring is properly insulated.
Be certain that there is no faulty wiring insulation (contact with other circuits, improper insulation between terminals, etc.) because the controller may be damaged due to excessively applied voltage or current flow to the controller section.

6. Be sure to attach a noise filter when a remote control type, CE compliant product is used.
Using without a noise filter will be a non-CE compliant product.

Operating Environment

⚠ Warning

1. Do not use in a place where the product may come in contact with dust, particles, water, chemicals and oil.
It may cause damage and malfunction.

2. Do not use in a place where a magnetic field is present.
It may cause malfunction to the actuator.

3. Do not use the product in the presence of flammable, explosive or corrosive gas.
It may cause fire, explosion, and corrosion.
The actuator does not have an explosion proof construction.

4. Do not use in an environment subjected to temperature cycle.
If used in an environment where temperature cycling occurs, other than the usual temperature change, the internal controller may be adversely effected.

5. Do not use in a place that has excessive electrical surge generation, even though this product is compliant with CE marking.
When there are units (solenoid type lifter, high frequency induction furnace, motor, etc.) which generate a large amount of surge in an area around the controller, deterioration or damage may occur to the internal circuit elements of the controller. Avoid sources of surge generation and crossed lines.

6. Select a product type that has built-in surge absorbing elements for a load, such as relays or solenoid valves which are employed for driving voltage generating load directly.

7. Install the actuator in a place without vibration and impact.
Vibration and impact causes damage and malfunction to the product and work, as well as prevents the work from meeting the specified parameters.

Adjustment and Operation

⚠ Warning

1. Do not short the loads.
Short on the load of the controller indicates an error, but it may cause over current and damage the controller.

2. Do not operate or conduct any settings with wet hands.
An electrical shock may result from wet hands.

3. When operating the controller, avoid making contact with the workpiece.
Contact with the workpiece may cause injury.

⚠ Caution

1. Do not push the setting buttons with sharp pointed items.
Sharp pointed items may cause setting button damage.

2. Do not touch the sides and lower parts of the motor and controller.
Conduct operation after confirming that the machine is cool since it gets hot while in operation.

3. After the stroke is adjusted, turn on the power supply and then perform stroke learning.
If stroke learning is not performed, the product may not operate according to the adjusted stroke and damage to any connected equipment may occur.

4. Do not randomly change the guide adjusting section setting.
Readjustment of the guide is not necessary for normal operation, since it is pre-adjusted. Accordingly, do not randomly change the guide adjusting section setting.

Maintenance

⚠ Warning

1. Periodically perform maintenance of the product.
Confirm that the piping and bolts are securely tightened.
Unintentional malfunction of a system's components may occur as a result of an actuator malfunction.

2. Do not disassemble, modify (including change of printed circuit board) or repair.
Disassembly or modification may result in injury or failure.

⚠ Caution

1. Confirm the range of movement of a workpiece (a slider) before connecting the driving power supply or turning on the switch.
The movement of the work may cause an accident.
When the power supply is turned on, the work is returned to home position by input IN1 or IN2 signal. (Except in the case when stroke learning is not performed ever).