Parallel Style Air Gripper/2 Finger, 3 Finger, 4 Finger

Series MHS

ø16, ø20, ø25, ø32, ø40, ø50, ø63, ø80, ø100, ø125

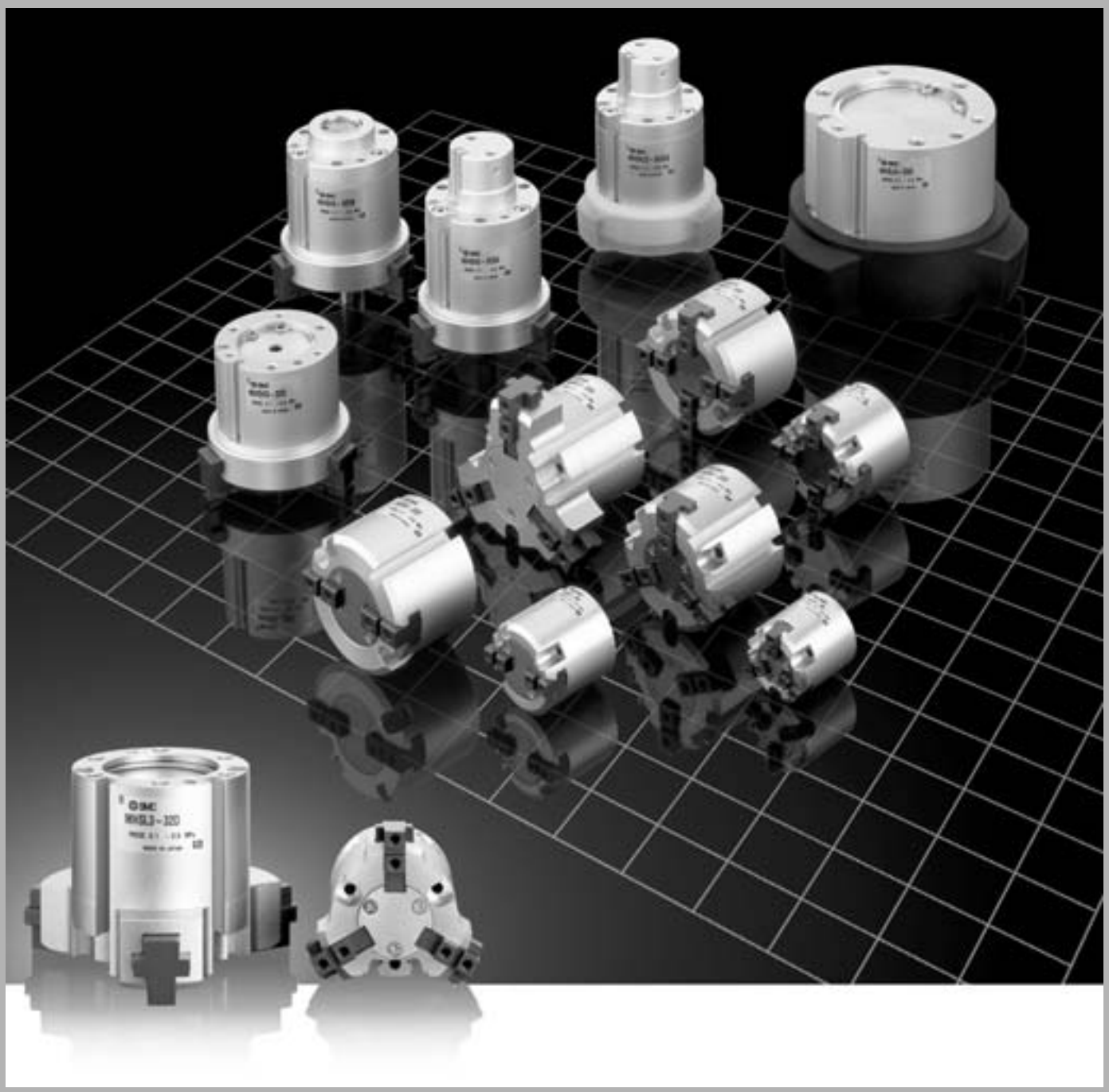

Lightweight, compact design with reduced height

High repeatability: ±0.01 mm

Auto switch capable

A wide variety of solid state auto switches can be mounted using the body's side mounting grooves. Selections include 2-color indication and water resistant types.

Easy alignment when mounting

Positioning pin holes are provided on the top of the gripper.

Can be mounted from two directions

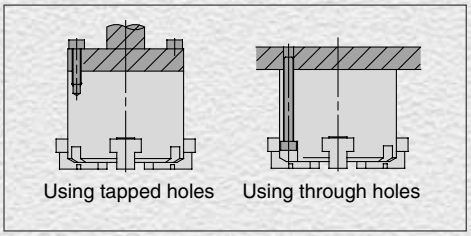

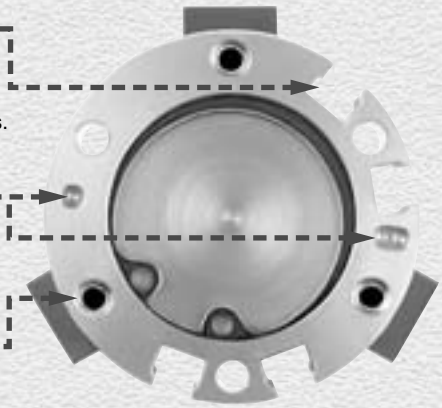

Smaller auto switch mountable

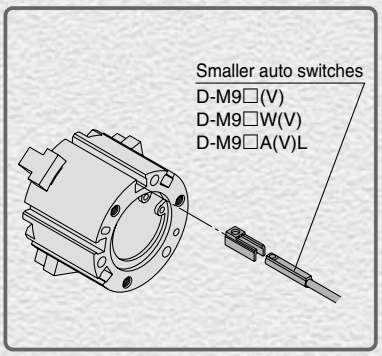

Employs wedge cam construction

The wedge cam mechanism allows strong gripping force to be obtained from a compact design.

Series Variations

Bore size (mm): 16, 20, 25, 32, 40, 50, 63, 80, 100, 125

2 Finger

Series MHS2

Gripping of diverse workpieces

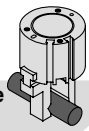

P.544

3 Finger

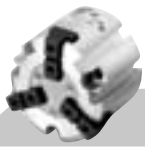

Series MHS3

Axial gripping of cylindrical workpieces

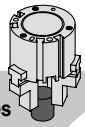

P. 552

Long stroke
Series MHSL3

Accommodates a wide range of workpiece diameters

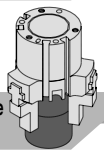

P. 586

4 Finger

Series MHS4

Positioning of square workpieces

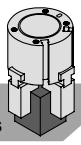

P. 596

Ideal for gripping workpieces of different diameters

MHSL3 Long Stroke

P. 586

Opening/Closing stroke more than twice the standard (MHS3)

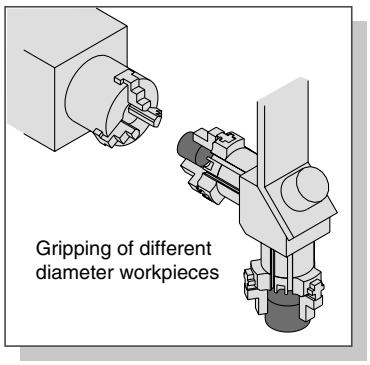

Bore size (mm)	Stroke (mm) Dia.: Open – Closed	Height (mm)	Mass (g)
16	10 (4)	43.5	80
20	10 (4)	46	135
25	12 (6)	49	180
32	16 (8)	58	370
40	20 (8)	64	550
50	28 (12)	77.5	930
63	32 (16)	89	1,550
80	40 (20)	116	2,850
100	48 (24)	135	5,500
125	64 (32)	175	11,300

Standard inside ( )/MHS3 stroke

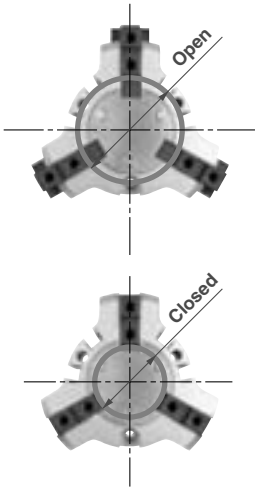

● **The mounting pitch is compatible with the standard type.**

MHS3 Variations

With dust cover/MHSJ3

P. 562

Through-hole/MHSH3

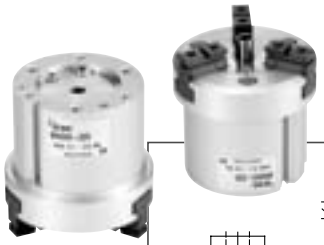

P. 570

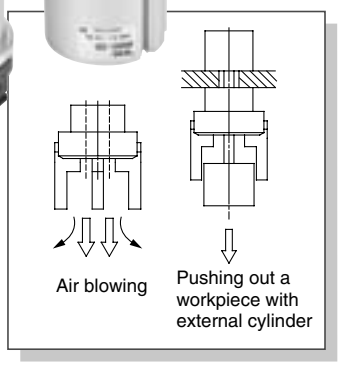

		Bore size (mm) 16	20	25	32	40	50	63	80
MHSJ3	With dust cover	○	○	○	○	○	○	○	○
MHSH3	Through-hole	○	○	○	○	○	○	○	○
	With center pusher (Cylinder type)				○	○	○	○	○
	With center pusher (Spring type)				○	○	○	○	○
MHSHJ3	Through-hole with dust cover				○	○	○	○	○
	With dust cover/Center pusher (Cylinder type)				○	○	○	○	○
	With dust cover/Center pusher (Spring type)				○	○	○	○	○

With dust cover/Center pusher

The dust cover and center pusher assembly can be modularized for the through-hole MHSH3.

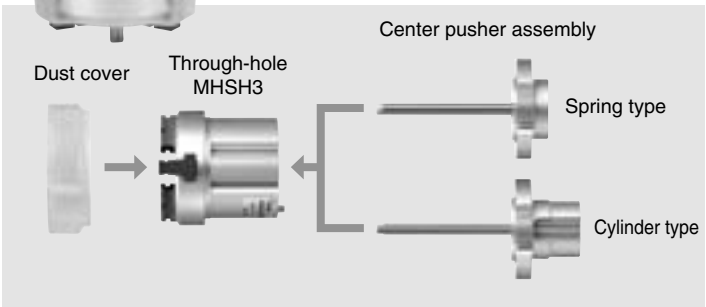

Model Selection

Model Selection

Selection Procedure

Step 1 Confirmation of gripping force → **Step 2** Confirmation of gripping point

Step 1 Confirmation of Gripping Force

Confirmation of conditions → Calculation of required gripping force → Selection of model from gripping force graph

Example

Workpiece mass: 0.4 kg

Gripping method: External gripping

Number of fingers: 2

Model selection criteria with respect to workpiece weight

- Although differences will exist depending on the coefficient of friction between attachments and workpieces, select a model which will provide a gripping force as shown in the table below.

Note1) Refer to the model selection illustration regarding multiples of the workpiece weight.

Model	Multiples of gripping force by workpiece weight
MHS2	10 to 20 times or more
MHS3	7 to 13 times or more
MHSJ3	
MHSH3	
MHSL3	
MHS4	5 to 10 times or more

- If high acceleration, deceleration or impact forces are encountered during motion, a further margin of safety should be considered.

Example) When it is desired to set the gripping force at 20 times or more above the workpiece weight.
Required gripping force
= 0.4 kg x 20 x 9.8 m/s^2 ≅ 78.4 N or more

Gripping point: 20 mm

Operating pressure: 0.4 MPa

MHS2-32D
External Gripping Force

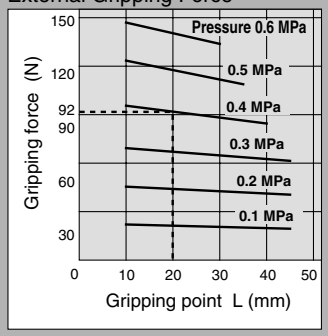

- Selecting the **MHS2-32D**.
  A gripping force of 92 N is obtained from the intersection point of the gripping point distance L = 20 mm and a pressure of 0.4 MPa.
- The gripping force is 23 times greater than the workpiece mass, and therefore satisfies a gripping force setting value of 20 times or more.

Note) For **Step 2**, refer to the gripping point for the effective gripping force of each model.

Model Selection Illustration

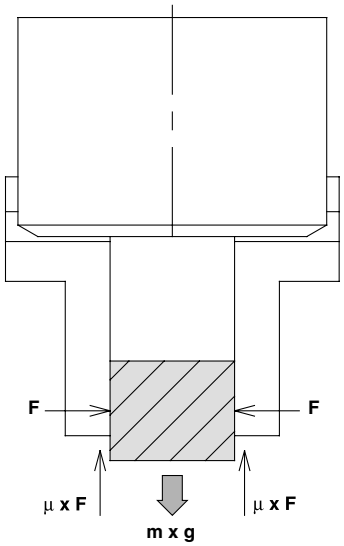

When gripping a workpiece as in the figure to the left, and with the following definitions,
n: Number of fingers
F: Gripping force (N)
μ: Coefficient of friction between attachments and workpiece
m: Workpiece mass (kg)
g: Gravitational acceleration (= 9.8 m/s^2)
mg: Workpiece weight (N)

the conditions under which the workpiece will not drop are

$$n \times \mu F > mg$$

and therefore,

$$F > \frac{mg}{n \times \mu}$$

With "**a**" as the safety margin, **F** is determined as follows:

$$F = \frac{a \times mg}{n \times \mu}$$

Multiples of Gripping Force by Workpiece Mass

Number of fingers: When n = 2

• SMC performs calculations allowing for impacts which occur during normal transfer, etc., using a safety margin of a = 4.

When μ = 0.2	When μ = 0.1
$F = \frac{mg}{2 \times 0.2} \times 4$ $= 10 \times mg$	$F = \frac{mg}{2 \times 0.1} \times 4$ $= 20 \times mg$
↑ 10 x workpiece weight	↑ 20 x workpiece weight

Note) • Even in cases where the coefficient of friction is greater than μ = 0.2, for safety reasons, SMC recommends selecting a gripping force which is at least 10 to 20 times the workpiece weight.
• If high acceleration, deceleration or impact forces are encountered during motion, a further margin of safety should be considered.

Parallel Style Air Gripper/2-Finger Type

Series MHS2

ø16, ø20, ø25, ø32, ø40, ø50, ø63

How to Order

Bore size

ø16 to ø25

MHS2 – 20 D – M9BW □ – □

Number of fingers

2	2 fingers

Bore size

16	16 mm
20	20 mm
25	25 mm

Action

D	Double acting

Auto switch

Nil	Without auto switch (Built-in magnet)

∗For the applicable auto switch model, refer to the table below.

Number of auto switches

Nil	2 pcs.
S	1 pc.

Made to Order
Refer to page 545 for details.

Applicable Auto Switch/Refer to pages 761 to 809 for further information on auto switches.

Type	Special function	Electrical entry	Indicator light	Wiring (Output)	Load voltage DC	Load voltage AC	Auto switch model Perpendicular	Auto switch model In-line	Lead wire length (m)∗ 0.5 (Nil)	1 (M)	3 (L)	5 (Z)	Pre-wired connector	Applicable load	
Solid state switch	——	Grommet	Yes	3-wire (NPN)	24 V	5 V, 12 V	—	M9NV	M9N	●	●	●	○	○	IC circuit	Relay, PLC
				3-wire (PNP)				M9PV	M9P	●	●	●	○	○		
				2-wire		12 V		M9BV	M9B	●	●	●	○	○	—	
	Diagnosis (2-color indication)			3-wire (NPN)		5 V, 12 V		M9NWV	M9NW	●	●	●	○	○	IC circuit	
				3-wire (PNP)				M9PWV	M9PW	●	●	●	○	○		
				2-wire		12V		M9BWV	M9BW	●	●	●	○	○	—	
	Water resistant (2-color indication)			3-wire (NPN)		5 V, 12 V		M9NAV	M9NA	○	○	●	○	○	IC circuit	
				3-wire (PNP)				M9PAV	M9PA	○	○	●	○	○		
				2-wire		12 V		M9BAV	M9BA	○	○	●	○	○	—	

∗ Lead wire length symbols: 0.5 m ····· Nil (Example) M9N
1 m ····· M (Example) M9NWM
3 m ····· L (Example) M9NL
5 m ····· Z (Example) M9NZ

∗ Auto switches marked with a "○" symbol are produced upon receipt of order.

Note 1) Take note of hysteresis with 2-color indication type switches. Refer to "Auto Switch Hysteresis" on page 606.
Note 2) Refer to pages 761 to 809 for further information on auto switches.

Bore size

ø32 to ø63

MHS2 – 50 D – M9BW □ – □

Number of fingers

2	2 fingers

Bore size

32	32 mm
40	40 mm
50	50 mm
63	63 mm

Action

D	Double acting

Auto switch

Nil	Without auto switch (Built-in magnet)

∗For the applicable auto switch model, refer to the table below.

Number of auto switches

Nil	2 pcs.
S	1 pc.

Made to Order
Refer to page 545 for details.

Applicable Auto Switch/Refer to pages 761 to 809 for further information on auto switches.

Type	Special function	Electrical entry	Indicator light	Wiring (Output)	Load voltage DC	Load voltage AC	Auto switch model Perpendicular	Auto switch model In-line	Lead wire length (m)∗ 0.5 (Nil)	1 (M)	3 (L)	5 (Z)	Pre-wired connector	Applicable load	
Solid state switch	——	Grommet	Yes	3-wire (NPN)	24 V	5 V, 12 V	—	M9NV	M9N	●	●	●	○	○	IC circuit	Relay, PLC
				3-wire (PNP)				M9PV	M9P	●	●	●	○	○		
				2-wire		12 V		M9BV	M9B	●	●	●	○	○	—	
	Diagnosis (2-color indication)			3-wire (NPN)		5 V, 12 V		M9NWV	M9NW	●	●	●	○	○	IC circuit	
				3-wire (PNP)				M9PWV	M9PW	●	●	●	○	○		
				2-wire		12 V		M9BWV	M9BW	●	●	●	○	○	—	
	Water resistant (2-color indication)			3-wire (NPN)		5 V, 12 V		M9NAV	M9NA	○	○	●	○	○	IC circuit	
				3-wire (PNP)				M9PAV	M9PA	○	○	●	○	○		
				2-wire		12 V		M9BAV	M9BA	○	○	●	○	○	—	

∗ Lead wire length symbols: 0.5 m ····· Nil (Example) M9NW
1 m ····· M (Example) M9NWM
3 m ····· L (Example) M9NWL
5 m ····· Z (Example) M9NWZ

∗ Auto switches marked with a "○" symbol are produced upon receipt of order.

Note 1) Take note of hysteresis with 2-color indication type switches. Refer to "Auto Switch Hysteresis" on page 606.
Note 2) Refer to pages 761 to 809 for further information on auto switches.
Note 3) When mounting D-M9□□ on the cylinder (ø32 to ø63), auto switch mounting brackets (BMG2-012) are necessary.

Model/Specifications

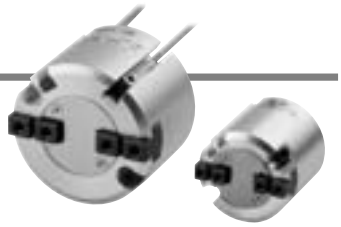

Model		MHS2-16D	MHS2-20D	MHS2-25D	MHS2-32D	MHS2-40D	MHS2-50D	MHS2-63D
Bore size (mm)		16	20	25	32	40	50	63
Fluid		Air						
Operating pressure (MPa)		0.2 to 0.6			0.1 to 0.6			
Ambient and fluid temperature (°C)		-10 to 60						
Repeatability (mm)		±0.01						
Max. operating frequency (c.p.m.)		120			60			
Lubrication		Not required						
Action		Double acting						
Effective gripping force (N) at 0.5 MPa Note)	**External grip**	21	37	63	111	177	280	502
	Internal grip	23	42	71	123	195	306	537
Opening/Closing stroke (Both sides) (mm)		4	4	6	8	8	12	16
Mass (g)		58	96	134	265	345	515	952

Note) Values for ø16 to ø25 are with gripping point L = 20 mm, and for ø32 to ø63 with gripping point L = 30 mm.
Refer to "Effective Gripping Force" data on pages 547 and 548 for the gripping force at each gripping position.

Symbol

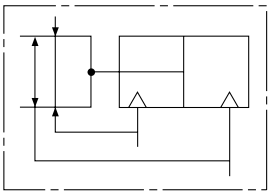

Made to Order
(Refer to pages 683 to 713 for details.)

Symbol	Specifications/Description
-X4	Heat resistance (100°C)
-X5	Fluororubber seal
-X50	Without magnet
-X53	EPDM seal/Fluorine grease
-X56	Axial ported
-X63	Fluorine grease
-X79	Grease for food

Refer to pages 604 to 611 for the specifications of products with auto switches.

- Auto switch installation examples and mounting positions
- Auto switch hysteresis
- Auto switch mounting
- Protrusion of auto switch from edge of body

Construction

Closed condition

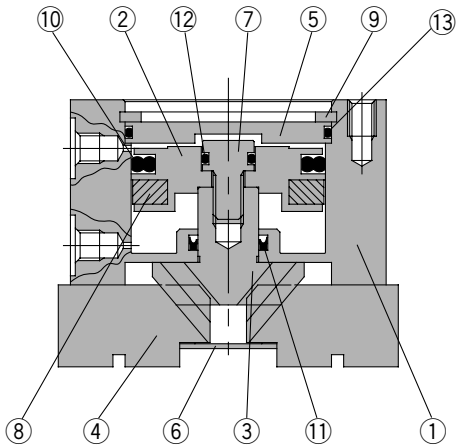

Open condition

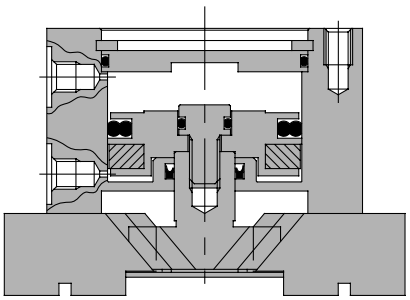

Component Parts

No.	Description	Material	Note
1	**Body**	Aluminum alloy	Hard anodized
2	**Piston**	Aluminum alloy	Hard anodized
3	**Cam**	Carbon steel	Heat treated, Specially treated
4	**Finger**	Carbon steel	Heat treated, Specially treated
5	**Cap**	Aluminum alloy	Hard anodized
6	**End plate**	Stainless steel	
7	**Piston bolt**	Stainless steel	

No.	Description	Material	Note
8	**Rubber magnet**	Synthetic rubber	
9	**Type C retaining ring**	Carbon steel	Nickel plated
10	**Piston seal**	NBR	
11	**Rod seal**	NBR	
12	**Gasket**	NBR	
13	**Gasket**	NBR	

Replacement Parts

Description	**MHS2-16D**	**MHS2-20D**	**MHS2-25D**	**MHS2-32D**	**MHS2-40D**	**MHS2-50D**	**MHS2-63D**	Main parts
Seal kit	MHS16-PS	MHS20-PS	MHS25-PS	MHS32-PS	MHS40-PS	MHS50-PS	MHS63-PS	⑩⑪⑫⑬
Finger	P3316004	P3346104	P3316204	P3316304	P3316404	P3316504	P3316604	④
Cam	P3316023	P3316123	P3316223	P3316323	P3316423	P3316523	P3316623	③
Piston assembly	MHS-A1601	MHS-A2001	MHS-A2501	MHS-A3201	MHS-A4001	MHS-5001	MHS-A6301	②⑦⑧

∗ Order 2 pieces of fingers for one unit.
Replacement part/Grease pack part no.: MH-G01 (30 g)

Gripping Point

- The workpiece gripping point distance should be within the gripping force ranges given for each pressure in the effective gripping force graphs below.
- If operated with the workpiece gripping point beyond the indicated ranges, an excessive offset load will be applied to the sliding section of the fingers, which can have an adverse effect on the service life of the product.

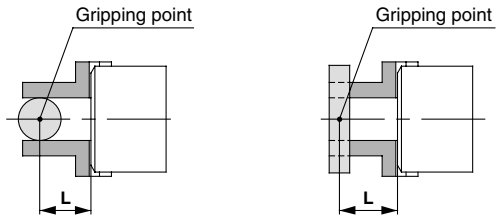

External grip Internal grip

L: Gripping point distance

Effective Gripping Force

- Indication of effective gripping force
  The effective gripping force shown in the graphs to the right is expressed as **F**, which is the thrust of one finger, when both fingers and attachments are in full contact with the workpiece as shown in the figure below.

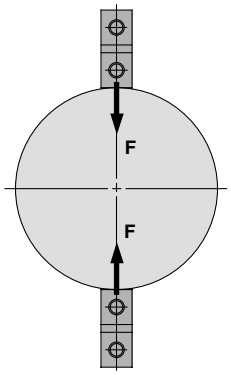

External grip

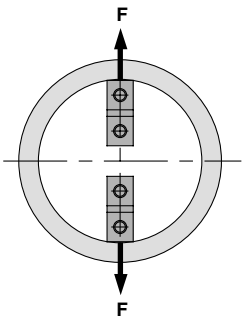

Internal grip

External Grip

MHS2-16D

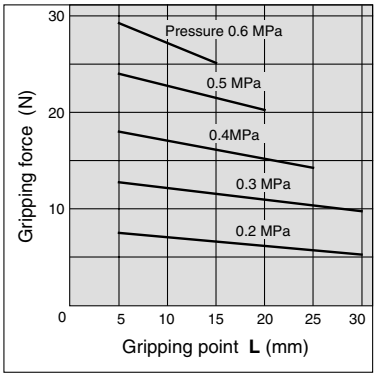

MHS2-20D

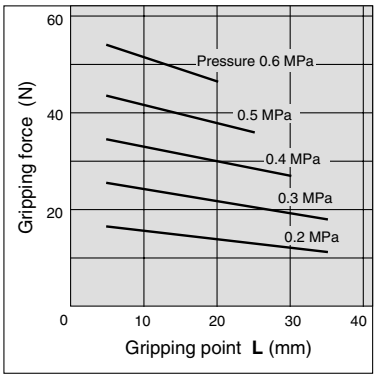

MHS2-25D

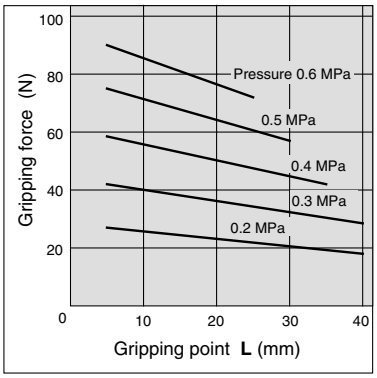

Internal Grip

MHS2-16D

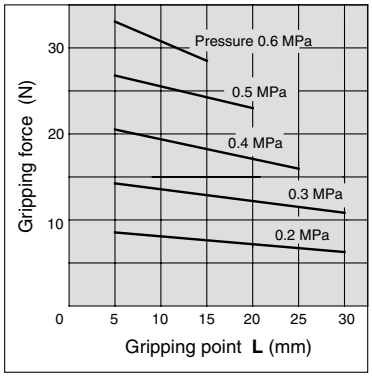

MHS2-20D

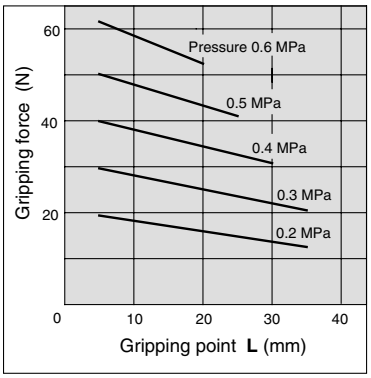

MHS2-25D

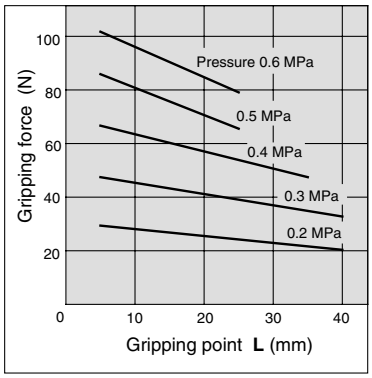

Effective Gripping Force

- Indication of effective gripping force
  The effective gripping force shown in the graphs to the right is expressed as **F**, which is the thrust of one finger, when both fingers and attachments are in full contact with the workpiece as shown in the figure below.

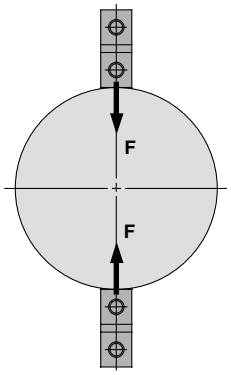

External grip

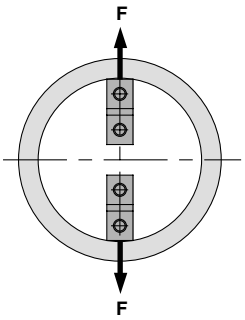

Internal grip

External Grip

MHS2-32D

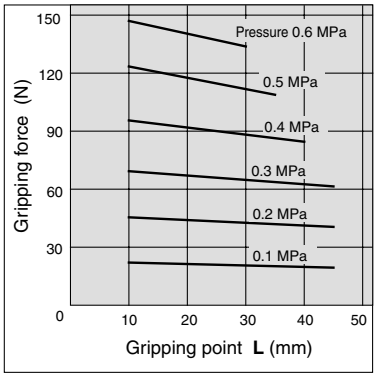

MHS2-40D

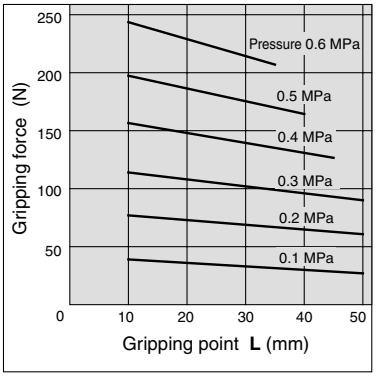

MHS2-50D

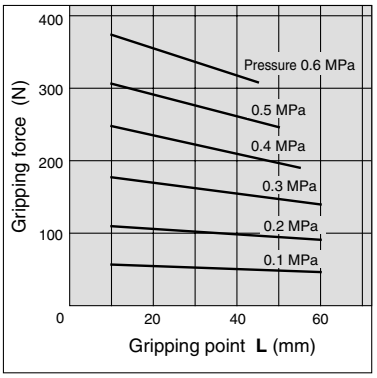

MHS2-63D

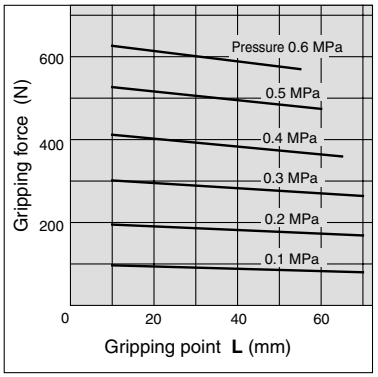

Internal Grip

MHS2-32D

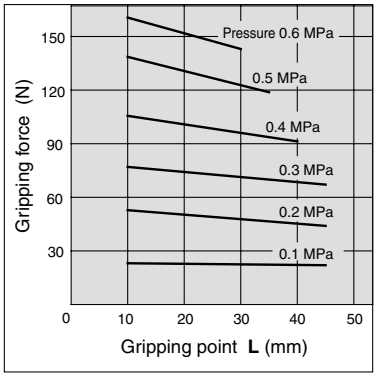

MHS2-40D

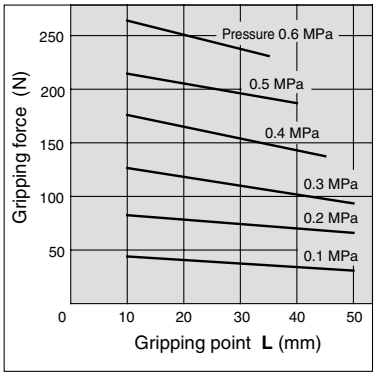

MHS2-50D

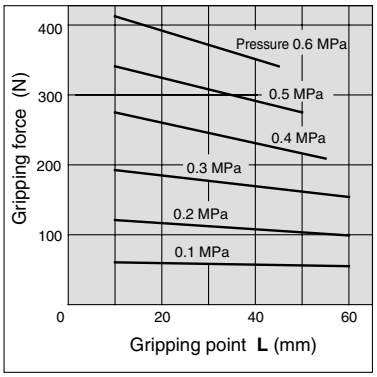

MHS2-63D

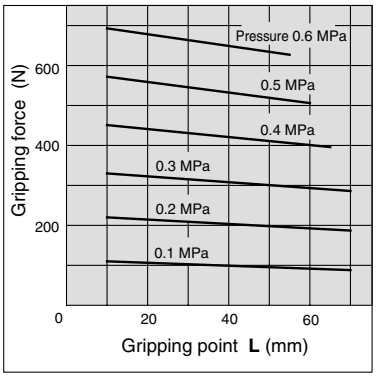

Dimensions

MHS2-16D to 25D

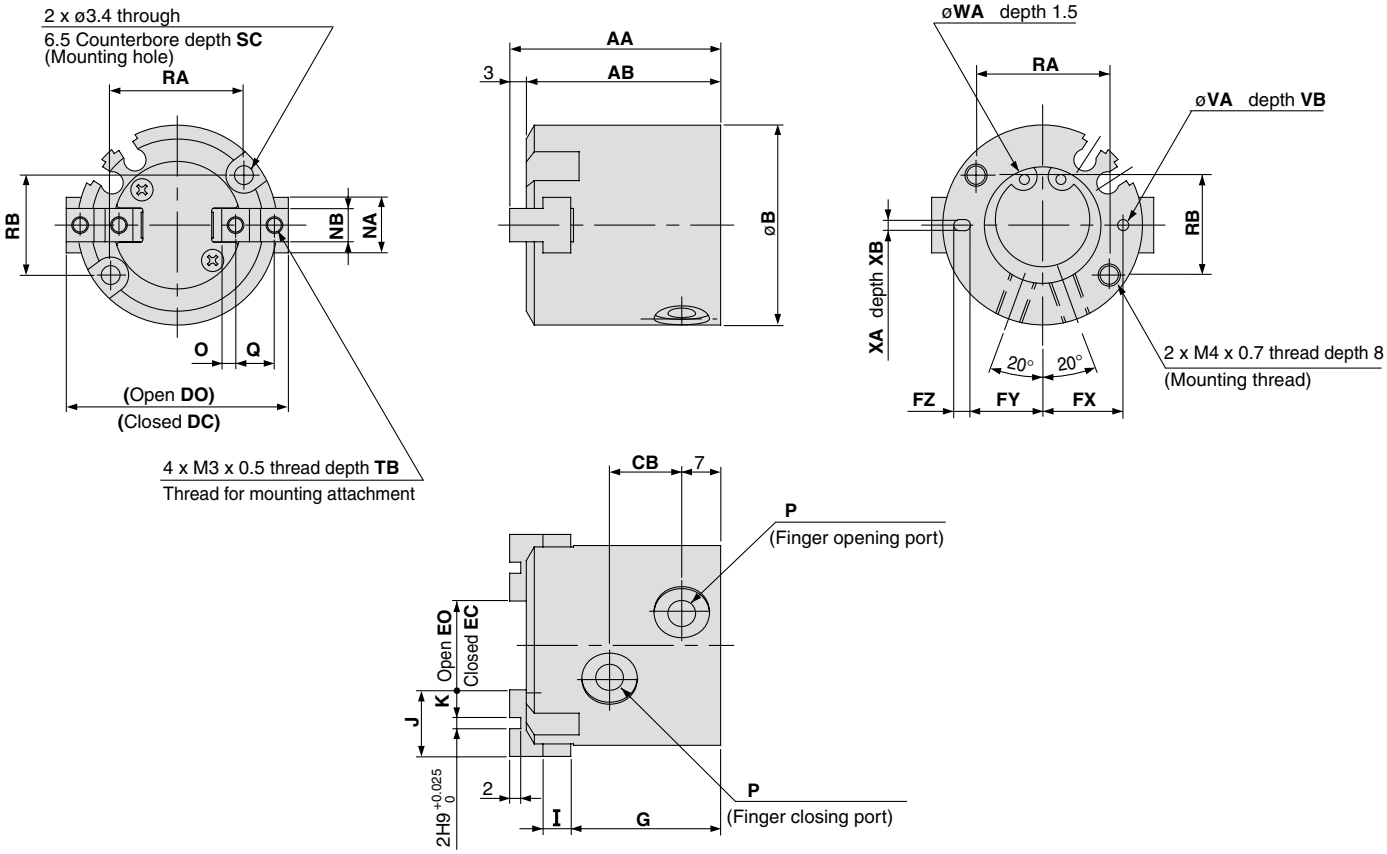

Auto switch mounting groove dimensions (2 locations)

MHS2-16D

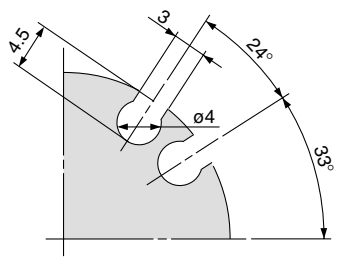

MHS2-20D

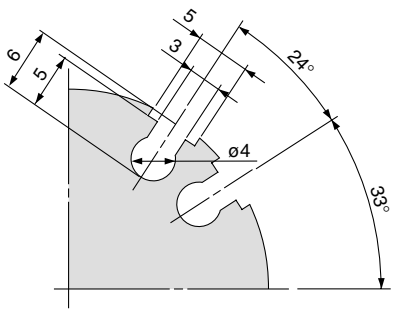

MHS2-25D

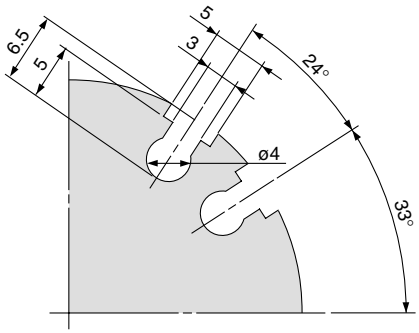

(mm)

Model	AA	AB	B	CB	DC	DO	EC	EO	FX	FY	FZ	G	I	J	K	NA	NB	O	P	Q
MHS2-16D	35	32	30	11	30	34	10	14	12.5	11	3	25	4	10	4	8	5h9 $^{0}_{-0.030}$	2	M3 x 0.5	6
MHS2-20D	38	35	36	13	36	40	12	16	14.5	13	3	27	5	12	5	10	6h9 $^{0}_{-0.030}$	2.5	M5 x 0.8	7
MHS2-25D	40	37	42	15	42	48	14	20	17	14.5	5	28	5	14	6	12	6h9 $^{0}_{-0.030}$	3	M5 x 0.8	8

Model	RA	RB	SC	TB	VA	VB	WA	XA	XB
MHS2-16D	18	16	8	5	2H9 $^{+0.025}_{0}$	2	17H9 $^{+0.043}_{0}$	2H9 $^{+0.025}_{0}$	2
MHS2-20D	24	18	9.5	6	2H9 $^{+0.025}_{0}$	2	21H9 $^{+0.052}_{0}$	2H9 $^{+0.025}_{0}$	2
MHS2-25D	26	22	10	6	3H9 $^{+0.025}_{0}$	3	26H9 $^{+0.052}_{0}$	3H9 $^{+0.025}_{0}$	3

Dimensions

MHS2-32D/40D

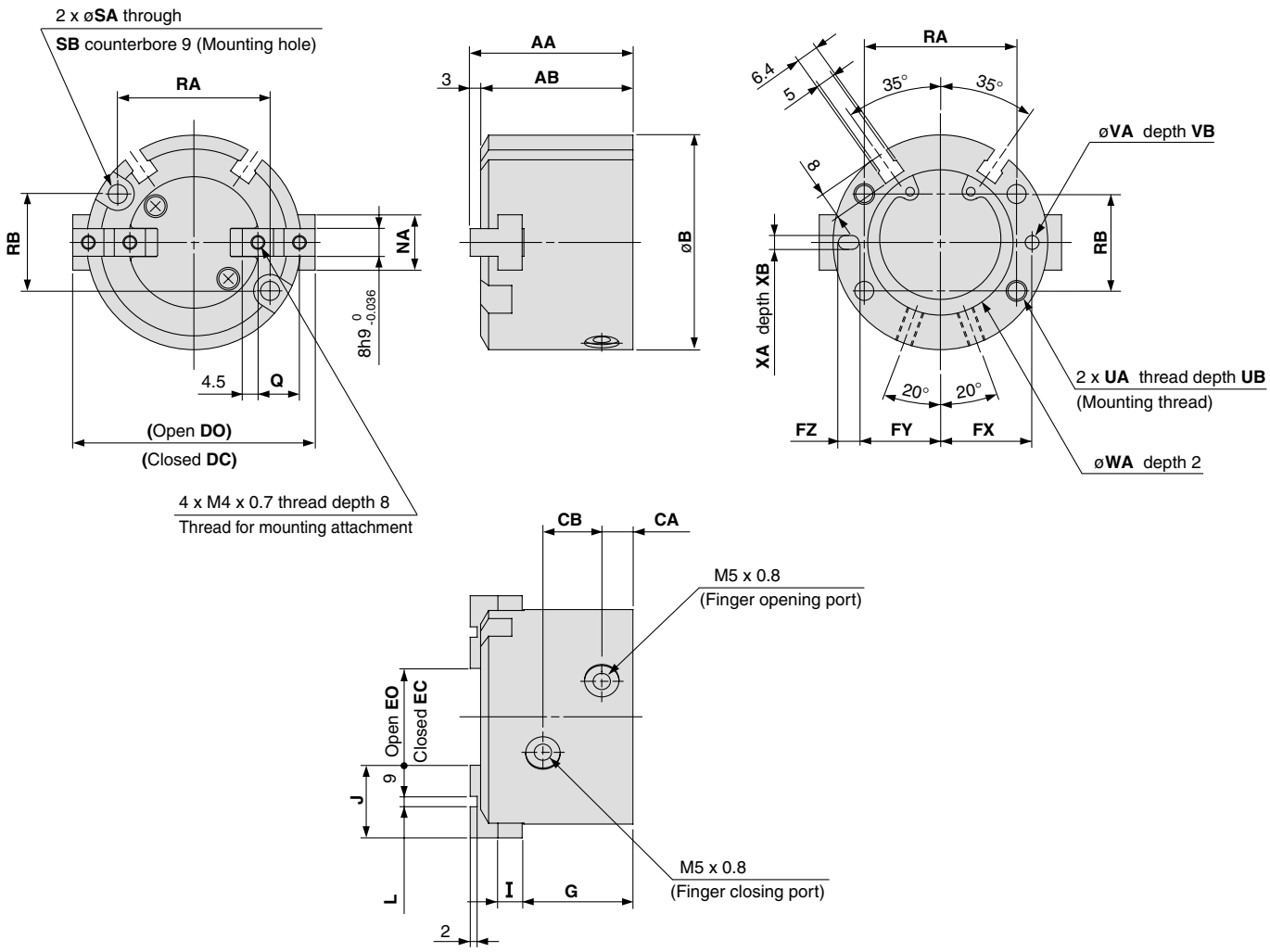

(mm)

Model	AA	AB	B	CA	CB	DC	DO	EC	EO	FX	FY	FZ	G	I	J	L	NA	Q	RA	RB	SA
MHS2-32D	44	41	56	8	16	56	64	16	24	23	20.5	5	30.5	6	20	2H9 $^{+0.025}_{0}$	14	11	38	25	4.5
MHS2-40D	47	44	62	9	17	62	70	20	28	26.5	23.5	6	32	7	21	3H9 $^{+0.025}_{0}$	16	12	44	28	5.5

Model	SB	UA	UB	VA	VB	WA	XA	XB
MHS2-32D	8	M5 x 0.8	10	3H9 $^{+0.025}_{0}$	3	34H9 $^{+0.062}_{0}$	3H9 $^{+0.025}_{0}$	3
MHS2-40D	9.5	M6 x 1	12	4H9 $^{+0.030}_{0}$	4	42H9 $^{+0.062}_{0}$	4H9 $^{+0.030}_{0}$	4

MHS2-50D/63D

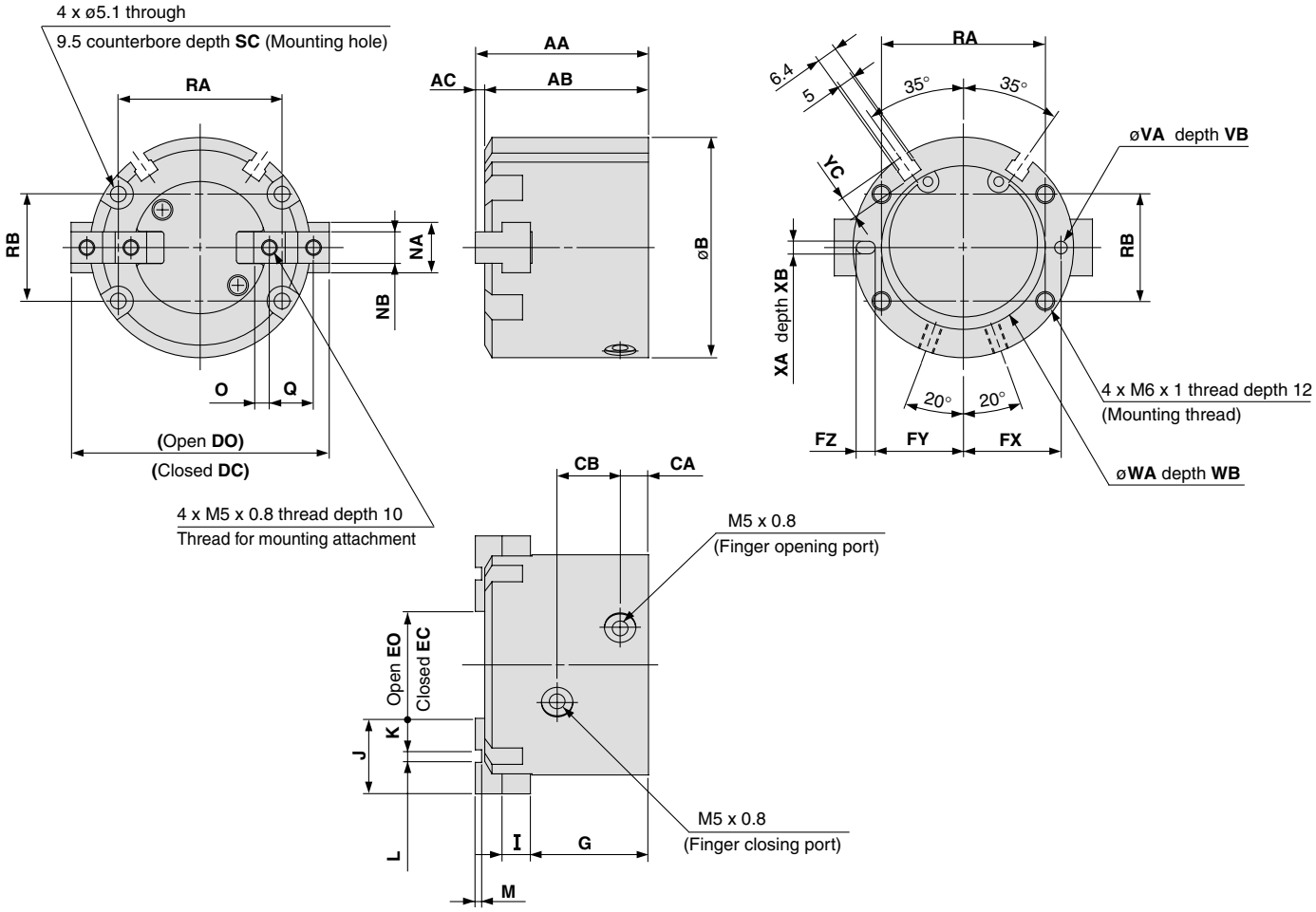

(mm)

Model	AA	AB	AC	B	CA	CB	DC	DO	EC	EO	FX	FY	FZ	G	I	J	K	L	M	NA	NB
MHS2-50D	55	52	3	70	9	20	70	82	22	34	31	28	6	37.5	9	24	10	4H9 $^{+0.030}_{0}$	2	18	10h9 $^{0}_{-0.036}$
MHS2-63D	66	62	4	86	12	22	86	102	30	46	38	34.5	7	44	11	28	11	6H9 $^{+0.030}_{0}$	3	24	12h9 $^{0}_{-0.043}$

Model	O	Q	RA	RB	SC	VA	VB	WA	WB	XA	XB	YC
MHS2-50D	5	14	52	34	12	4H9 $^{+0.030}_{0}$	4	52H9 $^{+0.074}_{0}$	2	4H9 $^{+0.030}_{0}$	4	7
MHS2-63D	5.5	17	66	38	14	5H9 $^{+0.030}_{0}$	5	65H9 $^{+0.074}_{0}$	2.5	5H9 $^{+0.030}_{0}$	5	7.5

Series MHS2 Detailed dimensions of mounting portion of end plate

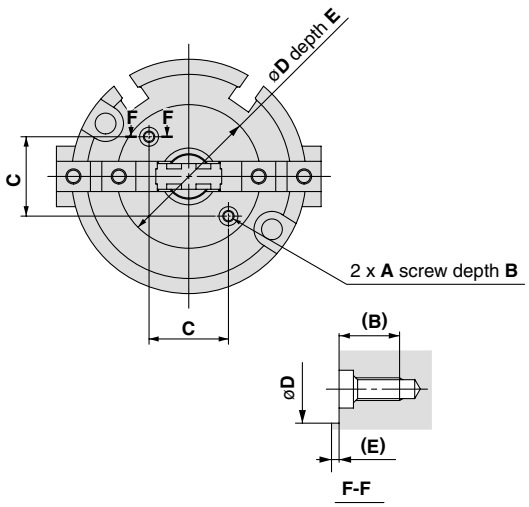

(mm)

Model	A	B	C	øD	E
MHS2-16D	M2 x 0.4	5.5	11	21	0.5
MHS2-20D		5.4	13	24	0.6
MHS2-25D			15	27	
MHS2-32D		5.2	18	32	0.8
MHS2-40D	M3 x 0.5	8	21	38	1
MHS2-50D			24	42	
MHS2-63D			32	54	

Parallel Style Air Gripper/3-Finger Type

Series MHS3

ø16, ø20, ø25, ø32, ø40, ø50, ø63, ø80, ø100, ø125

How to Order

Bore size

ø16 to ø25 **MHS3 – 20 D – M9BW □ – □**

Number of fingers

3	3 fingers

Bore size

16	16 mm
20	20 mm
25	25 mm

Action

D	Double acting

Auto switch

Nil	Without auto switch (Built-in magnet)

∗For the applicable auto switch model, refer to the table below.

Number of auto switches

Nil	2 pcs.
S	1 pc.

Made to Order
Refer to page 553 for details.

Applicable Auto Switch/Refer to pages 761 to 809 for further information on auto switches.

Type	Special function	Electrical entry	Indicator light	Wiring (Output)	Load voltage DC		Load voltage AC	Auto switch model Perpendicular	Auto switch model In-line	Lead wire length (m)∗ 0.5 (Nil)	1 (M)	3 (L)	5 (Z)	Pre-wired connector	Applicable load	
Solid state switch	——	Grommet	Yes	3-wire (NPN)	24 V	5 V, 12 V	—	M9NV	M9N	●	●	●	○	○	IC circuit	Relay, PLC
				3-wire (PNP)				M9PV	M9P	●	●	●	○	○		
				2-wire		12 V		M9BV	M9B	●	●	●	○	○	—	
	Diagnosis (2-color indication)			3-wire (NPN)		5 V, 12 V		M9NWV	M9NW	●	●	●	○	○	IC circuit	
				3-wire (PNP)				M9PWV	M9PW	●	●	●	○	○		
				2-wire		12 V		M9BWV	M9BW	●	●	●	○	○	—	
	Water resistant (2-color indication)			3-wire (NPN)		5 V, 12 V		M9NAV	M9NA	○	○	●	○	○	IC circuit	
				3-wire (PNP)				M9PAV	M9PA	○	○	●	○	○		
				2-wire		12 V		M9BAV	M9BA	○	○	●	○	○	—	

∗ Lead wire length symbols: 0.5 m ····· Nil (Example) M9N
1 m ····· M (Example) M9NWM
3 m ····· L (Example) M9NL
5 m ····· Z (Example) M9NZ

∗ Auto switches marked with a "○" symbol are produced upon receipt of order.

Note 1) Take note of hysteresis with 2-color indication type switches. Refer to "Auto Switch Hysteresis" on page 606.
Note 2) Refer to pages 761 to 809 for further information on auto switches.

Bore size

ø32 to ø125 **MHS3 – 50 □ D – M9BW □ – □**

Number of fingers

3	3 fingers

Bore size

32	32 mm
40	40 mm
50	50 mm
63	63 mm
80	80 mm
100	100 mm
125	125 mm

Action

D	Double acting

Port thread type

Symbol	Type	Cylinder bore
Nil	M thread	ø32 to ø63
	Rc	ø80 to ø125
TN	NPT	
TF	G	

Auto switch

Nil	Without auto switch (Built-in magnet)

∗For the applicable auto switch model, refer to the table below.

Number of auto switch

Nil	2 pcs.
S	1 pc.
n	"n" pcs.

Made to Order
Refer to page 553 for details.

Applicable Auto Switch/Refer to pages 761 to 809 for further information on auto switches.

Type	Special function	Electrical entry	Indicator light	Wiring (Output)	Load voltage DC		Load voltage AC	Auto switch model Perpendicular	Auto switch model In-line	Lead wire length (m)∗ 0.5 (Nil)	1 (M)	3 (L)	5 (Z)	Pre-wired connector	Applicable load	
Solid state switch	——	Grommet	Yes	3-wire (NPN)	24 V	5 V, 12 V	—	M9NV	M9N	●	●	●	○	○	IC circuit	Relay, PLC
				3-wire (PNP)				M9PV	M9P	●	●	●	○	○		
				2-wire		12 V		M9BV	M9B	●	●	●	○	○	—	
	Diagnosis (2-color indication)			3-wire (NPN)		5 V, 12 V		M9NWV	M9NW	●	●	●	○	○	IC circuit	
				3-wire (PNP)				M9PWV	M9PW	●	●	●	○	○		
				2-wire		12 V		M9BWV	M9BW	●	●	●	○	○	—	
	Water resistant (2-color indication)			3-wire (NPN)		5 V, 12 V		M9NAV	M9NA	○	○	●	○	○	IC circuit	
				3-wire (PNP)				M9PAV	M9PA	○	○	●	○	○		
				2-wire		12 V		M9BAV	M9BA	○	○	●	○	○	—	

∗ Lead wire length symbols: 0.5 m ····· Nil (Example) M9NW
1 m ····· M (Example) M9NWM
3 m ····· L (Example) M9NWL
5 m ····· Z (Example) M9NWZ

∗ Auto switches marked with a "○" symbol are produced upon receipt of order.

Note 1) Take note of hysteresis with 2-color indication type switches. Refer to "Auto Switch Hysteresis" on page 606.
Note 2) Refer to pages 761 to 809 for further information on auto switches.
Note 3) When mounting D-M9□□ on the cylinder (ø32 to ø125), auto switch mounting brackets (BMG2-012) are necessary.

Models/Specifications

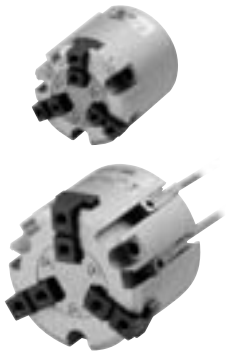

Model		MHS3-16D	MHS3-20D	MHS3-25D	MHS3-32D	MHS3-40D	MHS3-50D	MHS3-63D	MHS3-80D	MHS3-100D	MHS3-125D
Cylinder bore size (mm)		16	20	25	32	40	50	63	80	100	125
Fluid		Air									
Operating pressure (MPa)		0.2 to 0.6			0.1 to 0.6						
Ambient and fluid temperature (°C)		–10 to 60									
Repeatability (mm)		±0.01									
Max. operating frequency (c.p.m.)		120			60				30		
Lubrication		Not required									
Action		Double acting									
Effective gripping force (N) at 0.5 MPa (Note 1)	External grip	14	25	42	74	118	187	335	500	750	1,270
	Internal grip	16	28	47	82	130	204	359	525	780	1,320
Opening/Closing stroke (mm) (dia.)		4	4	6	8	8	12	16	20	24	32
Mass (g)		60	100	140	237	351	541	992	1,850	3,340	6,460

Note 1) Values for ø16 to ø25 are with gripping point L = 20 mm, for ø32 to ø63 with gripping point L = 30 mm, and for ø80 to ø125 with gripping point L = 50 mm. Refer to "Effective Gripping Force" data on pages 555 to 557 for the gripping force at each gripping position.

Symbol

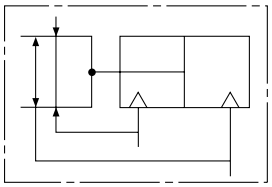

Made to Order
(Refer to pages 683 to 713 for details.)

Symbol	Specifications/Description
-X4	Heat resistance (100°C)
-X5	Fluororubber seal
-X50	Without magnet
-X53	EPDM seal/Fluorine grease
-X56	Axial ported
-X63	Fluorine grease
-X79	Grease for food

Refer to pages 604 to 611 for the specifications of products with auto switches.

- Auto switch installation examples and mounting positions
- Auto switch hysteresis
- Auto switch mounting
- Protrusion of auto switch from edge of body

Construction

Closed condition

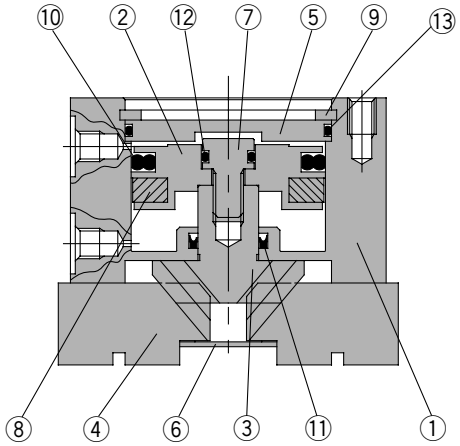

Open condition

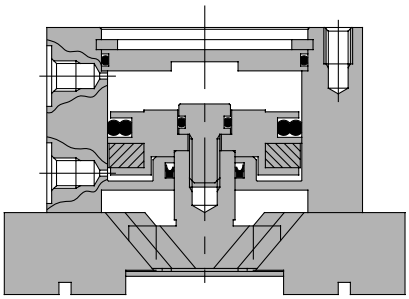

Component Parts

No.	Description	Material	Note
1	**Body**	Aluminum alloy	Hard anodized
2	**Piston**	Aluminum alloy	Hard anodized
3	**Cam**	Carbon steel	Heat treated, Specially treated
4	**Finger**	Carbon steel	Heat treated, Specially treated
5	**Cap**	Aluminum alloy	Hard anodized
6	**End plate**	Stainless steel	
7	**Piston bolt**	Stainless steel	

No.	Description	Material	Note
8	**Rubber magnet**	Synthetic rubber	
9	**Type C snap ring**	Carbon steel	Nickel plated
10	**Piston seal**	NBR	
11	**Rod seal**	NBR	
12	**Gasket**	NBR	
13	**Gasket**	NBR	

Replacement Parts

Description	MHS3-16D	MHS3-20D	MHS3-25D	MHS3-32D	MHS3-40D	Main parts
Seal kit	MHS16-PS	MHS20-PS	MHS25-PS	MHS32-PS	MHS40-PS	⑩⑪⑫⑬
Finger	P3316004	P3316104	P3316204	P3316304	P3316404	④
Cam	P3316003	P3316103	P3316203	P3316303	P3316403	③
Piston assembly	MHS-A1601	MHS-A2001	MHS-A2501	MHS-A3201	MHS-A4001	②⑦⑧

Description	MHS3-50D	MHS3-63D	MHS3-80D	MHS3-100D	MHS3-125D	Main parts
Seal kit	MHS50-PS	MHS63-PS	MHS80-PS	MHS100-PS	MHS125-PS	⑩⑪⑫⑬
Finger	P3316504	P3316604	P3316704	P3316804	P3316904	④
Cam	P3316503	P3316603	P3316703	P3316803	P3316903	③
Piston assembly	MHS-A5001	MHS-A6301	MHS-A8001	MHS-A10001	MHS-A12501	②⑦⑧

∗ Order 3 pieces of fingers for one unit.
Replacement part/Grease pack part no.: MH-G01 (30 g)

Gripping Point

- The workpiece gripping point distance should be within the gripping force ranges given for each pressure in the effective gripping force graphs below.
- If operated with the workpiece gripping point beyond the indicated ranges, an excessive offset load will be applied to the sliding section of the fingers, which can have an adverse effect on the service life of the product.

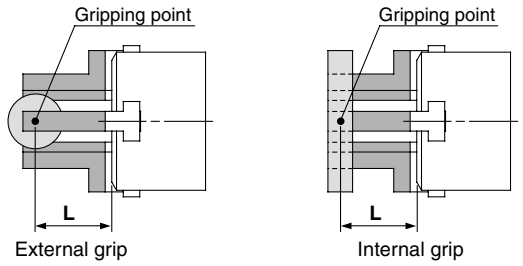

L: Gripping point distance

Effective Gripping Force

- Indication of effective gripping force
  The effective gripping force shown in the graphs to the right is expressed as **F**, which is the thrust of one finger when all 3 of the fingers and attachments are in full contact with the workpiece as shown in the figure below.

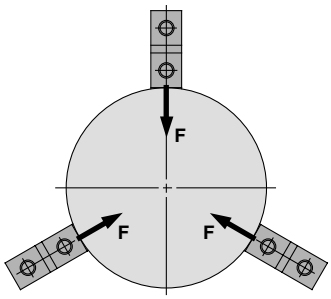

External grip

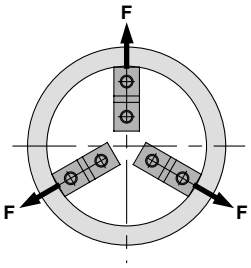

Internal grip

External Gripping Force

MHS3-16D

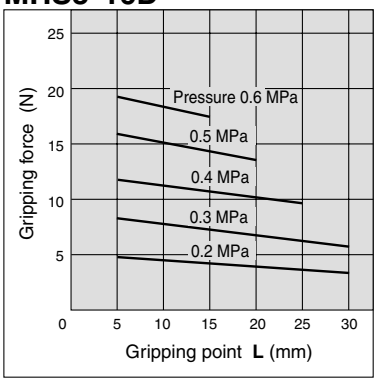

MHS3-20D

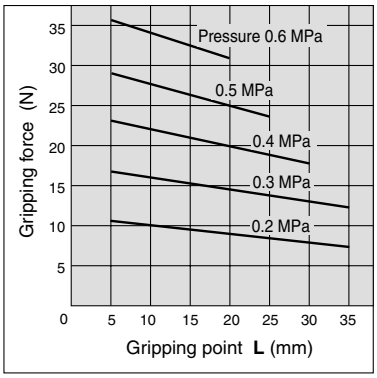

MHS3-25D

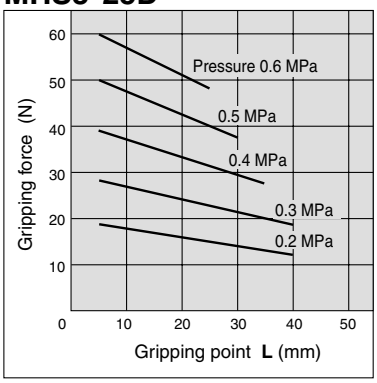

Internal Gripping Force

MHS3-16D

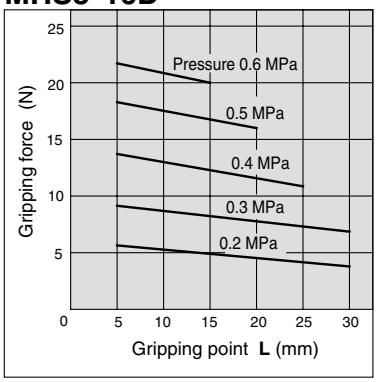

MHS3-20D

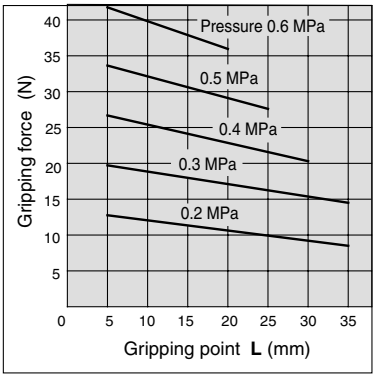

MHS3-25D

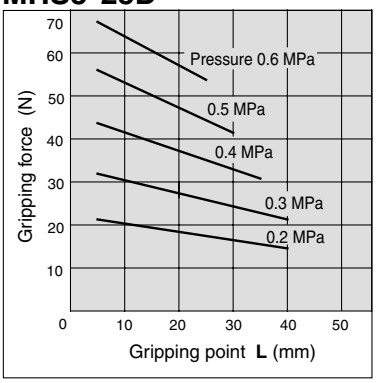

Effective Gripping Force

- Indication of effective gripping force
  The effective gripping force shown in the graphs to the right is expressed as **F**, which is the thrust of one finger when all 3 of the fingers and attachments are in full contact with the workpiece as shown in the figure below.

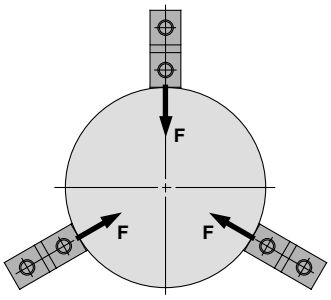

External grip

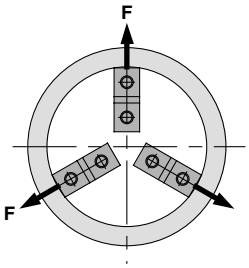

Internal grip

External Gripping Force

MHS3-32D

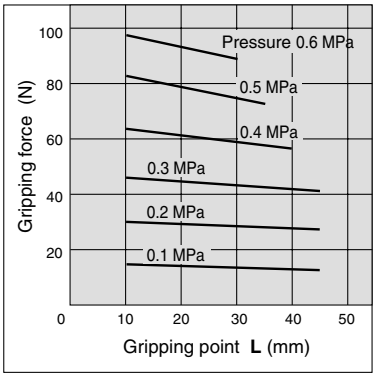

MHS3-40D

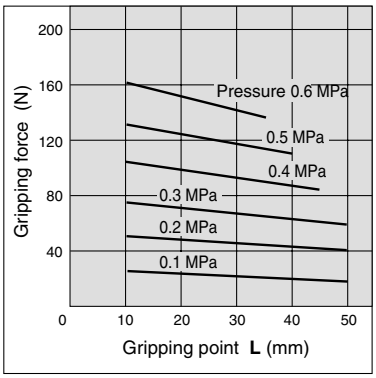

MHS3-50D

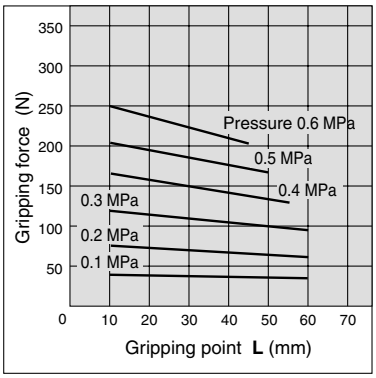

MHS3-63D

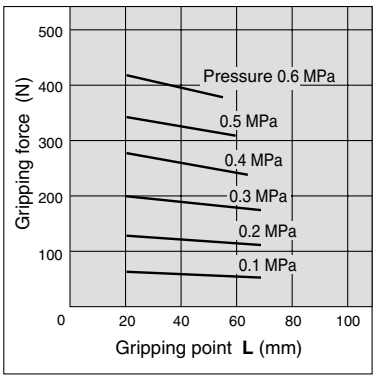

Internal Gripping Force

MHS3-32D

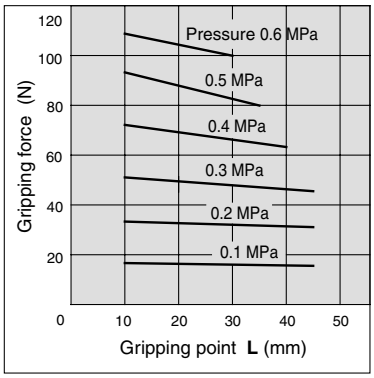

MHS3-40D

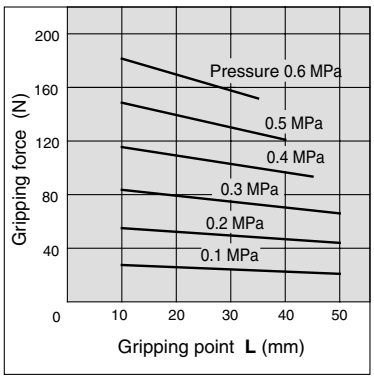

MHS3-50D

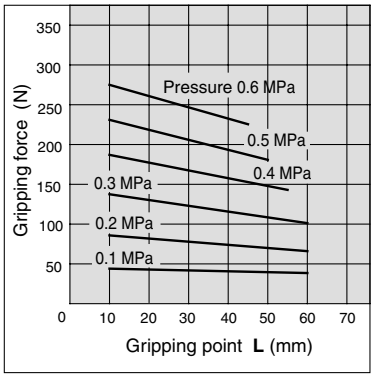

MHS3-63D

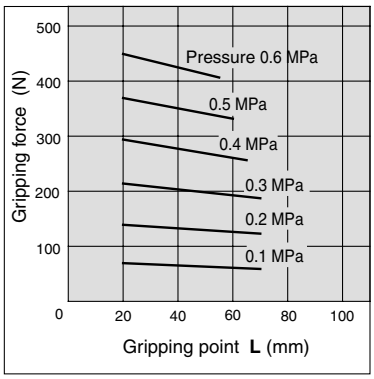

External Gripping Force

MHS3-80D

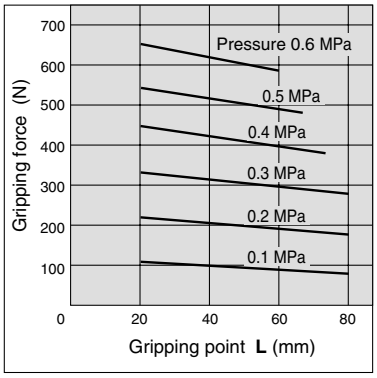

MHS3-100D

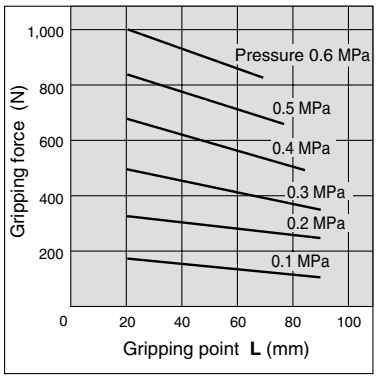

MHS3-125D

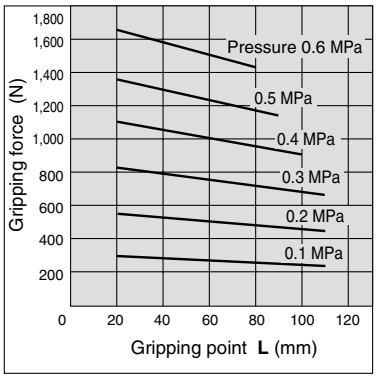

Internal Gripping Force

MHS3-80D

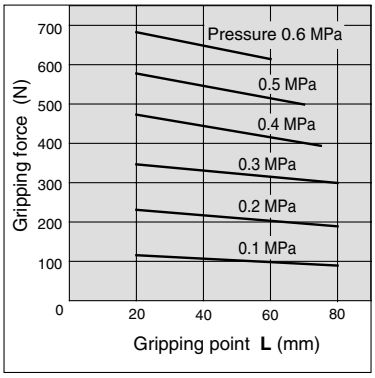

MHS3-100D

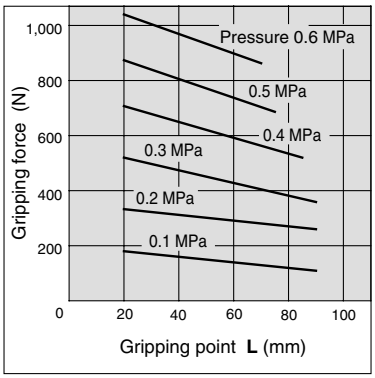

MHS3-125D

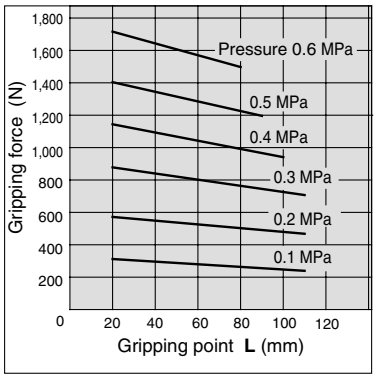

Dimensions

MHS3-16D to 25D

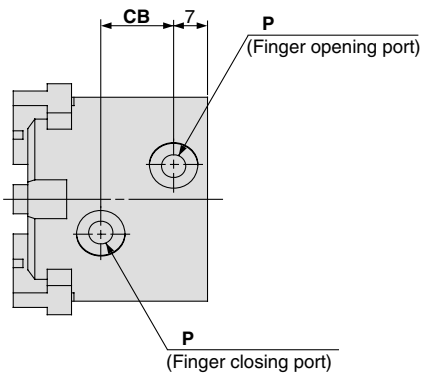

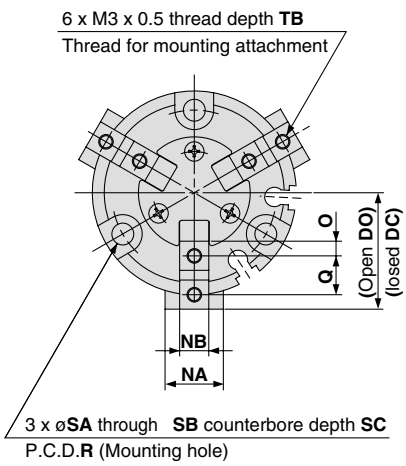

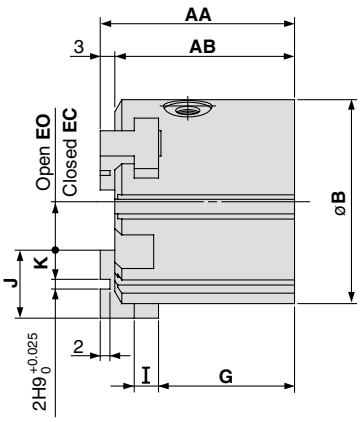

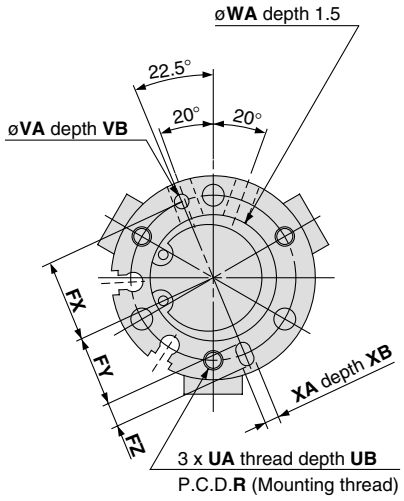

Auto switch mounting groove dimentions (2 locations)

MHS3-16D

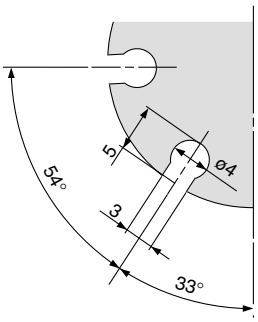

MHS3-20D

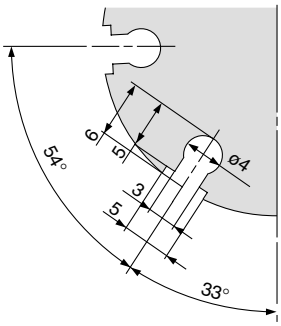

MHS3-25D

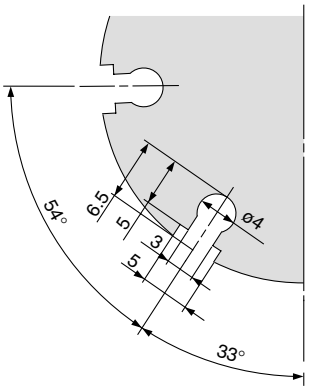

(mm)

Model	AA	AB	B	CB	DC	DO	EC	EO	FX	FY	FZ	G	I	J	K	NA	NB	O	P	Q	R
MHS3-16D	35	32	30	11	15	17	5	7	12.5	11	3	25	4	10	4	8	5h9 $^{0}_{-0.030}$	2	M3 x 0.5	6	25
MHS3-20D	38	35	36	13	18	20	6	8	14.5	13	3	27	5	12	5	10	6h9 $^{0}_{-0.030}$	2.5	M5 x 0.8	7	29
MHS3-25D	40	37	42	15	21	24	7	10	17	14.5	5	28	5	14	6	12	6h9 $^{0}_{-0.030}$	3	M5 x 0.8	8	34

Model	SA	SB	SC	TB	UA	UB	VA	VB	WA	XA	XB
MHS3-16D	3.4	6.5	8	5	M3 x 0.5	4.5	2H9 $^{+0.025}_{0}$	2	17H9 $^{+0.043}_{0}$	2H9 $^{+0.025}_{0}$	2
MHS3-20D	3.4	6.5	9.5	6	M3 x 0.5	6	2H9 $^{+0.025}_{0}$	2	21H9 $^{+0.052}_{0}$	2H9 $^{+0.025}_{0}$	2
MHS3-25D	4.5	8	10	6	M4 x 0.7	6	3H9 $^{+0.025}_{0}$	3	26H9 $^{+0.052}_{0}$	3H9 $^{+0.025}_{0}$	3

MHS3-32D to 80D

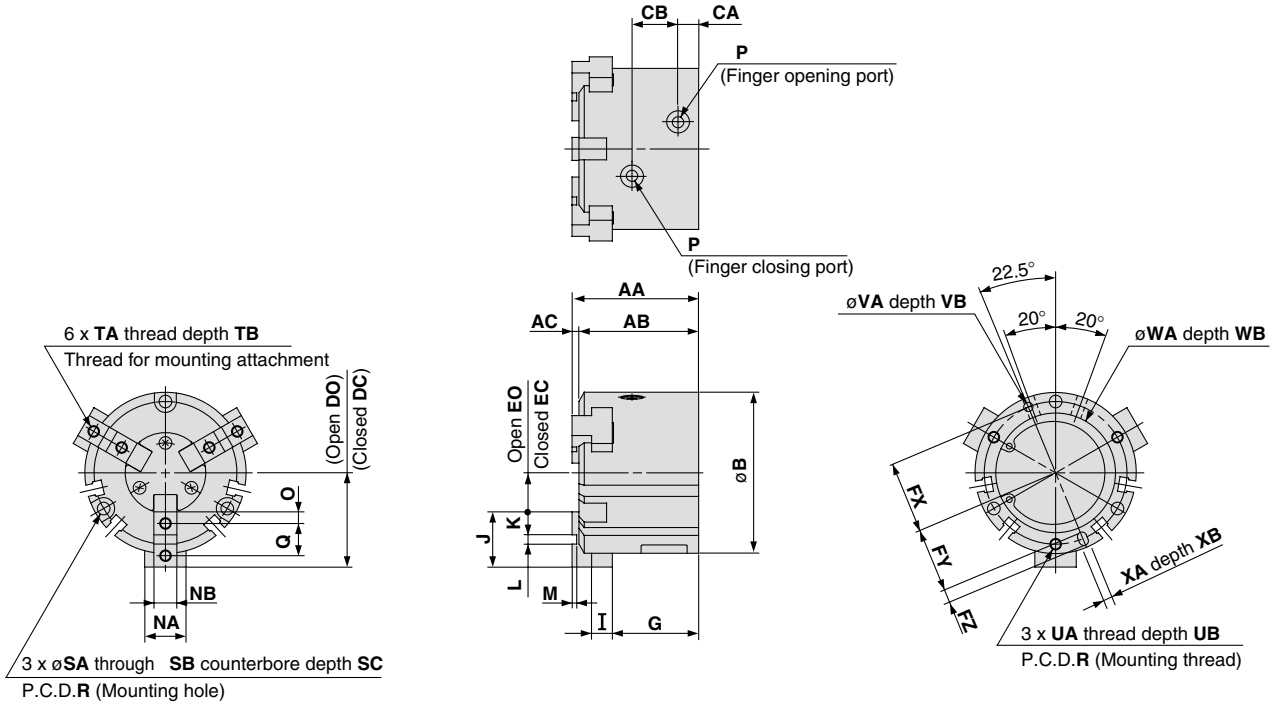

Auto switch mounting groove dimensions (4 locations)

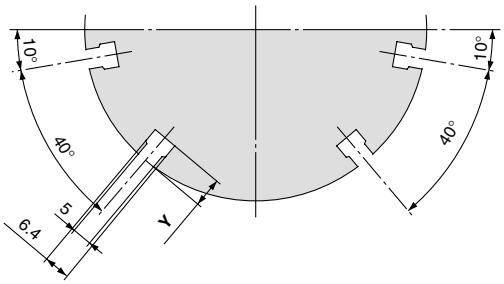

(mm)

Model	AA	AB	AC	B	CA	CB	DC	DO	EC	EO	FX	FY	FZ	G	I	J	K	L	M	NA	NB
MHS3-32D	44	41	3	52	8	16	28	32	8	12	22	19.5	5	30.5	6	20	9	$2H9^{+0.025}_{0}$	2	14	$8h9^{0}_{-0.036}$
MHS3-40D	47	44	3	62	9	17	31	35	10	14	26.5	23.5	6	32	7	21	9	$3H9^{+0.025}_{0}$	2	16	$8h9^{0}_{-0.036}$
MHS3-50D	55	52	3	70	9	20	35	41	11	17	31	28	6	37.5	9	24	10	$4H9^{+0.030}_{0}$	2	18	$10h9^{0}_{-0.036}$
MHS3-63D	66	62	4	86	12	22	43	51	15	23	38	34.5	7	44	11	28	11	$6H9^{+0.030}_{0}$	3	24	$12h9^{0}_{-0.043}$
MHS3-80D	82	77	5	106	13.5	27	53.5	63.5	21.5	31.5	47.5	43.5	8	56	12	32	12	$8H9^{+0.036}_{0}$	4	28	$14h9^{0}_{-0.043}$

Model	O	P	Q	R	SA	SB	SC	TA	TB	UA	UB	VA	VB	WA	WB	XA	XB	Y
MHS3-32D	4.5	M5 x 0.8	11	44	4.5	8	9	M4 x 0.7	8	M4 x 0.7	6	$3H9^{+0.025}_{0}$	3	$34H9^{+0.062}_{0}$	2	$3H9^{+0.025}_{0}$	3	6
MHS3-40D	4.5	M5 x 0.8	12	53	5.5	9.5	9	M4 x 0.7	8	M5 x 0.8	7.5	$4H9^{+0.030}_{0}$	4	$42H9^{+0.062}_{0}$	2	$4H9^{+0.030}_{0}$	4	8
MHS3-50D	5	M5 x 0.8	14	62	5.5	9.5	12	M5 x 0.8	10	M5 x 0.8	10	$4H9^{+0.030}_{0}$	4	$52H9^{+0.074}_{0}$	2	$4H9^{+0.030}_{0}$	4	7
MHS3-63D	5.5	M5 x 0.8	17	76	6.6	11	14	M5 x 0.8	10	M6 x 1	9	$5H9^{+0.030}_{0}$	5	$65H9^{+0.074}_{0}$	2.5	$5H9^{+0.030}_{0}$	5	7.5
MHS3-80D	6	Rc 1/8 (G 1/8, NPT 1/8)	20	95	6.6	11	19	M6 x 1	12	M6 x 1	12	$6H9^{+0.030}_{0}$	6	$82H9^{+0.087}_{0}$	3	$6H9^{+0.030}_{0}$	6	8

Dimensions

MHS3-100D/125D

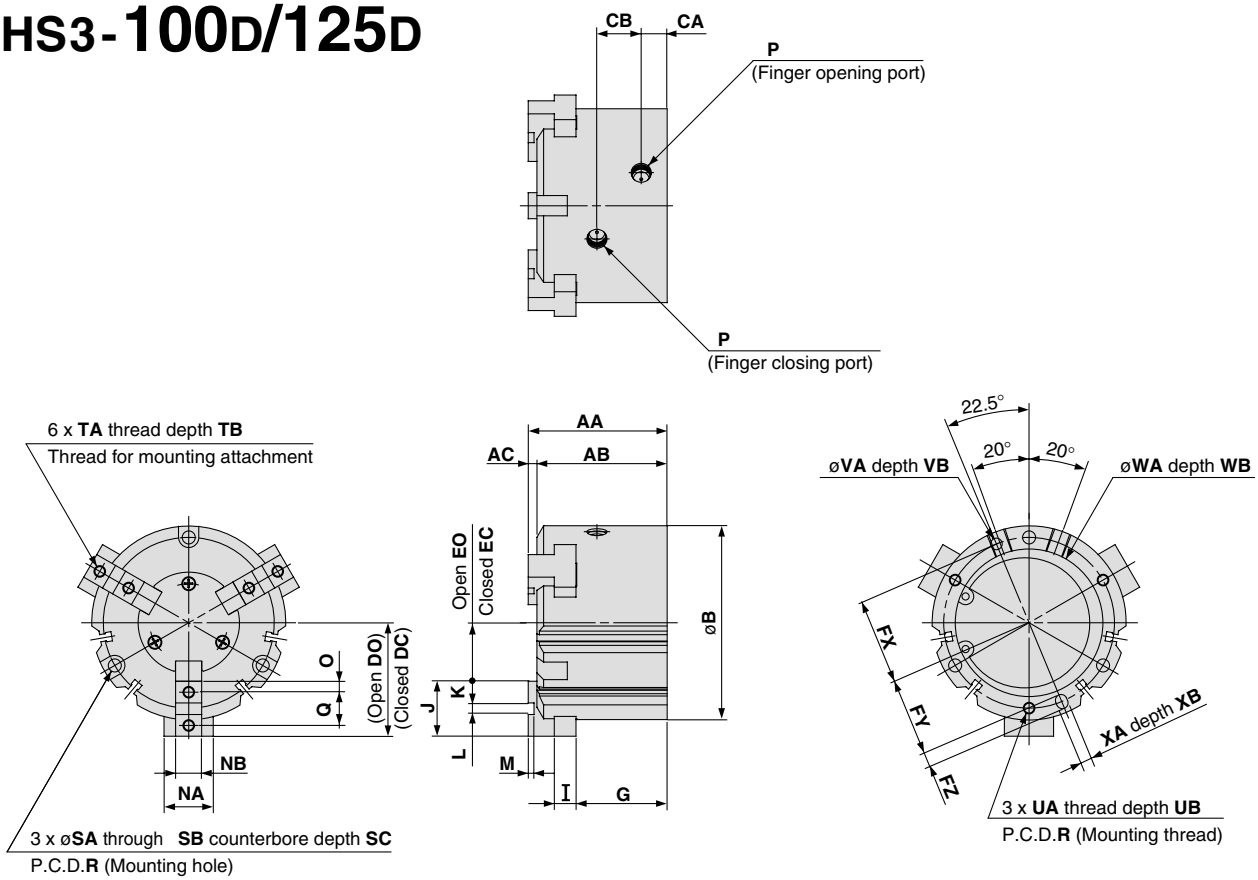

Auto switch mounting groove positions (4 locations)

MHS3-100D

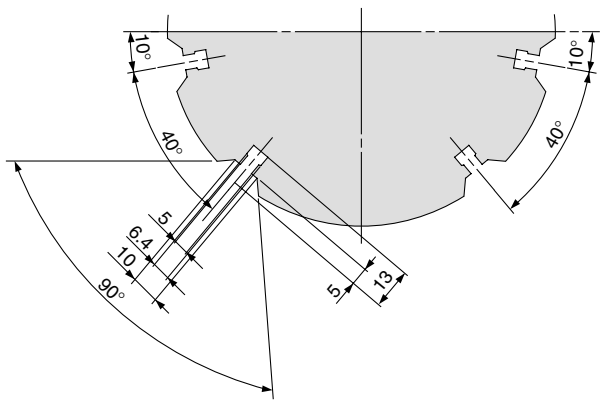

MHS3-125D

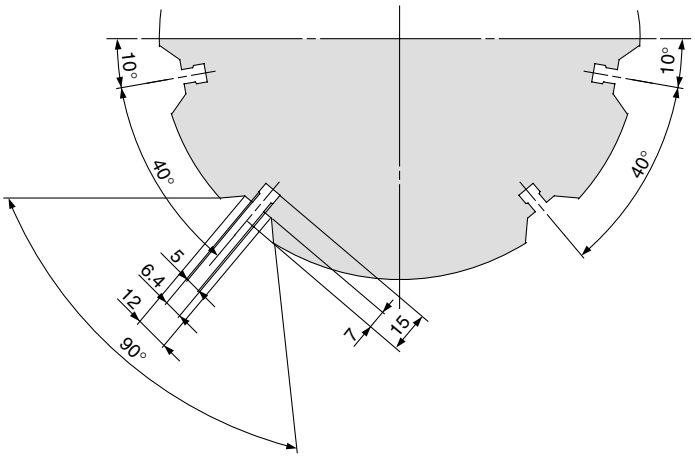

(mm)

Model	AA	AB	AC	B	CA	CB	DC	DO	EC	EO	FX	FY	FZ	G	I	J	K	L	M	NA	NB
MHS3-100D	96	90	6	134	18	30.6	66	78	28	40	59	54	10	63	15	38	15	8H9 $^{+0.036}_{0}$	4	34	18h9 $^{0}_{-0.043}$
MHS3-125D	122	114	8	166	23.5	38	82	98	30	46	74	68	12	84	18	52	21	10H9 $^{+0.036}_{0}$	6	40	22h9 $^{0}_{-0.052}$

Model	O	P	Q	R	SA	SB	SC	TA	TB	UA	UB	VA	VB	WA	WB	XA	XB
MHS3-100D	7.5	Rc 1/4 (G 1/4, NPT 1/4)	23	118	9	14	21	M8 x 1.25	16	M8 x 1.25	16	8H9 $^{+0.036}_{0}$	6	102H9 $^{+0.087}_{0}$	4	8H9 $^{+0.036}_{0}$	6
MHS3-125D	10.5	Rc 3/8 (G 3/8, NPT 3/8)	31	148	11	17.5	34	M10 x 1.5	20	M10 x 1.5	20	10H9 $^{+0.036}_{0}$	8	130H9 $^{+0.100}_{0}$	6	10H9 $^{+0.036}_{0}$	8

Series MHS3 Detailed Dimensions of Mounting Portion of End Plate

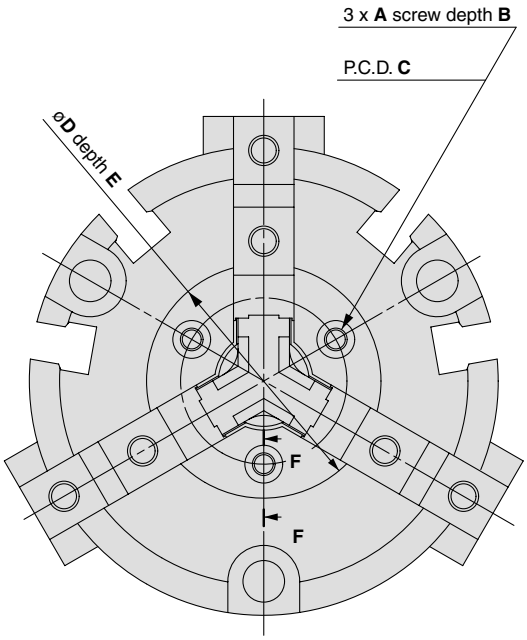

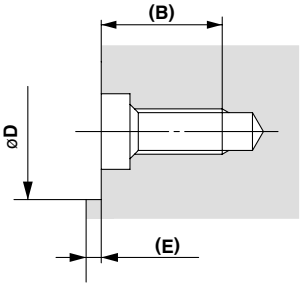

F-F

(mm)

Model	A	B	C	øD	E
MHS3-16D	M2 x 0.4	5.5	12.5	18H8 $^{+0.027}_{0}$	0.5
MHS3-20D		5.4	15	21H8 $^{+0.033}_{0}$	0.6
MHS3-25D			17	23H8 $^{+0.033}_{0}$	
MHS3-32D		5.2	21	27H8 $^{+0.033}_{0}$	0.8
MHS3-40D	M3 x 0.5	8	22	31H8 $^{+0.039}_{0}$	1
MHS3-50D			26	35H8 $^{+0.039}_{0}$	
MHS3-63D			33	42H8 $^{+0.039}_{0}$	
MHS3-80D	M4 x 0.7	9.5	40	52H8 $^{+0.046}_{0}$	1.5
MHS3-100D			54	70H8 $^{+0.046}_{0}$	
MHS3-125D			62	82H8 $^{+0.054}_{0}$	

Parallel Style Air Gripper
3-Finger Type with Dust Cover
Series MHSJ3
ø16, ø20, ø25, ø32, ø40, ø50, ø63, ø80

How to Order

MHSJ 3 – 32 □ D □ – M9BW □ – □

With dust cover

Number of fingers

3	3 fingers

Bore size

16	16 mm
20	20 mm
25	25 mm
32	32 mm
40	40 mm
50	50 mm
63	63 mm
80	80 mm

Port thread type

Symbol	Type	Cylinder bore
Nil	M thread	ø16 to ø63
	Rc	ø80
TN	NPT	
TF	G	

Action

D	Double acting

Dust cover type

Nil	Chloroprene rubber (CR)
F	Fluororubber (FKM)
S	Silicon rubber (Si)

Auto switch

Nil	Without auto switch (Built-in magnet)

∗For the applicable auto switch model, refer to the table below.

Number of auto switches

Nil	2 pcs.
S	1 pc.

Made to Order
Refer to page 563 for details.

Applicable Auto Switch/Refer to pages 761 to 809 for further information on auto switches.

Type	Special function	Electrical entry	Indicator light	Wiring (Output)	Load voltage DC	Load voltage AC	Auto switch model Perpendicular	Auto switch model In-line	Lead wire length (m)∗ 0.5 (Nil)	1 (M)	3 (L)	5 (Z)	Pre-wired connector	Applicable load
Solid state switch	——	Grommet	Yes	3-wire (NPN)	24 V	5 V, 12 V	—	M9NV	M9N	●	●	●	○	○	Relay, PLC
				3-wire (PNP)				M9PV	M9P	●	●	●	○	○	
				2-wire		12 V		M9BV	M9B	●	●	●	○	○	
	Diagnosis (2-color indication)			3-wire (NPN)		5 V, 12 V		M9NWV	M9NW	●	●	●	○	○	
				3-wire (PNP)				M9PWV	M9PW	●	●	●	○	○	
				2-wire		12 V		M9BWV	M9BW	●	●	●	○	○	
	Water resistant (2-color indication)			3-wire (NPN)		5 V, 12 V		M9NAV	M9NA	○	○	●	○	○	
				3-wire (PNP)				M9PAV	M9PA	○	○	●	○	○	
				2-wire		12 V		M9BAV	M9BA	○	○	●	○	○	

∗ Lead wire length symbols: 0.5 m ····· Nil (Example) M9NW
1 m ····· M (Example) M9NWM
3 m ····· L (Example) M9NWL
5 m ····· Z (Example) M9NWZ

∗ Auto switches marked with a "○" symbol are produced upon receipt of order.

Note 1) Take note of hysteresis with 2-color indication type switches. Refer to "Auto Switch Hysteresis" on page 606.
Note 2) Refer to pages 761 to 809 for further information on auto switches.

Models/Specifications

Model		MHSJ3-16D	MHSJ3-20D	MHSJ3-25D	MHSJ3-32D	MHSJ3-40D	MHSJ3-50D	MHSJ3-63D	MHSJ3-80D
Cylinder bore size (mm)		16	20	25	32	40	50	63	80
Fluid		Air							
Operating pressure (MPa)		0.2 to 0.6			0.1 to 0.6				
Ambient and fluid temperature (°C)		–10 to 60							
Repeatability (mm)		±0.01							
Max. operating frequency (c.p.m.)		120			60				30
Lubrication		Not required							
Action		Double acting							
Effective gripping force (N) at 0.5 MPa (Note 1)	**External grip**	9	21	36	62	97	155	280	400
	Internal grip	16	28	47	82	130	204	359	525
Opening/Closing stroke (mm) (dia.)		4	4	6	8	8	12	16	20
Mass (g)		95	150	230	440	620	1,050	1,800	3,200

Note 1) Values for ø16 to ø25 are with gripping point L = 20 mm, for ø32 to ø63 with gripping point L = 30 mm, and for ø80 with gripping point L = 50 mm. Refer to "Effective Gripping Force" data on pages 565 to 567 for the gripping force at each gripping position.

Made to Order
(Refer to pages 683 to 713 for details.)

Symbol	Specifications/Description
-X4	Heat resistance (100°C)
-X5	Fluororubber seal
-X50	Without magnet
-X53	EPDM seal/Fluorine grease
-X56	Axial ported
-X63	Fluorine grease
-X77A	Dust cover adhesion
-X77B	Dust cover adhesion (Finger part only)
-X78A	Dust cover caulking
-X78B	Dust cover caulking (Finger part only)
-X79	Grease for food

Refer to pages 604 to 611 for the specifications of products with auto switches.

- Auto switch installation examples and mounting positions
- Auto switch hysteresis
- Auto switch mounting
- Protrusion of auto switch from edge of body

Construction

Closed condition

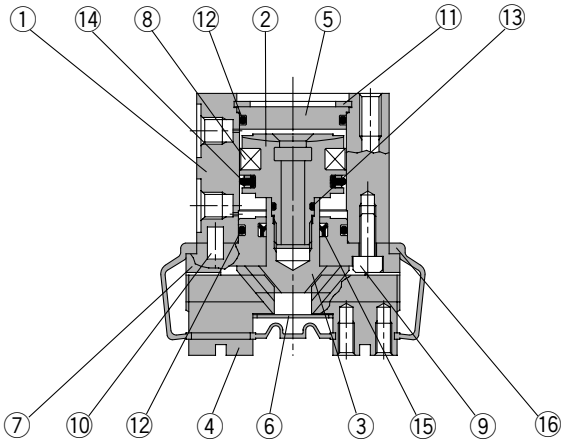

ø16 to ø25 Open condition

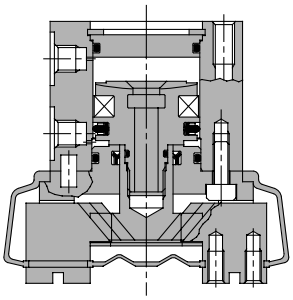

ø32 to ø80 Open condition

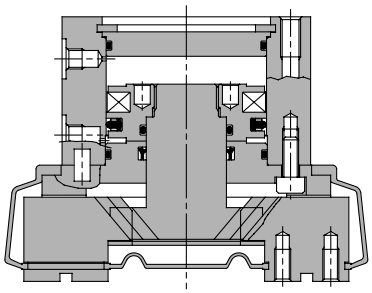

Component Parts

No.	Description	Material	Note
1	**Body**	Aluminum alloy	Hard anodized
2	**Piston**	ø16 to ø25: Stainless steel	
		ø32 to ø80: Aluminum alloy	Hard anodized
3	**Cam**	Carbon steel	Heat treated, Specially treated
4	**Finger**	Carbon steel	Heat treated, Specially treated
5	**Cap**	Aluminum alloy	Hard anodized
6	**End plate**	Stainless steel	
7	**Guide**	Aluminum alloy	Hard anodized

No.	Description	Material	Note
8	**Rubber magnet**	Synthetic rubber	
9	**Hexagon socket head bolt**	Carbon steel	Nickel plated
10	**Parallel pin**	Stainless steel	
11	**Type C retaining ring**	Carbon steel	Nickel plated
12	**Gasket**	NBR	
13	**Gasket**	NBR	
14	**Piston seal**	NBR	
15	**Rod seal**	NBR	

Replacement Parts

Description			MHSJ3-16D	MHSJ3-20D	MHSJ3-25D	MHSJ3-32D	Main parts
Seal kit			MHSJ16-PS	MHSJ20-PS	MHSJ25-PS	MHSJ32-PS	⑫⑬⑭⑮
Dust cover	Material	CR	MHSJ3-J16	MHSJ3-J20	MHSJ3-J25	MHSJ3-J32	⑯
		FKM	MHSJ3-J16F	MHSJ3-J20F	MHSJ3-J25F	MHSJ3-J32F	
		Si	MHSJ3-J16S	MHSJ3-J20S	MHSJ3-J25S	MHSJ3-J32S	
Finger			P3316054	P3316154	P3316254	P3316354	④
Cam (J)			P3316093	P3316193	P3316293	P3316393	③
Piston assembly			MHS-A1603	MHS-A2003	MHS-A2503	MHS-A3203	②⑧

Description			MHSJ3-40D	MHSJ3-50D	MHSJ3-63D	MHSJ3-80D	Main parts
Seal kit			MHSJ40-PS	MHSJ50-PS	MHSJ63-PS	MHSJ80-PS	⑫⑬⑭⑮
Dust cover	Material	CR	MHSJ3-J40	MHSJ3-J50	MHSJ3-J63	MHSJ3-J80	⑯
		FKM	MHSJ3-J40F	MHSJ3-J50F	MHSJ3-J63F	MHSJ3-J80F	
		Si	MHSJ3-J40S	MHSJ3-J50S	MHSJ3-J63S	MHSJ3-J80S	
Finger			P3316454	P3316554	P3316654	P3316754	④
Cam (J)			P3316493	P3316593	P3316693	P3316793	③
Piston assembly			MHS-A4003	MHS-A5003	MHS-A6303	MHS-A8003	②⑧

∗ Order 3 pieces of fingers for one unit.
Replacement part/Grease pack part no.: MH-G01 (30 g)

Gripping Point

- The workpiece gripping point distance should be within the gripping force ranges given for each pressure in the effective gripping force graphs below.
- If operated with the workpiece gripping point beyond the indicated ranges, an excessive offset load will be applied to the sliding section of the fingers, which can have an adverse effect on the service life of the product.

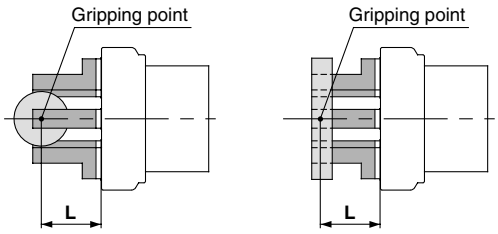

External grip Internal grip

L: Gripping point distance

Effective Gripping Force

- Indication of effective gripping force
  The effective gripping force shown in the graphs to the right is expressed as **F**, which is the thrust of one finger when all 3 of the fingers and attachments are in full contact with the workpiece as shown in the figure below.

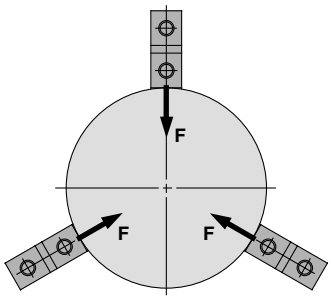

External grip

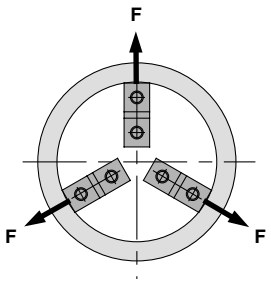

Internal grip

External Gripping Force

MHSJ3-16D

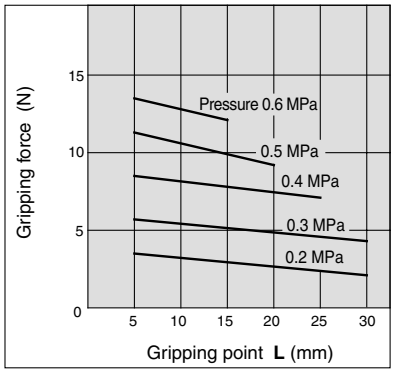

MHSJ3-20D

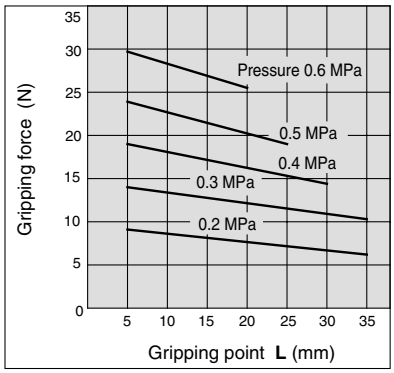

MHSJ3-25D

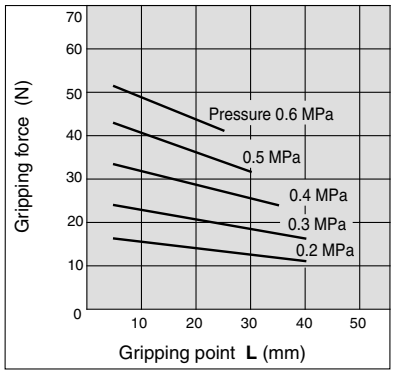

Internal Gripping Force

MHSJ3-16D

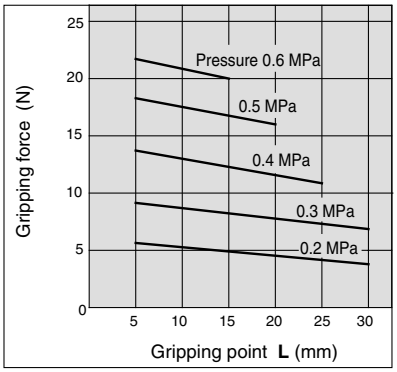

MHSJ3-20D

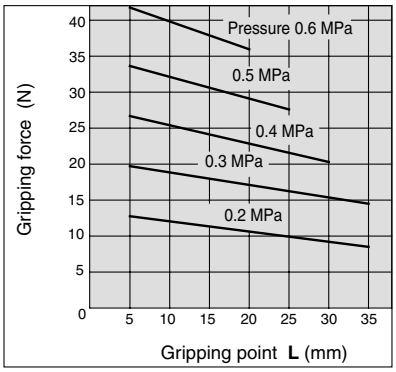

MHSJ3-25D

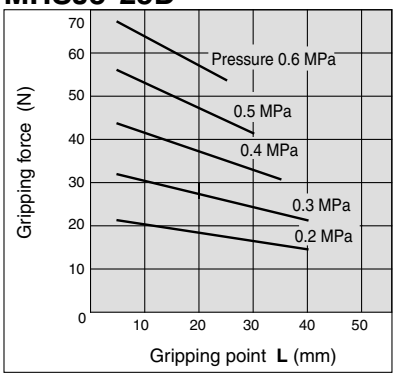

Effective Gripping Force

- Indication of effective gripping force
  The effective gripping force shown in the graphs to the right is expressed as **F**, which is the thrust of one finger when all 3 of the fingers and attachments are in full contact with the workpiece as shown in the figure below.

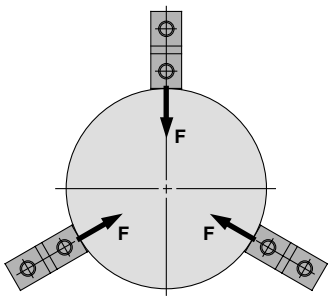

External grip

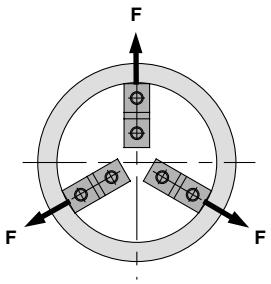

Internal grip

External Gripping Force

MHSJ3-32D

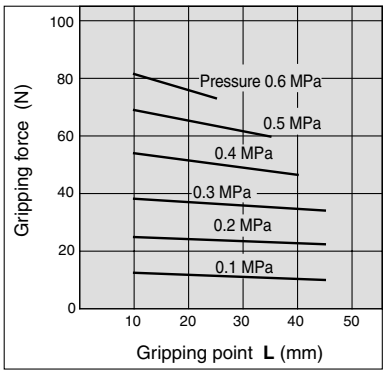

MHSJ3-40D

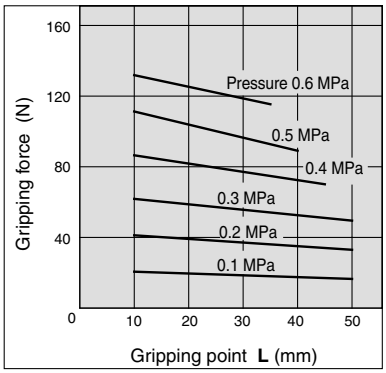

MHSJ3-50D

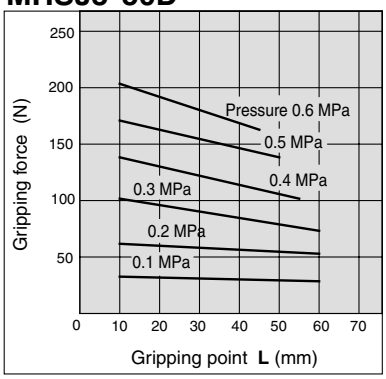

MHSJ3-63D

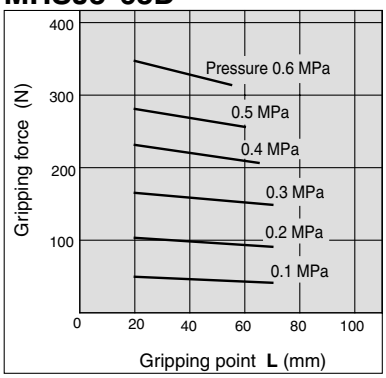

Internal Gripping Force

MHSJ3-32D

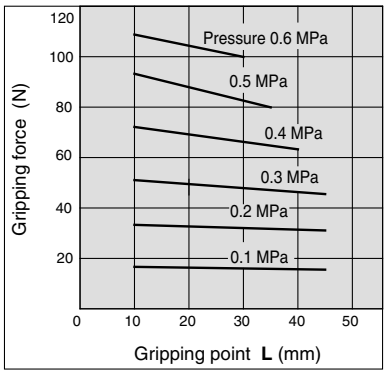

MHSJ3-40D

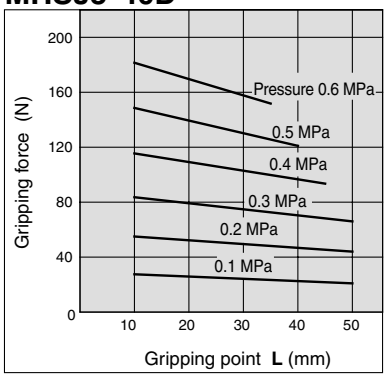

MHSJ3-50D

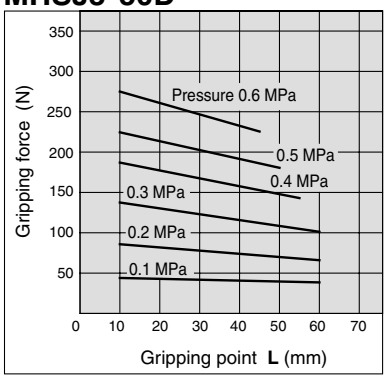

MHSJ3-63D

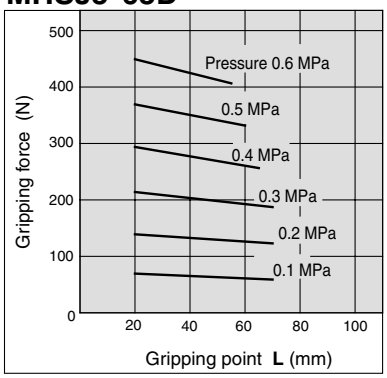

External Gripping Force

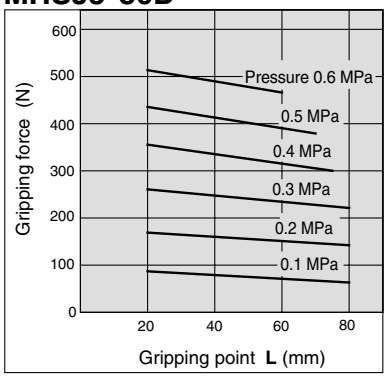

Internal Gripping Force

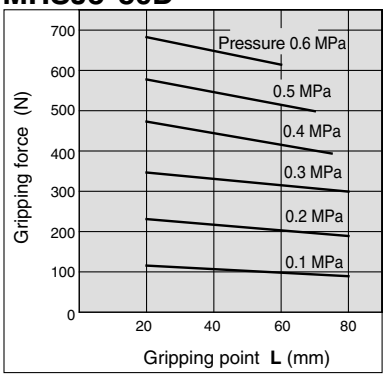

Dimensions

MHSJ3-16D to 25D

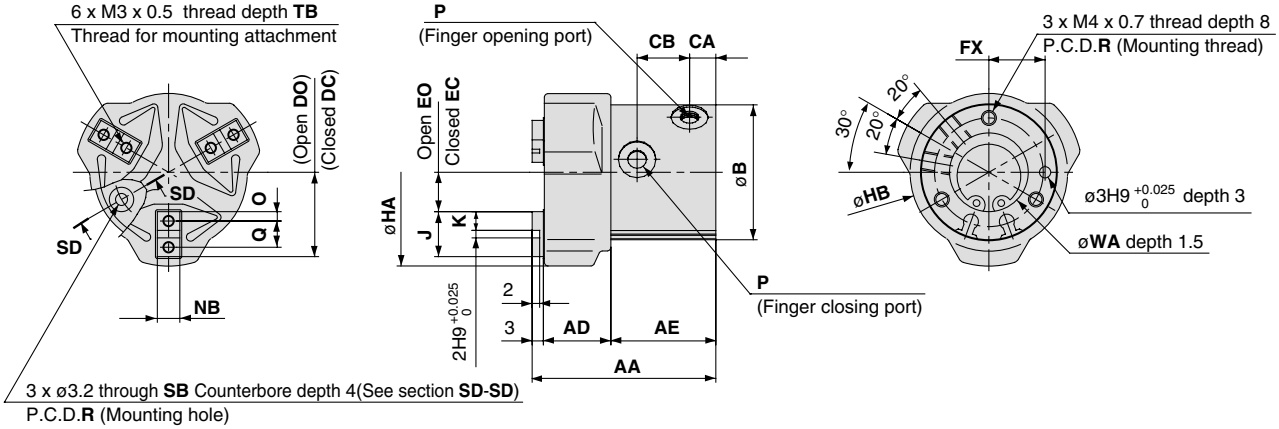

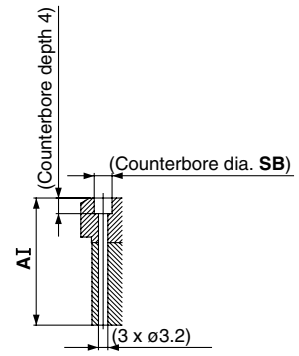

Section SD - SD

Auto switch mounting groove dimensions (2 locations)

MHSJ3-16D

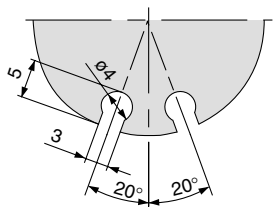

MHSJ3-20D

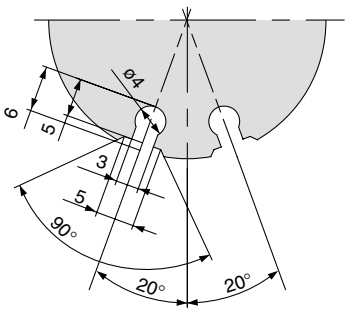

MHSJ3-25D

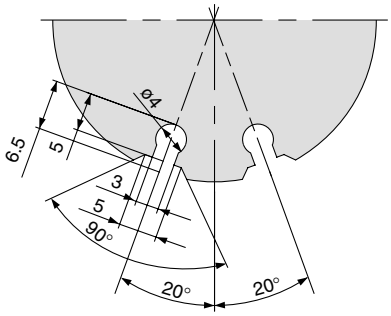

(mm)

Model	AA	AD	AE	AI	B	CA	CB	DC	DO	EC	EO	FX	HA	HB	J	K	NB	O	P	Q
MHSJ3-16D	46	16	27	39	30	7	14	17.5	19.5	7.5	9.5	12	44	36	10	4	5h9 $^{0}_{-0.030}$	2	M3 x 0.5	6
MHSJ3-20D	49	18	28	42	36	7	14	20	22	8	10	15	50	42	12	5	6h9 $^{0}_{-0.030}$	2.5	M5 x 0.8	7
MHSJ3-25D	55	20	32	47	42	7.5	17.5	23.5	26.5	9.5	12.5	18	59	50	14	6	6h9 $^{0}_{-0.030}$	3	M5 x 0.8	8

Model	R	SB	TB	WA
MHSJ3-16D	24	6	5	17H9 $^{+0.043}_{0}$
MHSJ3-20D	29	6.5	6	21H9 $^{+0.052}_{0}$
MHSJ3-25D	34	6.5	6	26H9 $^{+0.052}_{0}$

MHSJ3-32D to 80D

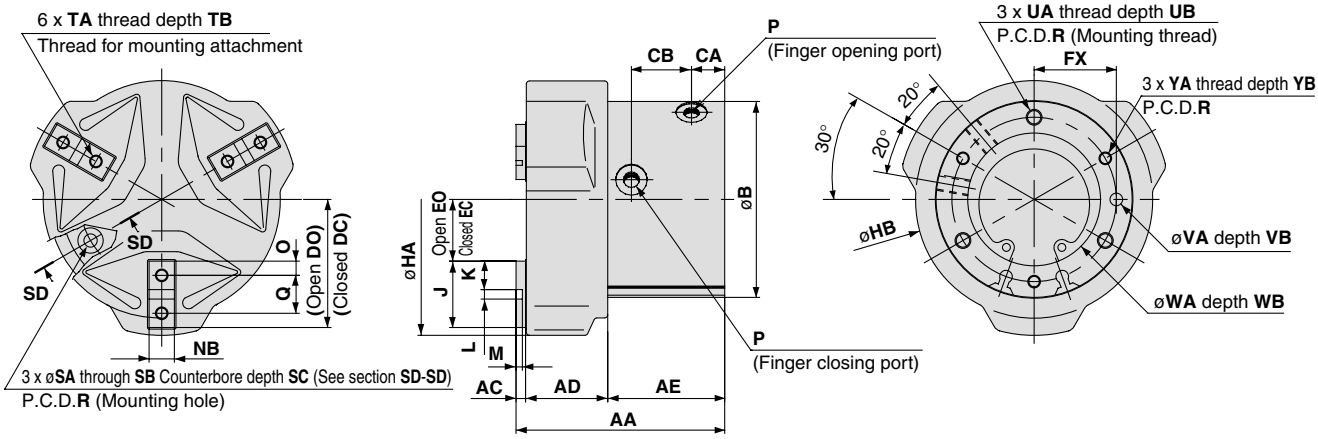

Auto switch mounting groove dimensions (2 locations)

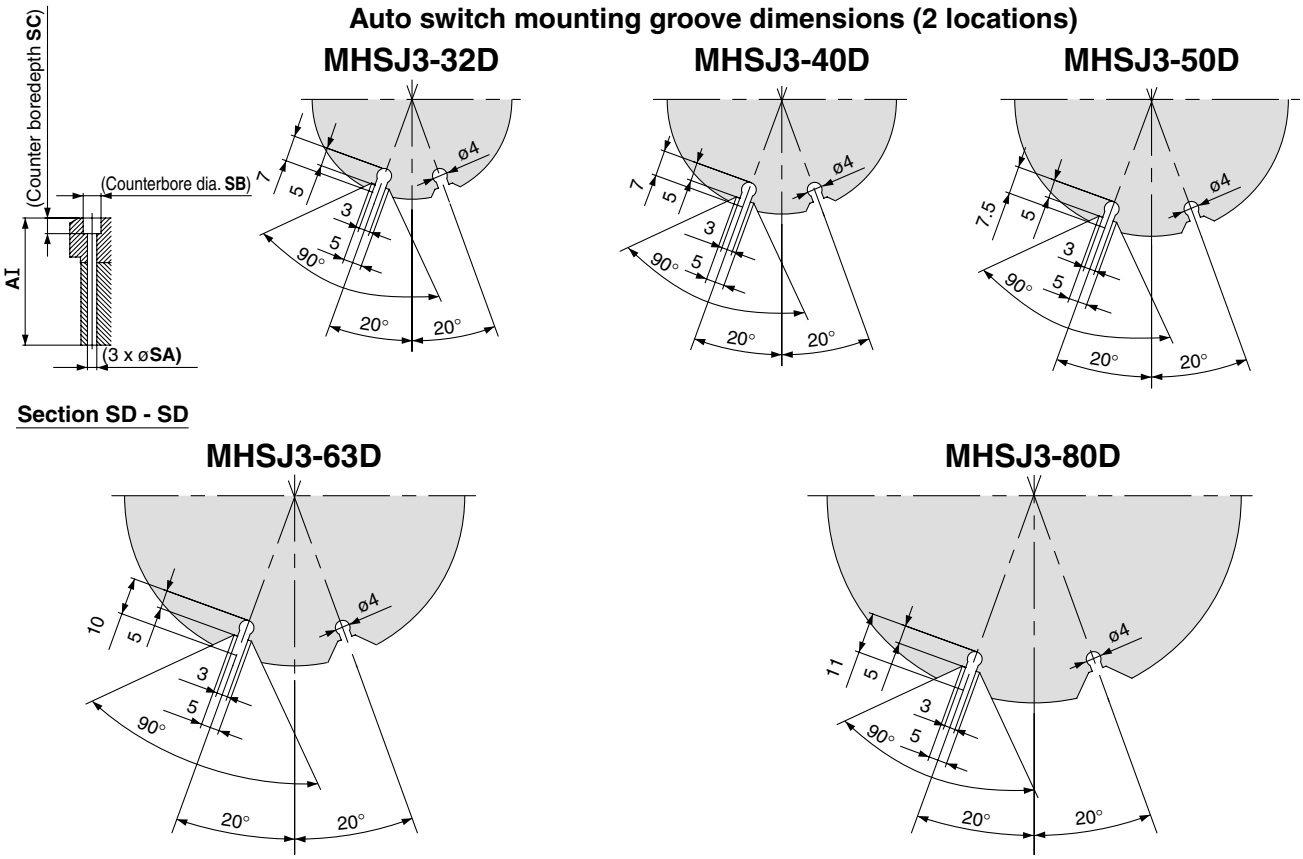

(mm)

Model	AA	AC	AD	AE	AI	B	CA	CB	DC	DO	EC	EO	FX	HA	HB	J	K	L	M	NB
MHSJ3-32D	63	3	24	36	54	54	9.5	19	31.5	35.5	11.5	15.5	22	76	65	20	9	2H9 $^{+0.025}_{0}$	2	8h9 $^{0}_{-0.036}$
MHSJ3-40D	66	3	26	37	57	62	10.5	19	36	40	15	19	26	86	75	21	9	3H9 $^{+0.025}_{0}$	2	8h9 $^{0}_{-0.036}$
MHSJ3-50D	80	3	31	46	70	74	11.5	26.5	42	48	18	24	32	103	88	24	10	4H9 $^{+0.030}_{0}$	2	10h9 $^{0}_{-0.036}$
MHSJ3-63D	91	4	37	50	79	92	13	28	51	59	23	31	40	125	106	28	11	6H9 $^{+0.030}_{0}$	3	12h9 $^{0}_{-0.043}$
MHSJ3-80D	108	5	46	57	93	112	14	31	63	73	31	41	50	158	130	32	12	8H9 $^{+0.036}_{0}$	4	14h9 $^{0}_{-0.043}$

Model	O	P	Q	R	SA	SB	SC	TA	TB	UA	UB	VA	VB	WA	WB	YA	YB
MHSJ3-32D	4.5	M5 x 0.8	11	44	4.2	8	7	M4 x 0.7	8	M5 x 0.8	10	4H9 $^{+0.030}_{0}$	4	34H9 $^{+0.062}_{0}$	2	M4 x 0.7	8
MHSJ3-40D	4.5	M5 x 0.8	12	52	4.2	8	7	M4 x 0.7	8	M5 x 0.8	10	4H9 $^{+0.030}_{0}$	4	42H9 $^{+0.062}_{0}$	2	M4 x 0.7	8
MHSJ3-50D	5	M5 x 0.8	14	63	5.1	9.5	8	M5 x 0.8	10	M6 x 1	12	5H9 $^{+0.030}_{0}$	5	52H9 $^{+0.074}_{0}$	2	M5 x 0.8	10
MHSJ3-63D	5.5	M5 x 0.8	17	78	6.6	11	8	M5 x 0.8	10	M8 x 1.25	16	6H9 $^{+0.030}_{0}$	6	65H9 $^{+0.074}_{0}$	2.5	M6 x 1	12
MHSJ3-80D	6	Rc 1/8 (G 1/8, NPT 1/8)	20	98	6.6	11	8	M6 x 1	12	M8 x 1.25	16	6H9 $^{+0.030}_{0}$	6	82H9 $^{+0.087}_{0}$	3	M6 x 1	12

Parallel Style Air Gripper 3-Finger Type
Through-hole Type
Series MHSH3
ø16, ø20, ø25, ø32, ø40, ø50, ø63, ø80

How to Order

MHSH □ 3 – 32 □ D □ □ – M9BW □ – □

Through-hole

Dust cover

Nil	None
J	With dust cover

Note) ø16, ø20 and ø25 are not available with dust cover.

Number of fingers

3	3 fingers

Bore size

16	16 mm	40	40 mm
20	20 mm	50	50 mm
25	25 mm	63	63 mm
32	32 mm	80	80 mm

Port thread type

Symbol	Type	Cylinder bore
Nil	M thread	ø16 to ø63
	Rc	
TN	NPT	ø80
TF	G	

Action

D	Double acting

Dust cover type (with dust cover only)

Nil	Chloroprene rubber (CR)
F	Fluororubber (FKM)
S	Silicon rubber (Si)

Center pusher

Nil	Without center pusher
A	Cylinder type
B	Spring type

Note) ø16, ø20 and ø25 are not available with center pusher.

Auto switch

Nil	Without auto switch (Built-in magnet)

∗For the applicable auto switch model, refer to the table below.

Number of auto switches

Nil	2 pcs.
S	1 pc.
n Note)	"n" pcs.

Note) Symbol entry examples when mounting auto switches on air gripper with cylinder type center pusher

1. Air gripper unit ····· 1 pc.
   Center pusher unit ····· 1 pc.
   MHSH3-32DA-M9N
   } Total of 2 pcs. → Nil
2. Air gripper unit ····· 2 pcs.
   Center pusher unit ····· 2 pcs.
   MHSH3-32DA-M9N4
   } Total of 4 pcs. → Enter "4"

Made to Order

Refer to page 571 for details.

Applicable Auto Switch /Refer to pages 761 to 809 for further information on auto switches.

Type	Special function	Electrical entry	Indicator light	Wiring (Output)	Load voltage DC	Load voltage AC	Auto switch model Perpendicular	Auto switch model In-line	Lead wire length (m)∗ 0.5 (Nil)	1 (M)	3 (L)	5 (Z)	Pre-wired connector	Applicable load	
Solid state switch	—	Grommet	Yes	3-wire (NPN)	24 V	5 V, 12 V	—	M9NV	M9N	●	●	●	○	○	IC circuit	Relay, PLC
				3-wire (PNP)				M9PV	M9P	●	●	●	○	○		
				2-wire		12 V		M9BV	M9B	●	●	●	○	○	—	
	Diagnostic (2-color indication)			3-wire (NPN)		5 V, 12 V		M9NWV	M9NW	●	●	●	○	○	IC circuit	
				3-wire (PNP)				M9PWV	M9PW	●	●	●	○	○		
				2-wire		12 V		M9BWV	M9BW	●	●	●	○	○	—	
	Water resistant (2-color indication)			3-wire (NPN)		5 V, 12 V		M9NAV	M9NA	○	○	●	○	○	IC circuit	
				3-wire (PNP)				M9PAV	M9PA	○	○	●	○	○		
				2-wire		12 V		M9BAV	M9BA	○	○	●	○	○	—	

∗ Lead wire length symbols: 0.5 m ····· Nil (Example) M9NW
1 m ····· M (Example) M9NWM
3 m ····· L (Example) M9NWL
5 m ····· Z (Example) M9NWZ

∗ Auto switches marked with a "○" symbol are produced upon receipt of order.

Note 1) Take note of hysteresis with 2-color indication type switches.
Refer to "Auto Switch Hysteresis" on page 606.
Note 2) Refer to pages 761 to 809 for further information on auto switches.

Center pusher assembly

MHSH 3 – A 50 A – M9BW □ – □

Through-hole

Number of fingers

3	3 fingers

Center pusher assembly

Bore size

32	32 mm
40	40 mm
50	50 mm
63	63 mm
80	80 mm

Center pusher

A	Cylinder type
B	Spring type

Auto switch (Cylinder type only)

Nil	Without auto switch (Built-in magnet)

∗For the applicable auto switch model, refer to the table below.

Number of auto switches

Nil	2 pcs.
S	1 pc.

Made to Order

Refer to page 571 for details.

Applicable Auto Switch /Refer to pages 761 to 809 for further information on auto switches.

Type	Special function	Electrical entry	Indicator light	Wiring (Output)	Load voltage DC	Load voltage AC	Auto switch model Perpendicular	Auto switch model In-line	Lead wire length (m)∗ 0.5 (Nil)	1 (M)	3 (L)	5 (Z)	Pre-wired connector	Applicable load	
Solid state switch	—	Grommet	Yes	3-wire (NPN)	24 V	5 V, 12 V	—	M9NV	M9N	●	●	●	○	○	IC circuit	Relay, PLC
				3-wire (PNP)				M9PV	M9P	●	●	●	○	○		
				2-wire		12 V		M9BV	M9B	●	●	●	○	○	—	
	Diagnostic (2-color indication)			3-wire (NPN)		5 V, 12 V		M9NWV	M9NW	●	●	●	○	○	IC circuit	
				3-wire (PNP)				M9PWV	M9PW	●	●	●	○	○		
				2-wire		12 V		M9BWV	M9BW	●	●	●	○	○	—	
	Water resistant (2-color indication)			3-wire (NPN)		5 V, 12 V		M9NAV	M9NA	○	○	●	○	○	IC circuit	
				3-wire (PNP)				M9PAV	M9PA	○	○	●	○	○		
				2-wire		12 V		M9BAV	M9BA	○	○	●	○	○	—	

∗ Lead wire length symbols: 0.5 m ····· Nil (Example) M9NW
1 m ····· M (Example) M9NWM
3 m ····· L (Example) M9NWL
5 m ····· Z (Example) M9NWZ

∗ Auto switches marked with a "○" symbol are produced upon receipt of order.

Note 1) Take note of hysteresis with 2-color indication type switches.
Refer to "Auto Switch Hysteresis" on page 607.
Note 2) Refer to pages 761 to 809 for further information on auto switches.

Model/Specifications

Without center pusher

Center pusher/Cylinder type

Center pusher/Spring type

Air Gripper Specifications

Model		MHSH3-16D	MHSH3-20D	MHSH3-25D	MHSH3-32D	MHSH3-40D	MHSH3-50D	MHSH3-63D	MHSH3-80D
Cylinder bore size (mm)		16	20	25	32	40	50	63	80
Fluid		Air							
Operating pressure (MPa)		0.2 to 0.6			0.1 to 0.6				
Ambient and fluid temperature (°C)		– 10 to 60							
Repeatability (mm)		±0.01							
Max. operating frequency (c.p.m.)		120			60				30
Lubrication		Not reguired							
Action		Double acting							
Effective gripping force N (Note 1) at 0.5 MPa	External hold	9	21	36	62	97	155	280	400
	Internal hold	15	26	45	77	118	187	329	490
Through hole diameter (mm)		ø3H10 $^{+0.040}_{0}$	ø3H10 $^{+0.040}_{0}$	ø4H10 $^{+0.048}_{0}$	ø6H10 $^{+0.048}_{0}$	ø10H10 $^{+0.058}_{0}$	ø12H10 $^{+0.070}_{0}$	ø16H10 $^{+0.070}_{0}$	ø20H10 $^{+0.084}_{0}$
Opening/Closing stroke (dia.) (mm)		4	4	6	8	8	12	16	20
Mass (g)		90	140	220	410	570	970	1,650	2,920

Note 1) Values for ø16 to ø25 are with gripping point L = 20 mm, for ø32 to ø63 with gripping point L = 30 mm, and for ø80 with gripping point L = 50 mm.
Refer to "Effective Gripping Force" data on pages 574 to 577 for the gripping force at each gripping position.

Center Pusher (Cylinder type) Specifications

Model		MHSH3-32DA	MHSH3-40DA	MHSH3-50DA	MHSH3-63DA	MHSH3-80DA
Pusher cylinder bore size (mm)		12	20	25	32	40
Fluid		Air				
Operating pressure (MPa)		0.2 to 0.6	0.1 to 0.6			
Ambient and fluid temperature (°C)		– 10 to 60				
Pusher maximum operating frequency (c.p.m.)		60				30
Lubrication		Not reguired				
Action		Double acting				
Pusher stroke (mm)		5	5	10	10	15
Pusher thrust (N) at 0.5 MPa	Extention	45	130	204	335	524
Mass (g)		530	770	1,330	2,300	4,000

Center Pusher (Spring type) Specifications

Model	MHSH3-32DB	MHSH3-40DB	MHSH3-50DB	MHSH3-63DB	MHSH3-80DB
Pusher stroke (mm)	5	5	10	10	15
Pusher spring force (N)	6 to 10	11 to 15	20 to 25	29 to 34	49 to 59
Mass (g)	500	740	1,290	2,250	4,000

Mass

	ø32	ø40	ø50	ø63	ø80
Through-hole with dust cover **MHSHJ3-□D**	430	600	1,020	1,710	3,040
Center pusher (cylinder type) with dust cover **MHSHJ3-□DA**	550	800	1,380	2.360	4,120
Center pusher (spring type) with dust cover **MHSHJ3-□DB**	520	770	1,340	2.310	4.120

Made to Order

(Refer to pages 683 to 713 for details.)

Symbol	Specifications/Description
-X4	Heat resistance (100°C)
-X5	Fluororubber seal
-X50	Without magnet
-X53	EPDM seal/Fluorine grease
-X56	Axial ported
-X63	Fluorine grease
-X77A	Dust cover adhesion
-X77B	Dust cover adhesion (Finger part only)
-X78A	Dust cover caulking
-X78B	Dust cover caulking (Finger part only)
-X79	Grease for food

Refer to pages 604 to 611 for the specifications of products with auto switches.

- Auto switch installation examples and mounting positions
- Auto switch hysteresis
- Auto switch mounting
- Protrusion of auto switch from edge of body

Construction

Closed condition

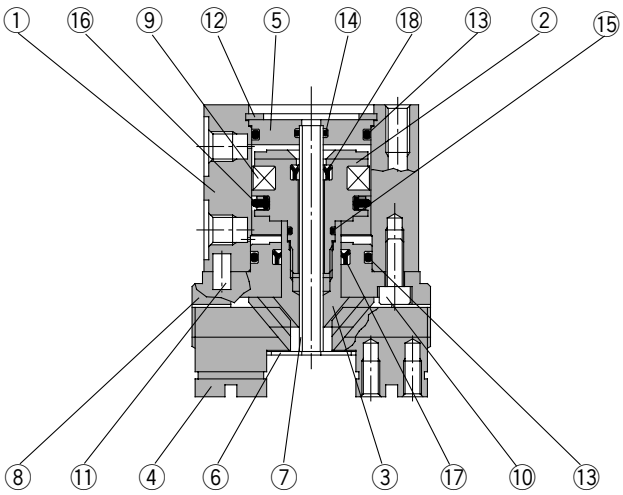

ø16 to ø25 Open condition

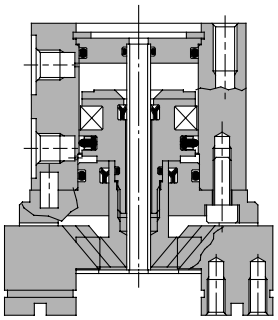

ø32 to ø80 Open condition

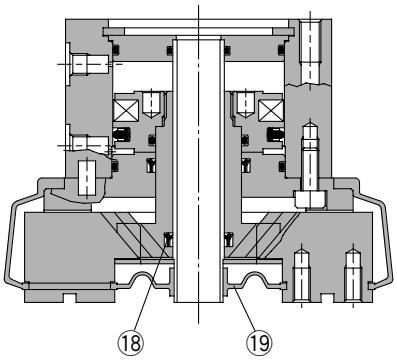

Component Parts

No.	Description	Material	Note
1	**Body**	Aluminum alloy	Hard anodized
2	**Piston**	ø16 to ø25: Stainless steel	
		ø32 to ø80: Aluminum alloy	Hard anodized
3	**Cam (A)**	Carbon steel	Heat treated, Specially treated
4	**Finger**	Carbon steel	Heat treated, Specially treated
5	**Cap (A)**	Aluminum alloy	Hard anodized
6	**End plate (A)**	Stainless steel	
7	**Tubing**	Stainless steel	
8	**Guide**	Aluminum alloy	Hard anodized
9	**Rubber magnet**	Synthetic rubber	
10	**Hexagon socket head bolt**	Carbon steel	Nickel plated
11	**Parallel pin**	Stainless steel	
12	**Type C retaining ring**	Carbon steel	Nickel plated

No.	Description	Material	Note
13	**Gasket**	NBR	
14	**Gasket**	NBR	
15	**Gasket**	NBR	
16	**Piston seal**	NBR	
17	**Rod seal**	NBR	
18	**Rod seal**	NBR	

Replacement Parts

Description			MHSH3-16D	MHSH3-20D	MHSH3-25D	MHSH3-32D MHSHJ3-32D	Main parts
Seal kit			MHSH16-PS	MHSH20-PS	MHSH25-PS	MHSH32-PS	⑬⑭⑮⑯⑰⑱
Dust cover	Material	CR	—	—	—	MHSHJ3-J32	⑲
		FKM				MHSHJ3-J32F	
		Si				MHSHJ3-J32S	
Finger			P3316054	P3316154	P3316254	P3316354	④
Cam (A)			P3316053	P3316153	P3316253	P3316353	③
Piston assembly			MHS-A1603	MHS-A2003	MHS-A2503	MHS-A3203	②⑨

Description			MHSH3-40D MHSHJ3-40D	MHSH3-50D MHSHJ3-50D	MHSH3-63D MHSHJ3-63D	MHSH3-80D MHSHJ3-80D	Main parts
Seal kit			MHSH40-PS	MHSH50-PS	MHSH63-PS	MHSH80-PS	⑬⑭⑮⑯⑰⑱
Dust cover	Material	CR	MHSHJ3-J40	MHSHJ3-J50	MHSHJ3-J63	MHSHJ3-J80	⑲
		FKM	MHSHJ3-J40F	MHSHJ3-J50F	MHSHJ3-J63F	MHSHJ3-J80F	
		Si	MHSHJ3-J40S	MHSHJ3-J50S	MHSHJ3-J63S	MHSHJ3-J80S	
Finger			P3316454	P3316554	P3316654	P3316754	④
Cam (A)			P3316453	P3316553	P3316653	P3316753	③
Piston assembly			MHS-A4003	MHS-A5003	MHS-A6303	MHS-A8003	②⑨

∗ Order 3 pieces of fingers for one unit.
Replacement part/Grease pack part no.: MH-G01 (30 g)

Construction

Center pusher/Cylinder type

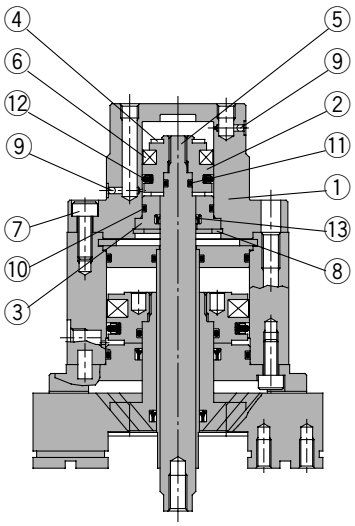

Component Parts

No.	Description	Material	Note
1	**Push holder (P)**	Aluminum alloy	Hard anodized
2	**Piston (P)**	Aluminum alloy	Hard anodized
3	**Rod holder**	Aluminum alloy	Hard anodized
4	**Bumper**	Urethane rubber	
5	**Push rod (P)**	Stainless steel	Hard chromed
6	**Rubber magnet**	Synthetic rubber	
7	**Hexagon socket head bolt**	Carbon steel	Nickel plated
8	**Type C retaining ring**	Carbon steel	Nickel plated
9	**Steel balls**	Stainless steel	
10	**Gasket**	NBR	
11	**Gasket**	NBR	
12	**Piston seal**	NBR	
13	**Rod seal**	NBR	

Replacement Parts: Seal Kit (Center pusher/Cylinder type)

Part no.					Description
MHSH3-A32A	**MHSH3-A40A**	**MHSH3-A50A**	**MHSH3-A63A**	**MHSH3-A80A**	
MHSH32A-PS	MHSH40A-PS	MHSH50A-PS	MHSH63A-PS	MHSH80A-PS	A set of the above nos. ⑩, ⑪, ⑫ & ⑬

∗ Seal kits are sets consisting of items ⑩, ⑪, ⑫ and ⑬, and can be ordered using the kit number for each cylinder bore size.
Replacement part/Grease pack part no.: MH-G01 (30 g)

Construction

Center pusher/Spring type

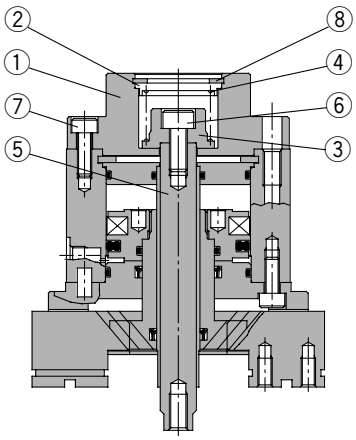

Component Parts

No.	Description	Material	Note
1	**Push holder (S)**	Aluminum alloy	Hard anodized
2	**Cap (S)**	Stainless steel	
3	**Spring holder**	Stainless steel	
4	**Spring**	Stainless steel	
5	**Push rod (S)**	Stainless steel	Hard chromed
6	**Hexagon socket head bolt**	Carbon steel	Nickel plated
7	**Hexagon socket head bolt**	Carbon steel	Nickel plated
8	**Type C retaining ring**	Carbon steel	Nickel plated

Gripping Point

- The workpiece gripping point distance should be within the gripping force ranges given for each pressure in the effective gripping force graphs below.
- If operated with the workpiece gripping point beyond the indicated ranges, an excessive offset load will be applied to the sliding section of the fingers, which can have an adverse effect on the service life of the product.

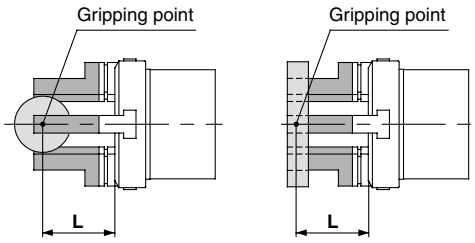

External grip Internal grip

L: Gripping point distance

Effective Gripping Force

- Indication of effective gripping force
  The effective gripping force shown in the graphs to the right is expressed as **F**, which is the thrust of one finger when all 3 of the fingers and attachments are in full contact with the workpiece as shown in the figure below.

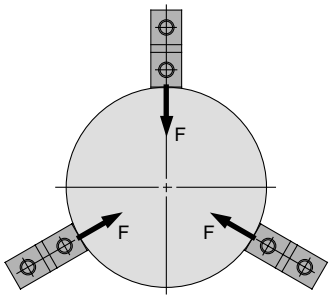

External grip

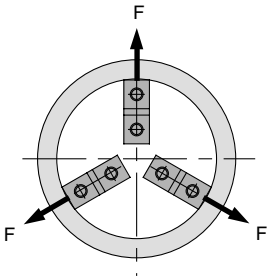

Internal grip

External Gripping Force

MHSH3-16D

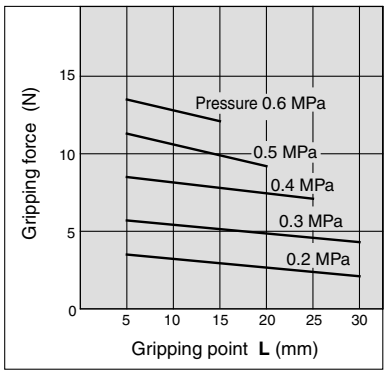

MHSH3-20D

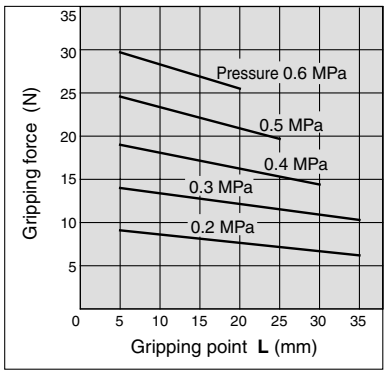

MHSH3-25D

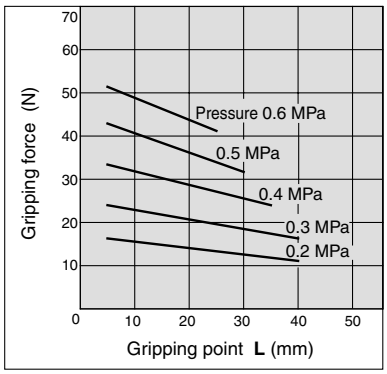

Internal Gripping Force

MHSH3-16D

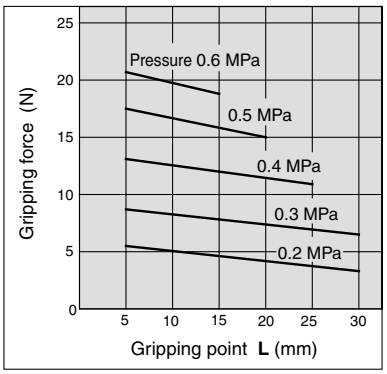

MHSH3-20D

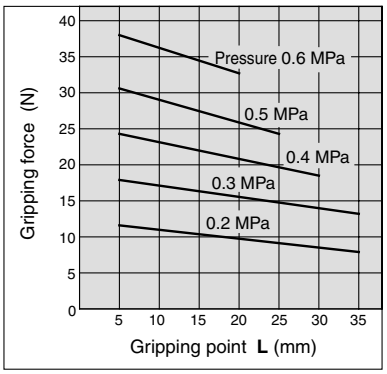

MHSH3-25D

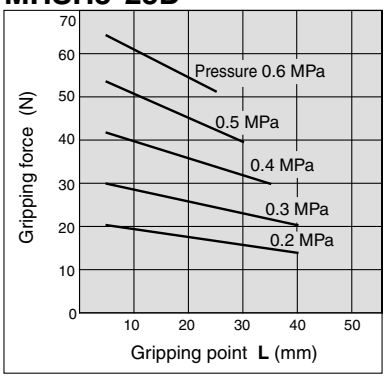

Effective Gripping Force

- Indication of effective gripping force
  The effective gripping force shown in the graphs to the right is expressed as **F**, which is the thrust of one finger when all 3 of the fingers and attachments are in full contact with the workpiece as shown in the figure below.

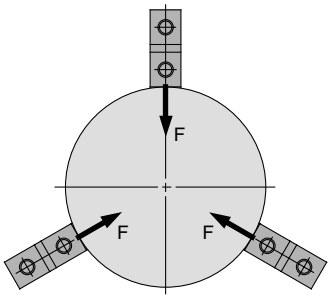

External grip

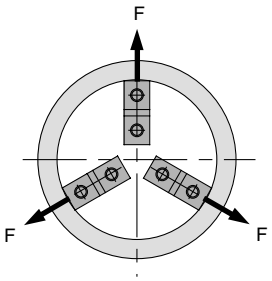

Internal grip

External Gripping Force

MHSH3-32D

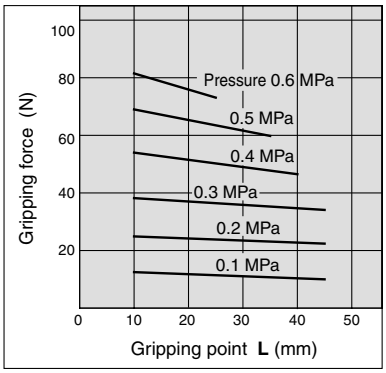

MHSH3-40D

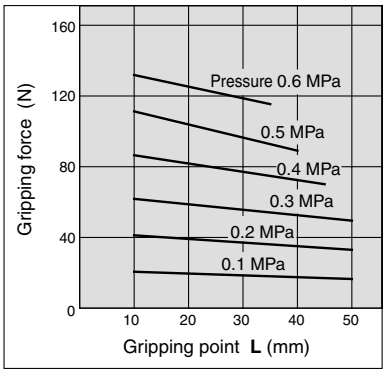

MHSH3-50D

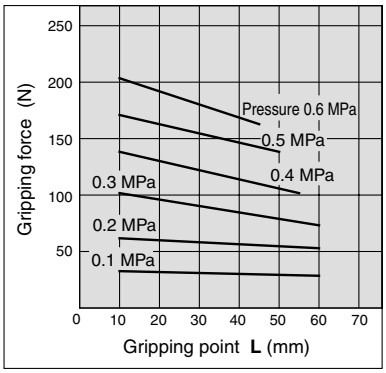

MHSH3-63D

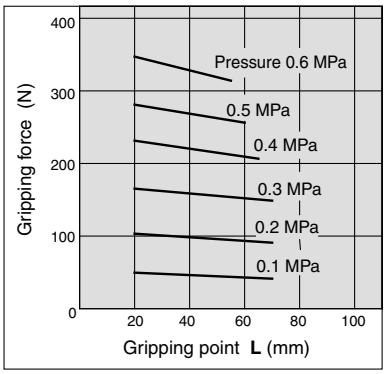

Internal Gripping Force

MHSH3-32D

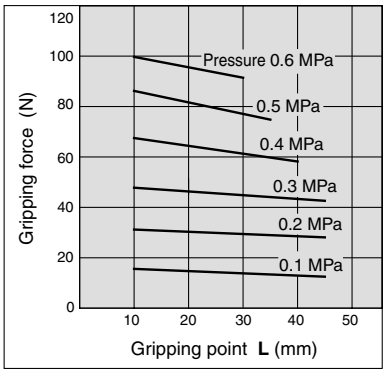

MHSH3-40D

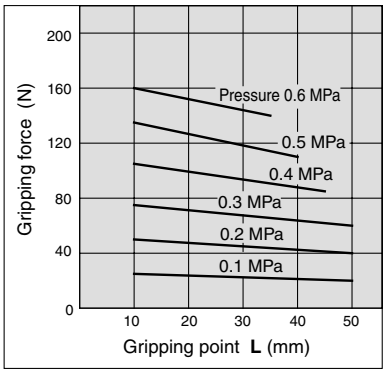

MHSH3-50D

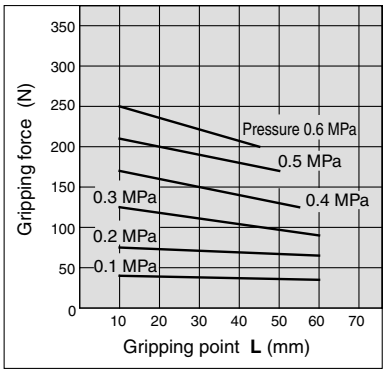

MHSH3-63D

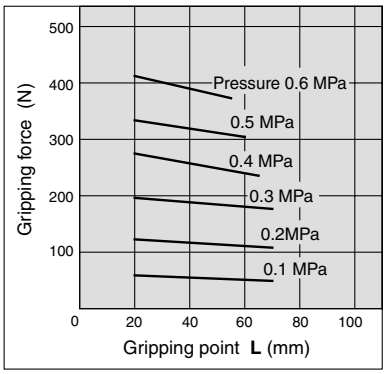

Effective Gripping Force

• Indication of effective gripping force
The effective gripping force shown in the graphs to the right is expressed as **F**, which is the thrust of one finger when all 3 of the fingers and attachments are in full contact with the workpiece as shown in the figure below.

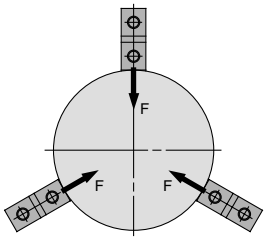

External grip

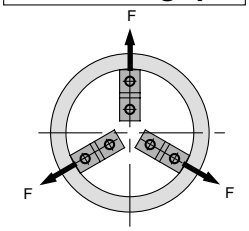

Internal grip

External Gripping Force

MHSH3-80D

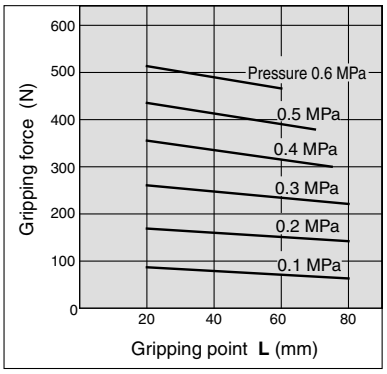

Internal Gripping Force

MHSH3-80D

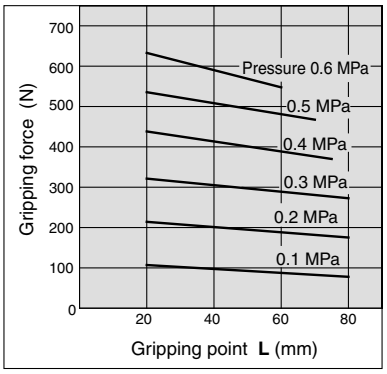

Effective Thrust of Center Pusher

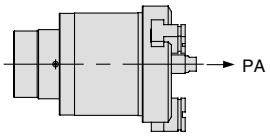

PA: Pusher thrust

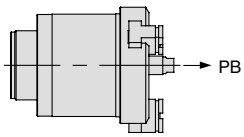

PB: Spring force

Cylinder Type Note)

MHSH3-32DA

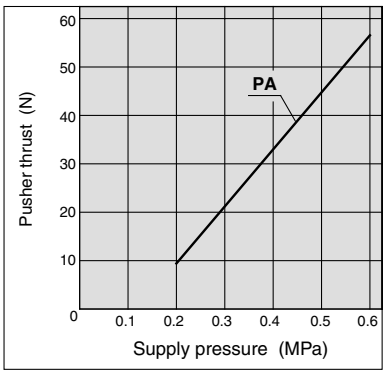

MHSH3-40DA

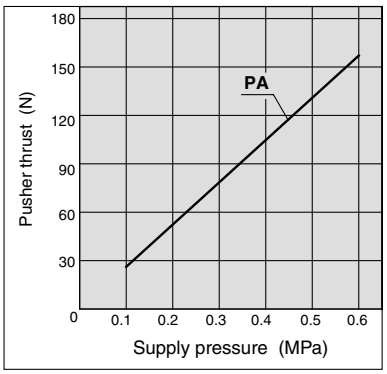

Spring Type

MHSH3-32DB

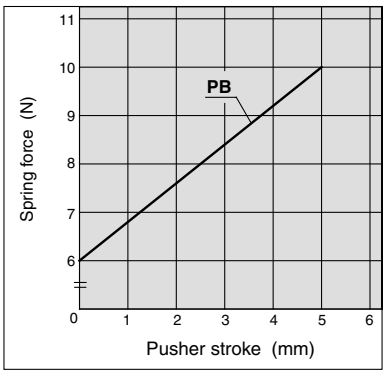

MHSH3-40DB

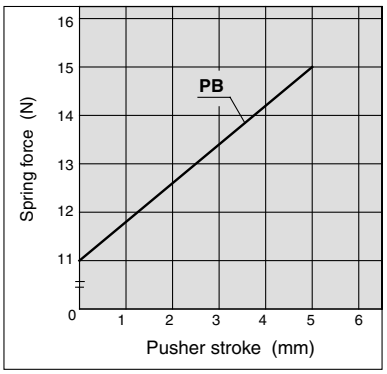

Note) The thrust of the cylinder type is on extension of the push rod.

Effective Thrust of Center Pusher

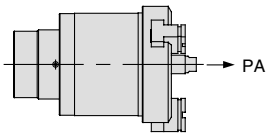

PA: Pusher thrust

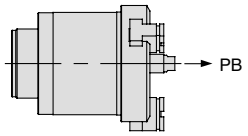

PB: Spring force

Cylinder Type Note)

MHSH3-50DA

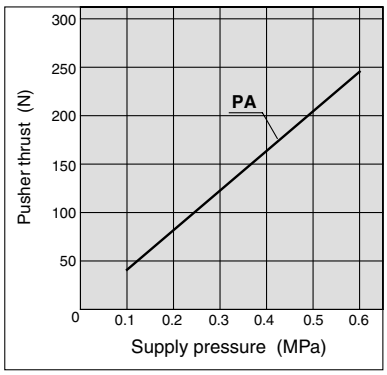

MHSH3-63DA

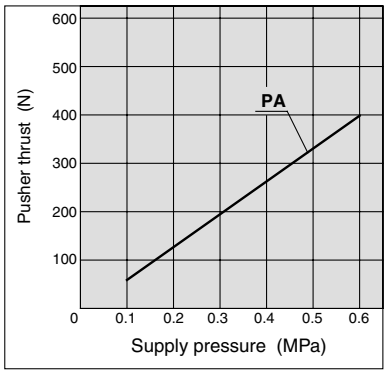

MHSH3-80DA

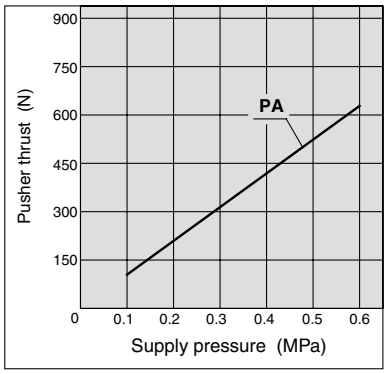

Spring Type

MHSH3-50DB

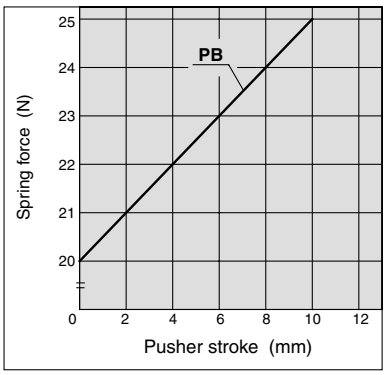

MHSH3-63DB

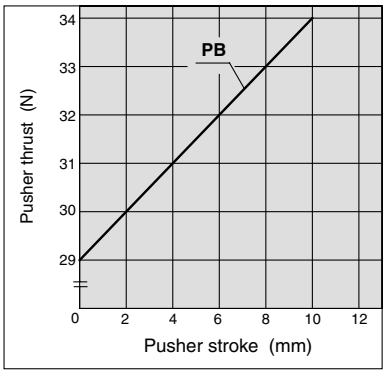

MHSH3-80DB

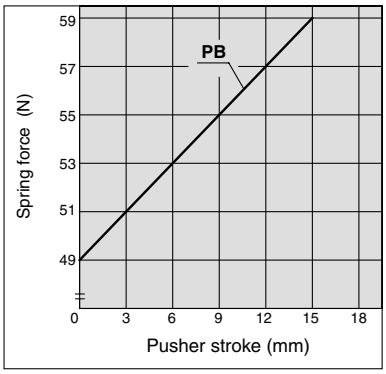

Note) The thrust of the cylinder type is on extension of the push rod.

Dimensions

MHSH3-16D to 25D

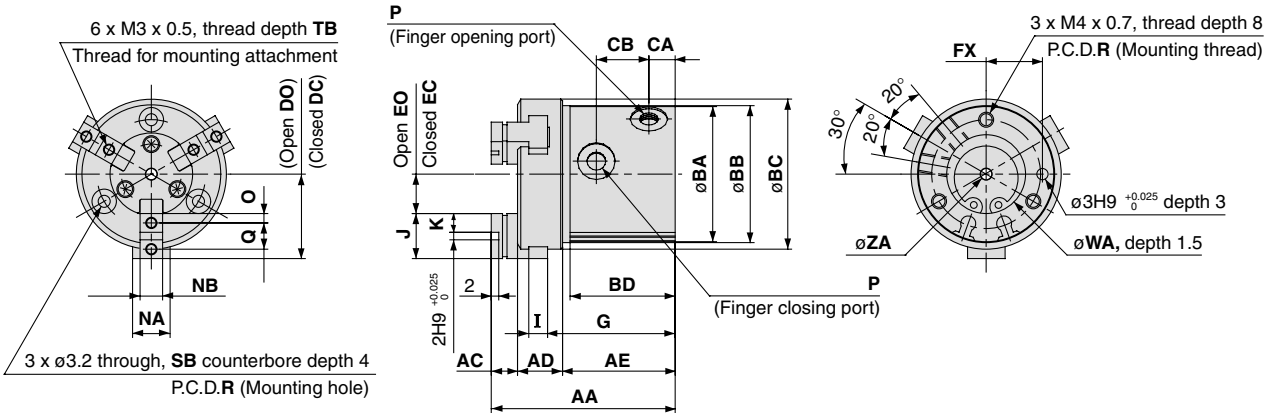

Auto switch mounting groove dimensions (2 locations)

MHSH3-16D

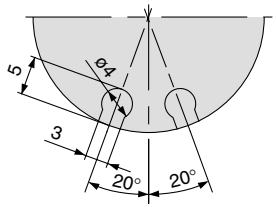

MHSH3-20D

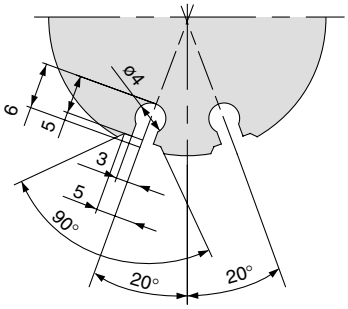

MHSH3-25D

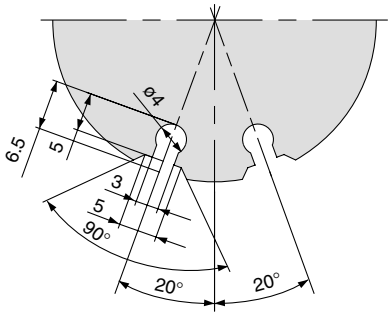

(mm)

Model	AA	AC	AD	AE	BA	BB	BC	BD	CA	CB	DC	DO	EC	EO	FX	G	I	J	K	NA	NB
MHSH3-16D	46	7	10.5	28.5	30	30.5	34	27	7	14	17.5	19.5	7.5	9.5	12	32	4	10	4	8	5h9 $^{0}_{-0.030}$
MHSH3-20D	49	7	12	30	36	36.5	40	28	7	14	20	22	8	10	15	34	5	12	5	10	6h9 $^{0}_{-0.030}$
MHSH3-25D	55	8	13	34	42	42.5	47	32	7.5	17.5	23.5	26.5	9.5	12.5	18	38	5	14	6	12	6h9 $^{0}_{-0.030}$

Model	O	P	Q	R	SB	TB	WA	ZA
MHSH3-16D	2	M3 x 0.5	6	24	6	5	17H9 $^{+0.043}_{0}$	3H10 $^{+0.040}_{0}$
MHSH3-20D	2.5	M5 x 0.8	7	29	6.5	6	21H9 $^{+0.052}_{0}$	3H10 $^{+0.040}_{0}$
MHSH3-25D	3	M5 x 0.8	8	34	6.5	6	26H9 $^{+0.052}_{0}$	4H10 $^{+0.048}_{0}$

MHSH3-32D to 80D

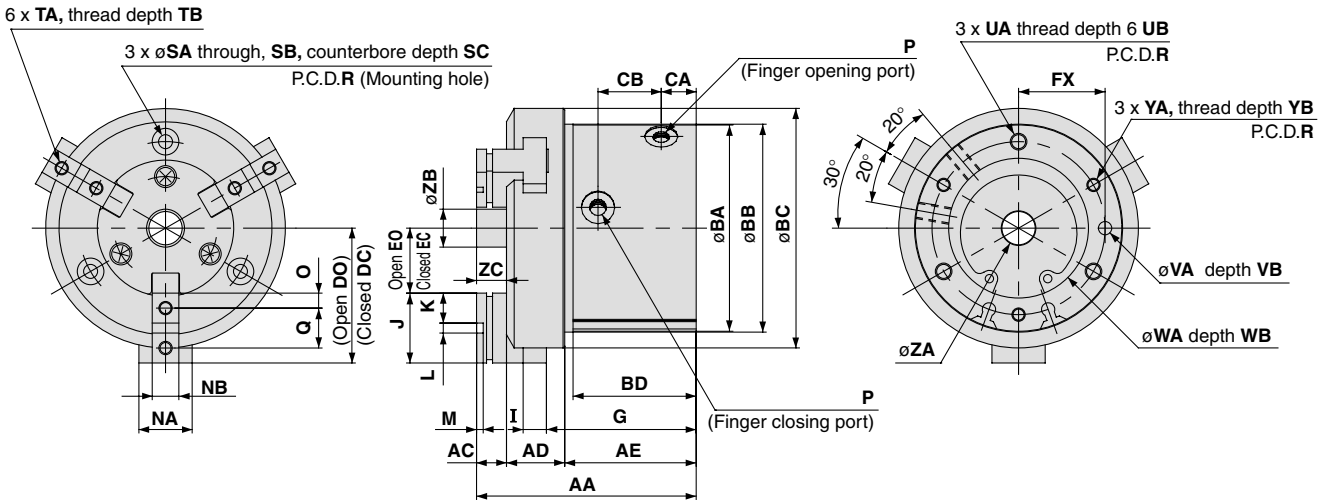

Auto switch mounting groove dimensions (2 locations)

MHSH3-32D

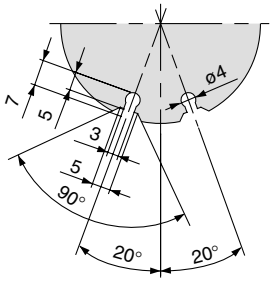

MHSH3-40D

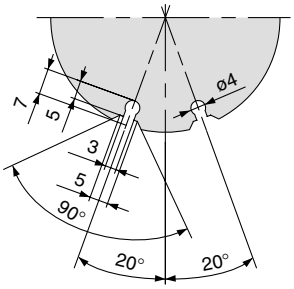

MHSH3-50D

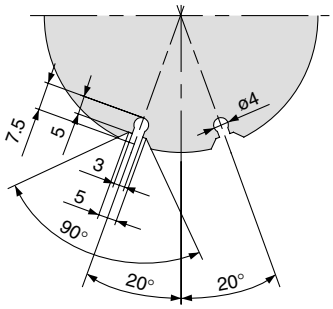

MHSH3-63D

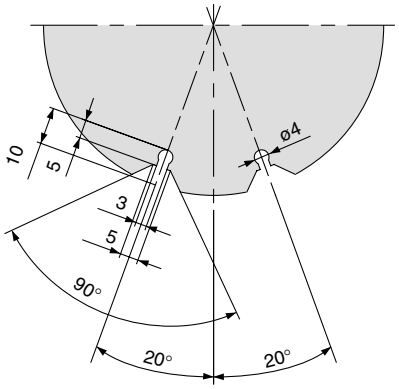

MHSH3-80D

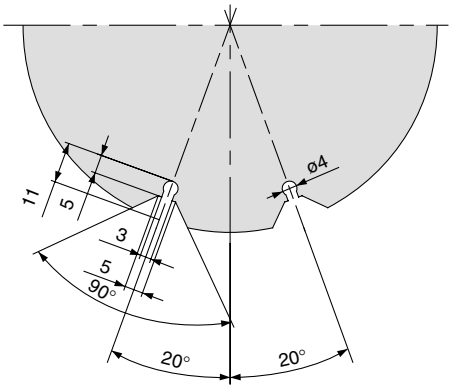

(mm)

Model	AA	AC	AD	AE	BA	BB	BC	BD	CA	CB	DC	DO	EC	EO	FX	G	I	J	K	L	M	NA	NB	O
MHSH3-32D	63	9	15.5	38.5	54	54.5	62	36	9.5	19	31.5	35.5	11.5	15.5	22	43.5	6	20	9	2H9 $^{+0.025}_{0}$	2	14	8h9 $^{0}_{-0.036}$	4.5
MHSH3-40D	66	9	17.5	39.5	62	62.5	72	37	10.5	19	36	40	15	19	26	45	7	21	9	3H9 $^{+0.025}_{0}$	2	16	8h9 $^{0}_{-0.036}$	4.5
MHSH3-50D	80	10	21	49	74	74.5	84	46	11.5	26.5	42	48	18	24	32	55.5	9	24	10	4H9 $^{+0.030}_{0}$	2	18	10h9 $^{0}_{-0.036}$	5
MHSH3-63D	91	12	26	53	92	92.5	102	50	13	28	51	59	23	31	40	61	11	28	11	6H9 $^{+0.030}_{0}$	3	24	12h9 $^{0}_{-0.043}$	5.5
MHSH3-80D	108	15	31.5	61.5	112	112.5	125	57	14	31	63	73	31	41	50	72	12	32	12	8H9 $^{+0.036}_{0}$	4	28	14h9 $^{0}_{-0.043}$	6

Model	P	Q	R	SA	SB	SC	TA	TB	UA	UB	VA	VB	WA	WB	YA	YB	ZA	ZB	ZC
MHSH3-32D	M5 x 0.8	11	44	4.2	8	7	M4 x 0.7	8	M5 x 0.8	10	4H9 $^{+0.030}_{0}$	4	34H9 $^{+0.062}_{0}$	2	M4 x 0.7	8	6H10 $^{+0.048}_{0}$	7.4	9
MHSH3-40D	M5 x 0.8	12	52	4.2	8	7	M4 x 0.7	8	M5 x 0.8	10	4H9 $^{+0.030}_{0}$	4	42H9 $^{+0.062}_{0}$	2	M4 x 0.7	8	10H10 $^{+0.058}_{0}$	11.4	9
MHSH3-50D	M5 x 0.8	14	63	5.1	9.5	8	M5 x 0.8	10	M6 x 1	12	5H9 $^{+0.030}_{0}$	5	52H9 $^{+0.074}_{0}$	2	M5 x 0.8	10	12H10 $^{+0.070}_{0}$	13.4	10
MHSH3-63D	M5 x 0.8	17	78	6.6	11	8	M5 x 0.8	10	M8 x 1.25	16	6H9 $^{+0.030}_{0}$	6	65H9 $^{+0.074}_{0}$	2.5	M6 x 1	12	16H10 $^{+0.070}_{0}$	17.4	12
MHSH3-80D	Rc 1/8 (G 1/8, NPT 1/8)	20	98	6.6	11	8	M6 x 1	12	M8 x 1.25	16	6H9 $^{+0.030}_{0}$	6	82H9 $^{+0.087}_{0}$	3	M6 x 1	12	20H10 $^{+0.084}_{0}$	21.4	15

Dimensions: Center Pusher/Cylinder Type

MHSH3-32DA to 80DA

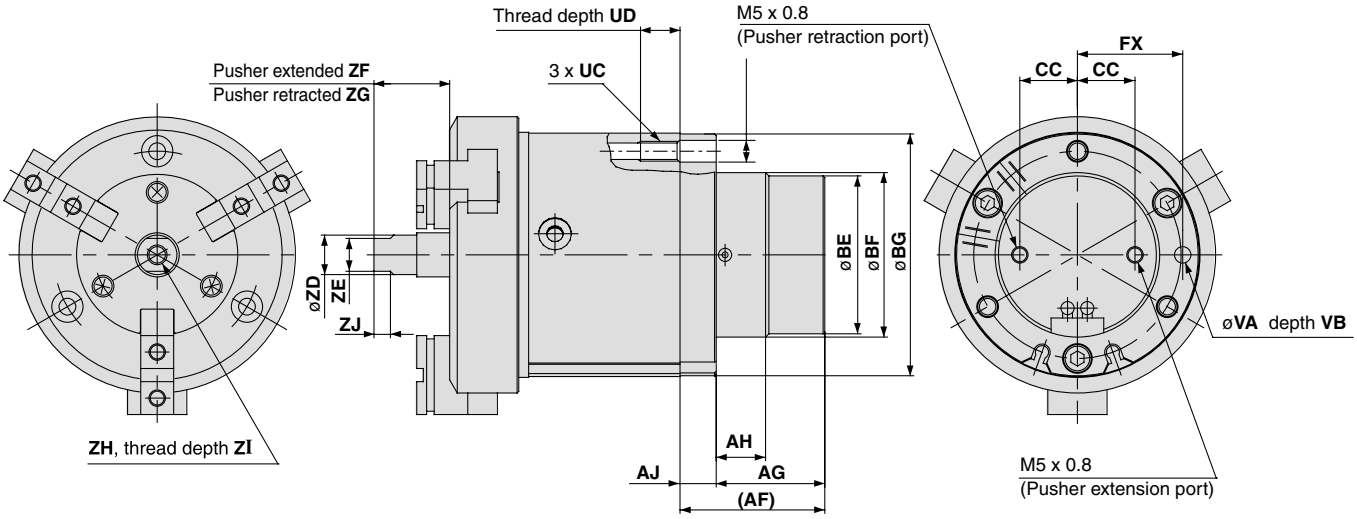

Center pusher auto switch mounting groove dimensions (2 locations)

MHSH3-32DA

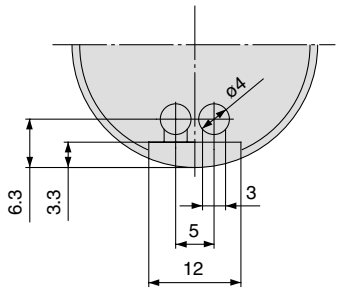

MHSH3-40DA

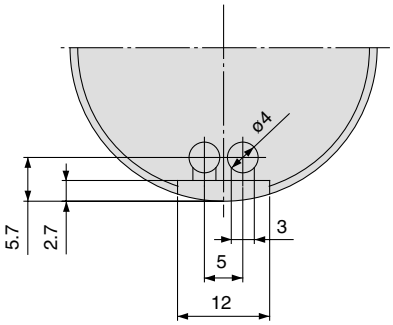

MHSH3-50DA

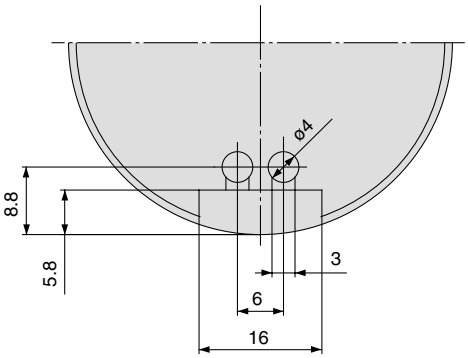

MHSH3-63DA

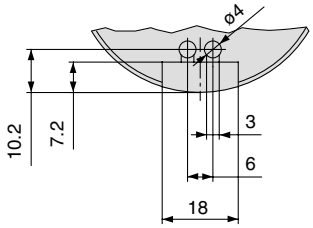

MHSH3-80DA

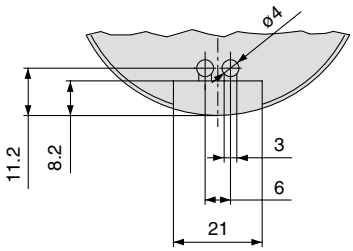

Note) For dimensions, refer to the MHSH3-32 to 80D dimensions on page 579.

(mm)

Model	AF	AG	AH	AJ	BE	BF	BG	CC	FX	UC	UD	UE	VA	VB	ZD	ZE	ZF	ZG	ZH	ZI	ZJ
MHSH3-32DA	35	26	9	9	30	32h9 $^{0}_{-0.062}$	53.5	9.5	22	M5 x 0.8	10	5.5	4H9 $^{+0.030}_{0}$	4	6	5	20	15	M3 x 0.5	6	3.5
MHSH3-40DA	36	27	12	9	38	40h9 $^{0}_{-0.062}$	61.5	13.5	26	M5 x 0.8	10	5.5	4H9 $^{+0.030}_{0}$	4	10	8	21	16	M5 x 0.8	10	4.5
MHSH3-50DA	44	33	15	11	48	50h9 $^{0}_{-0.062}$	73.5	17.5	32	M6 x 1	12	6.6	5H9 $^{+0.030}_{0}$	5	12	10	28	18	M6 x 1	12	5
MHSH3-63DA	48	35	18	13	58	60h9 $^{0}_{-0.074}$	91.5	20	40	M8 x 1.25	16	8.6	6H9 $^{+0.030}_{0}$	6	16	14	32	22	M8 x 1.25	16	7
MHSH3-80DA	58	45	20	13	68	70h9 $^{0}_{-0.074}$	111.5	25	50	M8 x 1.25	16	8.6	6H9 $^{+0.030}_{0}$	6	20	17	41	26	M10 x 1.5	20	8

Dimensions: Center Pusher/Spring Type

MHSH3-32DB to 80DB

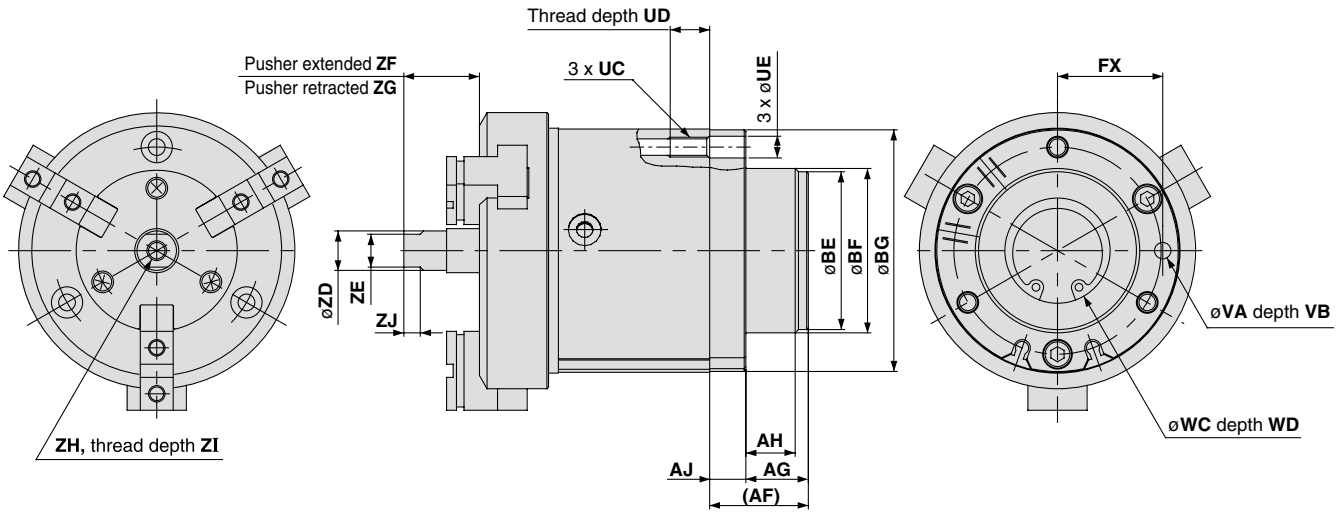

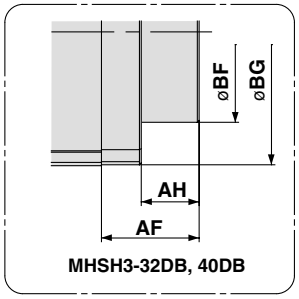

MHSH3-32DB, 40DB

Note) For dimensions, refer to the MHSH3-32 to 80D dimensions on page 579.

(mm)

Model	AF	AG	AH	AJ	BE	BF	BG	FX	UC	UD	UE	VA	VB	WC	WD	ZD	ZE	ZF	ZG
MHSH3-32DB	18	—	9	9	—	32h9 $^{0}_{-0.062}$	53.5	22	M5 x 0.8	10	5.5	4H9 $^{+0.030}_{0}$	4	20 $^{+0.1}_{0}$	1.5	6	5	20	15
MHSH3-40DB	21	—	12	9	—	40h9 $^{0}_{-0.062}$	61.5	26	M5 x 0.8	10	5.5	4H9 $^{+0.030}_{0}$	4	24 $^{+0.1}_{0}$	1.5	10	8	21	16
MHSH3-50DB	30	19	15	11	48	50h9 $^{0}_{-0.062}$	73.5	32	M6 x 1	12	6.6	5H9 $^{+0.030}_{0}$	5	32 $^{+0.1}_{0}$	1.5	12	10	28	18
MHSH3-63DB	35	22	18	13	58	60h9 $^{0}_{-0.074}$	91.5	40	M8 x 1.25	16	8.6	6H9 $^{+0.030}_{0}$	6	42 $^{+0.1}_{0}$	2	16	14	32	22
MHSH3-80DB	48	35	20	13	68	70h9 $^{0}_{-0.074}$	111.5	50	M8 x 1.25	16	8.6	6H9 $^{+0.030}_{0}$	6	52 $^{+0.1}_{0}$	2	20	17	41	26

Model	ZH	ZI	ZJ
MHSH3-32DB	M3 x 0.5	6	3.5
MHSH3-40DB	M5 x 0.8	10	4.5
MHSH3-50DB	M6 x 1	12	5
MHSH3-63DB	M8 x 1.25	16	7
MHSH3-80DB	M10 x 1.5	20	8

Dimensions: Through-hole with Dust Cover

MHSHJ3-32D to 80D

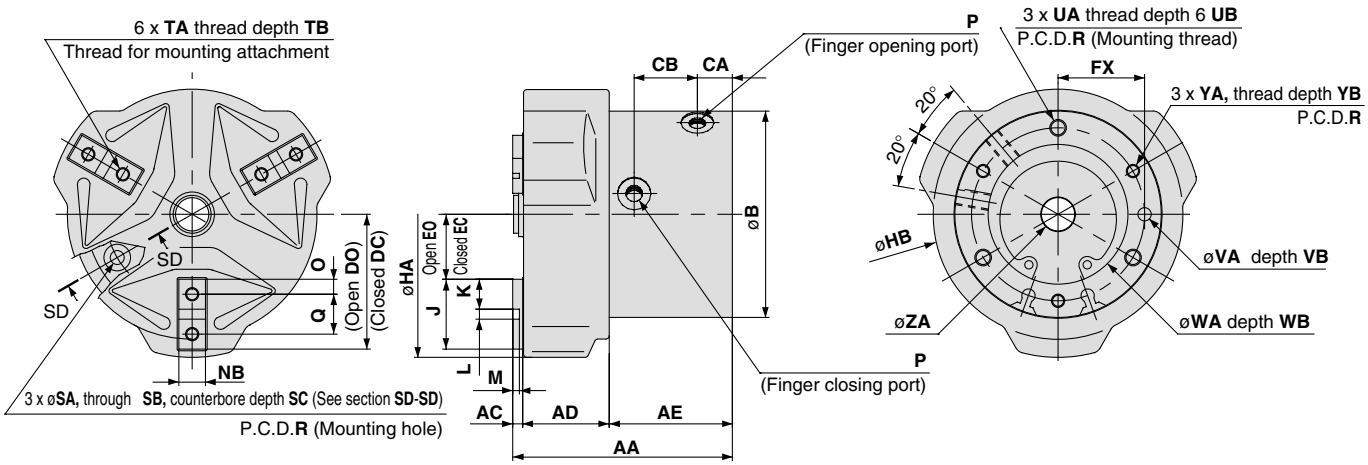

Auto switch mounting groove dimensions (2 locations)

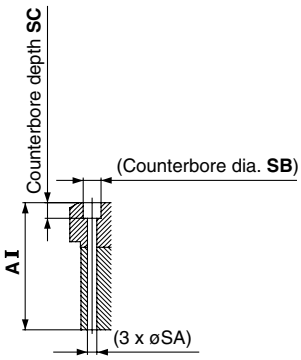

Section SD - SD

MHSHJ3-32D

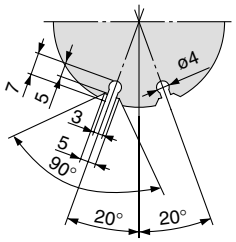

MHSHJ3-40D

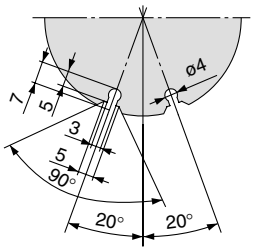

MHSHJ3-50D

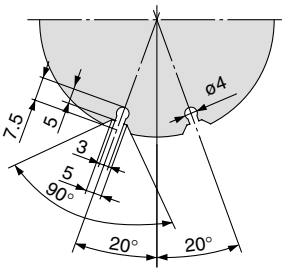

MHSHJ3-63D

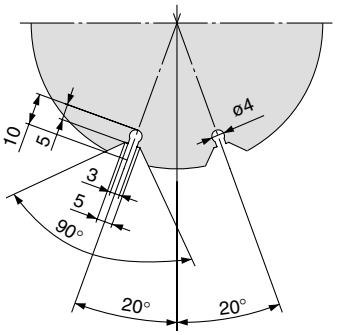

MHSHJ3-80D

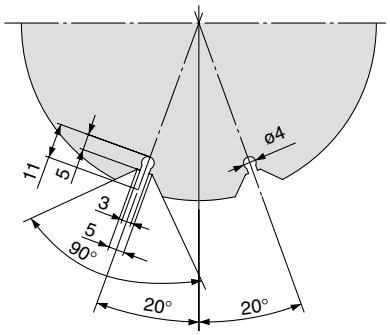

(mm)

Model	AA	AC	AD	AE	AI	B	CA	CB	DC	DO	EC	EO	FX	HA	HB	J	K	L	M	NB
MHSHJ3-32D	63	3	24	36	54	54	9.5	19	31.5	35.5	11.5	15.5	22	76	65	20	9	2H9 $^{+0.025}_{0}$	2	8h9 $^{0}_{-0.036}$
MHSHJ3-40D	66	3	26	37	57	62	10.5	19	36	40	15	19	26	86	75	21	9	3H9 $^{+0.025}_{0}$	2	8h9 $^{0}_{-0.036}$
MHSHJ3-50D	80	3	31	46	70	74	11.5	26.5	42	48	18	24	32	103	88	24	10	4H9 $^{+0.030}_{0}$	2	10h9 $^{0}_{-0.036}$
MHSHJ3-63D	91	4	37	50	79	92	13	28	51	59	23	31	40	125	106	28	11	6H9 $^{+0.030}_{0}$	3	12h9 $^{0}_{-0.043}$
MHSHJ3-80D	108	5	46	57	93	112	14	31	63	73	31	41	50	158	130	32	12	8H9 $^{+0.036}_{0}$	4	14h9 $^{0}_{-0.043}$

Model	O	P	Q	R	SA	SB	SC	TA	TB	UA	UB	VA	VB	WA	WB	YA	YB	ZA
MHSHJ3-32D	4.5	M5 x 0.8	11	44	4.2	8	7	M4 x 0.7	8	M5 x 0.8	10	4H9 $^{+0.030}_{0}$	4	34H9 $^{+0.062}_{0}$	2	M4 x 0.7	8	6H10 $^{+0.048}_{0}$
MHSHJ3-40D	4.5	M5 x 0.8	12	52	4.2	8	7	M4 x 0.7	8	M5 x 0.8	10	4H9 $^{+0.030}_{0}$	4	42H9 $^{+0.062}_{0}$	2	M4 x 0.7	8	10H10 $^{+0.058}_{0}$
MHSHJ3-50D	5	M5 x 0.8	14	63	5.1	9.5	8	M5 x 0.8	10	M6 x 1	12	5H9 $^{+0.030}_{0}$	5	52H9 $^{+0.074}_{0}$	2	M5 x 0.8	10	12H10 $^{+0.070}_{0}$
MHSHJ3-63D	5.5	M5 x 0.8	17	78	6.6	11	8	M5 x 0.8	10	M8 x 1.25	16	6H9 $^{+0.030}_{0}$	6	65H9 $^{+0.074}_{0}$	2.5	M6 x 1	12	16H10 $^{+0.070}_{0}$
MHSHJ3-80D	6	Rc 1/8	20	98	6.6	11	8	M6 x 1	12	M8 x 1.25	16	6H9 $^{+0.030}_{0}$	6	82H9 $^{+0.087}_{0}$	3	M6 x 1	12	20H10 $^{+0.084}_{0}$

Dimensions: Center Pusher with Dust Cover/Cylinder Type

MHSHJ3-32DA to 80DA

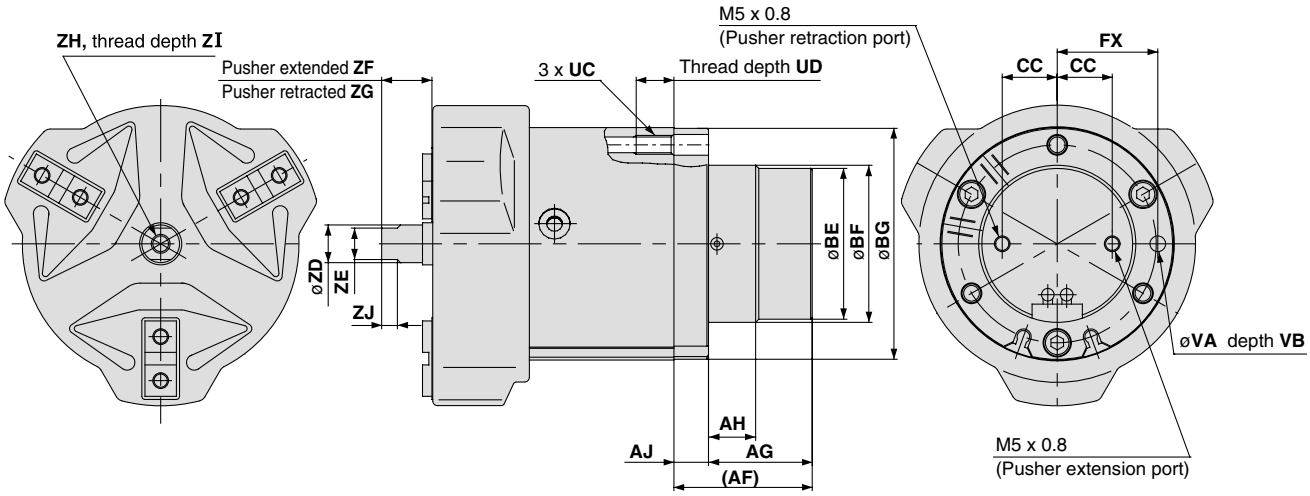

Note) For dimensions, refer to the MHSHJ3-32 to 80D dimensions on page 582.
For auto switch mounting groove, refer to MHSH3-32 to 80DA on page 580.

(mm)

Model	AF	AG	AH	AJ	BE	BF	BG	CC	FX	UC	UD	VA	VB	ZD	ZE	ZF	ZG	ZH	ZI	ZJ
MHSHJ3-32DA	35	26	9	9	30	32h9 $^{0}_{-0.062}$	53.5	9.5	22	M5 x 0.8	10	4H9 $^{+0.030}_{0}$	4	6	5	14	9	M3 x 0.5	6	3.5
MHSHJ3-40DA	36	27	12	9	38	40h9 $^{0}_{-0.062}$	61.5	13.5	26	M5 x 0.8	10	4H9 $^{+0.030}_{0}$	4	10	8	15	10	M5 x 0.8	10	4.5
MHSHJ3-50DA	44	33	15	11	48	50h9 $^{0}_{-0.062}$	73.5	17.5	32	M6 x 1	12	5H9 $^{+0.030}_{0}$	5	12	10	21	11	M6 x 1	12	5
MHSHJ3-63DA	48	35	18	13	58	60h9 $^{0}_{-0.074}$	91.5	20	40	M8 x 1.25	16	6H9 $^{+0.030}_{0}$	6	16	14	24	14	M8 x 1.25	16	7
MHSHJ3-80DA	58	45	20	13	68	70h9 $^{0}_{-0.074}$	111.5	25	50	M8 x 1.25	16	6H9 $^{+0.030}_{0}$	6	20	17	31	16	M10 x 1.5	20	8

Dimensions: Center Pusher with Dust Cover/Spring Type

MHSHJ3-32DB to 80DB

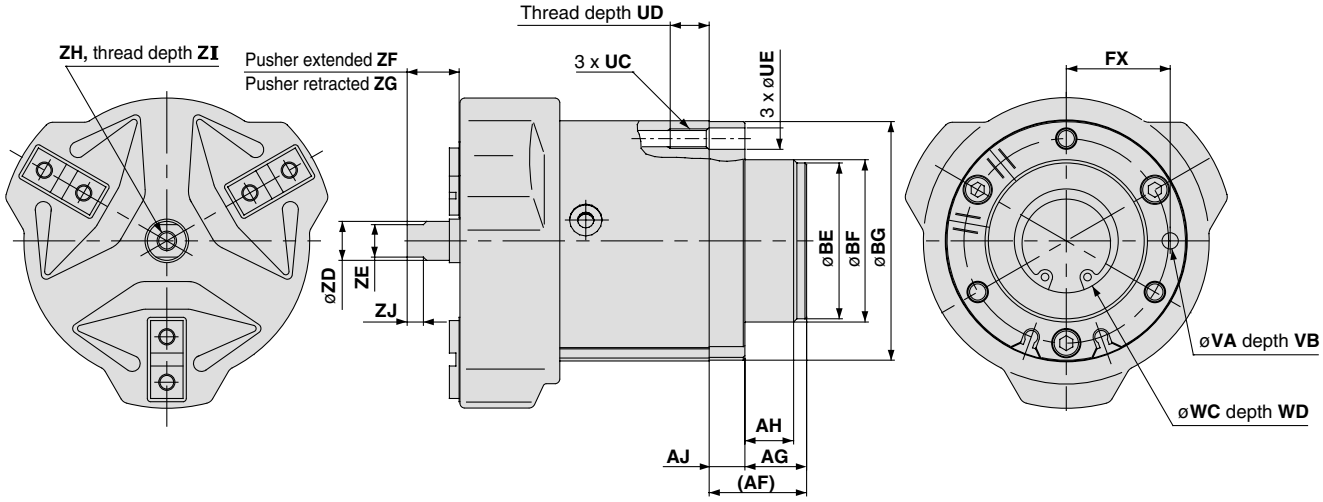

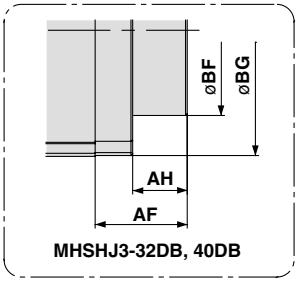

Note) For dimensions, refer to the MHSHJ3-32 to 80D dimensions on page 580.

(mm)

Model	AF	AG	AH	AJ	BE	BF	BG	FX	UC	UD	UE	VA	VB	WC	WD	ZD	ZE	ZF
MHSHJ3-32DB	18	—	9	9	—	32h9 $^{0}_{-0.062}$	53.5	22	M5 x 0.8	10	5.5	4H9 $^{+0.030}_{0}$	4	20 $^{+0.1}_{0}$	1.5	6	5	14
MHSHJ3-40DB	21	—	12	9	—	40h9 $^{0}_{-0.062}$	61.5	26	M5 x 0.8	10	5.5	4H9 $^{+0.030}_{0}$	4	24 $^{+0.1}_{0}$	1.5	10	8	15
MHSHJ3-50DB	30	19	15	11	48	50h9 $^{0}_{-0.062}$	73.5	32	M6 x 1	12	6.6	5H9 $^{+0.030}_{0}$	5	32 $^{+0.1}_{0}$	1.5	12	10	21
MHSHJ3-63DB	35	22	18	13	58	60h9 $^{0}_{-0.074}$	91.5	40	M8 x 1.25	16	8.6	6H9 $^{+0.030}_{0}$	6	42 $^{+0.1}_{0}$	2	16	14	24
MHSHJ3-80DB	48	35	20	13	68	70h9 $^{0}_{-0.074}$	111.5	50	M8 x 1.25	16	8.6	6H9 $^{+0.030}_{0}$	6	52 $^{+0.1}_{0}$	2	20	17	31

Model	ZG	ZH	ZI	ZJ
MHSHJ3-32DB	9	M3 x 0.5	6	3.5
MHSHJ3-40DB	10	M5 x 0.8	10	4.5
MHSHJ3-50DB	11	M6 x 1	12	5
MHSHJ3-63DB	14	M8 x 1.25	16	7
MHSHJ3-80DB	16	M10 x 1.5	20	8

Parallel Style Air Gripper/3-Finger Type

Series MHSL3

ø16, ø20, ø25, ø32, ø40, ø50, ø63, ø80, ø100, ø125

How to Order

Bore size

ø16 to ø25

MHSL3 – 20 D – M9BW □ – □

Number of fingers

3	3 fingers

Bore size

16	16 mm
20	20 mm
25	25 mm

Action

D	Double acting

Auto switch

Nil	Without auto switch (Built-in magnet)

∗For the applicable auto switch model, refer to the table below.

Number of auto switches

Nil	2 pcs.
S	1 pc.

Made to Order
Refer to page 587 for details.

Applicable Auto Switch/Refer to pages 761 to 809 for further information on auto switches.

Type	Special function	Electrical entry	Indicator light	Wiring (Output)	Load voltage DC	Load voltage AC	Auto switch model Perpendicular	Auto switch model In-line	Lead wire length (m)∗ 0.5 (Nil)	1 (M)	3 (L)	5 (Z)	Pre-wired connector	Applicable load	
Solid state switch	——	Grommet	Yes	3-wire (NPN)	24 V	5 V, 12 V	—	M9NV	M9N	●	●	●	○	○	IC circuit	Relay, PLC
				3-wire (PNP)				M9PV	M9P	●	●	●	○	○		
				2-wire		12V		M9BV	M9B	●	●	●	○	○	—	
	Diagnosis (2-color indication)			3-wire (NPN)		5 V, 12 V		M9NWV	M9NW	●	●	●	○	○	IC circuit	
				3-wire (PNP)				M9PWV	M9PW	●	●	●	○	○		
				2-wire		12 V		M9BWV	M9BW	●	●	●	○	○	—	
	Water resistant (2-color indication)			3-wire (NPN)		5 V, 12 V		M9NAV	M9NA	○	○	●	○	○	IC circuit	
				3-wire (PNP)				M9PAV	M9PA	○	○	●	○	○		
				2-wire		12 V		M9BAV	M9BA	○	○	●	○	○	—	

∗ Lead wire length symbols: 0.5 m ····· Nil (Example) M9NW
1 m ····· M (Example) M9NWM
3 m ····· L (Example) M9NWL
5 m ····· Z (Example) M9NWZ

∗ Auto switches marked with a "○" symbol are produced upon receipt of order.

Note 1) Take note of hysteresis with 2-color indication type switches. Refer to "Auto Switch Hysteresis" on page 606.
Note 2) Refer to pages 761 to 809 for further information on auto switches.

Bore size

ø32 to ø125

MHSL3 – 50 □ D – M9BW □ – □

Number of fingers

3	3 fingers

Bore size

32	32 mm
40	40 mm
50	50 mm
63	63 mm
80	80 mm
100	100 mm
125	125 mm

Port thread type

Symbol	Type	Cylinder bore
Nil	M thread	ø32 to ø63
	Rc	ø80 to ø125
TN	NPT	
TF	G	

Action

D	Double acting

Auto switch

Nil	Without auto switch (Built-in magnet)

∗For the applicable auto switch model, refer to the table below.

Number of auto switch

Nil	2 pcs.
S	1 pc.
n	"n" pcs.

Made to Order
Refer to page 587 for details.

Applicable Auto Switch/Refer to pages 761 to 809 for further information on auto switches.

Type	Special function	Electrical entry	Indicator light	Wiring (Output)	Load voltage DC	Load voltage AC	Auto switch model Perpendicular	Auto switch model In-line	Lead wire length (m)∗ 0.5 (Nil)	1 (M)	3 (L)	5 (Z)	Pre-wired connector	Applicable load	
Solid state switch	——	Grommet	Yes	3-wire (NPN)	24 V	5 V, 12 V	—	M9NV	M9N	●	●	●	○	○	IC circuit	Relay, PLC
				3-wire (PNP)				M9PV	M9P	●	●	●	○	○		
				2-wire		12 V		M9BV	M9B	●	●	●	○	○	—	
	Diagnosis (2-color indication)			3-wire (NPN)		5 V, 12 V		M9NWV	M9NW	●	●	●	○	○	IC circuit	
				3-wire (PNP)				M9PWV	M9PW	●	●	●	○	○		
				2-wire		12 V		M9BWV	M9BW	●	●	●	○	○	—	
	Water resistant (2-color indication)			3-wire (NPN)		5 V, 12 V		M9NAV	M9NA	○	○	●	○	○	IC circuit	
				3-wire (PNP)				M9PAV	M9PA	○	○	●	○	○		
				2-wire		12 V		M9BAV	M9BA	○	○	●	○	○	—	

∗ Lead wire length symbols: 0.5 m ····· Nil (Example) M9NW
1 m ····· M (Example) M9NWM
3 m ····· L (Example) M9NWL
5 m ····· Z (Example) M9NWZ

∗ Auto switches marked with a "○" symbol are produced upon receipt of order.

Note 1) Take note of hysteresis with 2-color indication type switches. Refer to "Auto Switch Hysteresis" on page 606.
Note 2) Refer to pages 761 to 809 for further information on auto switches.
Note 3) When mounting D-M9□□ on the cylinder (ø32 to ø125), auto switch mounting brackets (BMG2-012) are necessary.

Models/Specifications

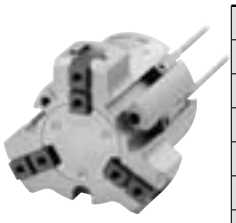

Model		MHSL3-16D	MHSL3-20D	MHSL3-25D	MHSL3-32D	MHSL3-40D	MHSL3-50D	MHSL3-63D	MHSL3-80D	MHSL3-100D	MHSL3-125D
Cylinder bore size (mm)		16	20	25	32	40	50	63	80	100	125
Fluid		Air									
Operating pressure (MPa)		0.2 to 0.6			0.1 to 0.6						
Ambient and fluid temperature (°C)		–10 to 60									
Repeatability (mm)		±0.01									
Max. operating frequency (c.p.m.)		120			60				30		
Lubrication		Not required									
Action		Double acting									
Effective gripping force (N) at 0.5 MPa (Note 1)	**External grip**	14	25	42	74	118	187	335	500	750	1,270
	Internal grip	16	28	47	82	130	204	359	525	780	1,320
Opening/Closing stroke (mm) (dia.)		10	10	12	16	20	28	32	40	48	64
Mass (g)		80	135	180	370	550	930	1,550	2,850	5,500	11,300

Note 1) Values for ø16 to ø25 are with gripping point L = 20 mm, for ø32 to ø63 with gripping point L = 30 mm, and for ø80 to ø125 with gripping point L = 50 mm. Refer to "Effective Gripping Force" data on pages 589 to 591 for the gripping force at each gripping position.

Symbol

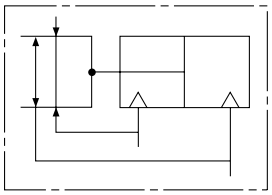

Made to Order
(Refer to pages 683 to 713 for details.)

Symbol	Specifications/Description
-X4	Heat resistance (100°C)
-X5	Fluororubber seal
-X50	Without magnet
-X53	EPDM seal/Fluorine grease
-X56	Axial ported
-X63	Fluorine grease
-X79	Grease for food

Refer to pages 604 to 611 for the specifications of products with auto switches.

- Auto switch installation examples and mounting positions
- Auto switch hysteresis
- Auto switch mounting
- Protrusion of auto switch from edge of body

Construction

Closed condition

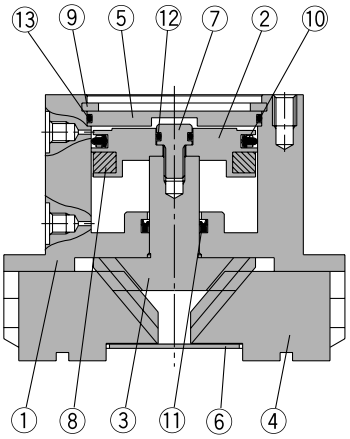

Open condition

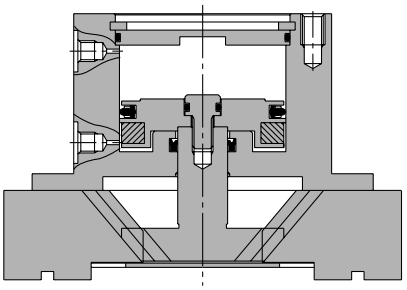

Component Parts

No.	Description	Material	Note
1	**Body**	Aluminum alloy	Hard anodized
2	**Piston**	Aluminum alloy	Hard anodized
3	**Cam**	Carbon steel	Heat treated, Specially treated
4	**Finger**	Carbon steel	Heat treated, Specially treated
5	**Cap**	Aluminum alloy	Hard anodized
6	**End plate**	Stainless steel	
7	**Piston bolt**	Stainless steel	

No.	Description	Material	Note
8	**Rubber magnet**	Synthetic rubber	
9	**Type C retaining ring**	Carbon steel	Nickel plated
10	**Piston seal**	NBR	
11	**Rod seal**	NBR	
12	**Gasket**	NBR	
13	**Gasket**	NBR	

Replacement Parts

Description	MHSL3-16D	MHSL3-20D	MHSL3-25D	MHSL3-32D	MHSL3-40D	Main parts
Seal kit	MHSL16-PS	MHSL20-PS	MHSL25-PS	MHSL32-PS	MHSL40-PS	⑩⑪⑫⑬
Finger	P3316034	P3316134	P3316234	P3316334	P3316434	④
Cam	P3316033	P3316133	P3316233	P3316333	P3316433	③
Piston assembly	MHS-A1601	MHS-A2001	MHS-A2501	MHS-A3201	MHS-A4001	②⑦⑧

Description	MHSL3-50D	MHSL3-63D	MHSL3-80D	MHSL3-100D	MHSL3-125D	Main parts
Seal kit	MHSL50-PS	MHSL63-PS	MHSL80-PS	MHS100-PS	MHSL125-PS	⑩⑪⑫⑬
Finger	P3316534	P3316634	P3316734	P3316834	P3316934	④
Cam	P3316533	P3316633	P3316733	P3316833	P3316933	③
Piston assembly	MHS-A5001	MHS-A6301	MHS-A8001	MHS-A10001	MHS-A12501	②⑦⑧

∗ Order 3 pieces of fingers for one unit.
Replacement part/Grease pack part no.: MH-G01 (30 g)

Gripping Point

- The workpiece gripping point distance should be within the gripping force ranges given for each pressure in the effective gripping force graphs below.
- If operated with the workpiece gripping point beyond the indicated ranges, an excessive offset load will be applied to the sliding section of the fingers, which can have an adverse effect on the service life of the product.

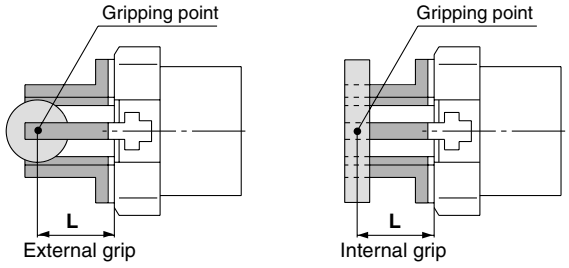

L: Gripping point distance

Effective Gripping Force

- Indication of effective gripping force
  The effective gripping force shown in the graphs to the right is expressed as **F**, which is the thrust of one finger when all 3 of the fingers and attachments are in full contact with the workpiece as shown in the figure below.

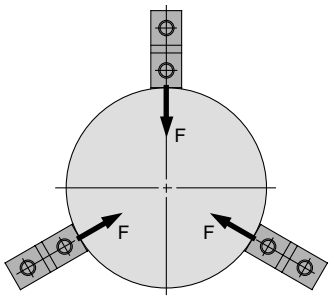

External grip

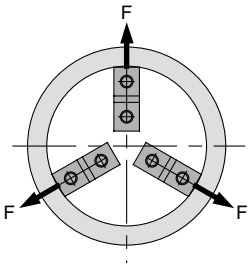

Internal grip

External Gripping Force

MHSL3-16D

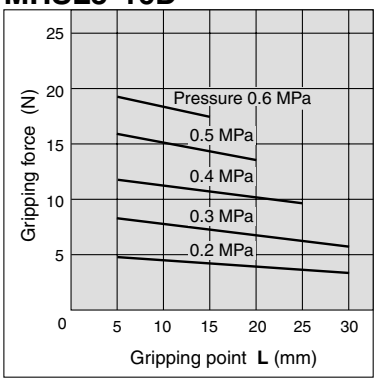

MHSL3-20D

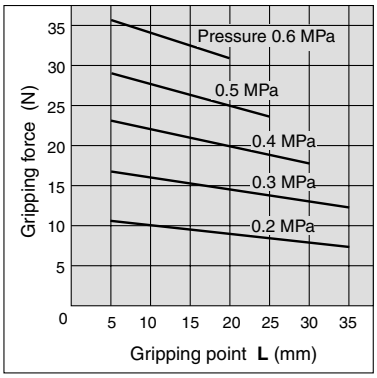

MHSL3-25D

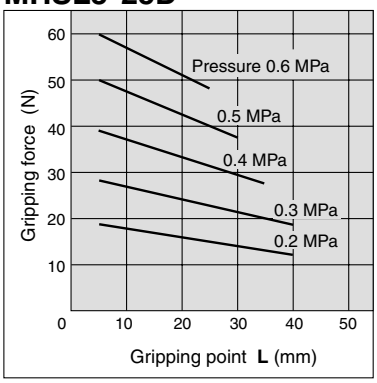

Internal Gripping Force

MHSL3-16D

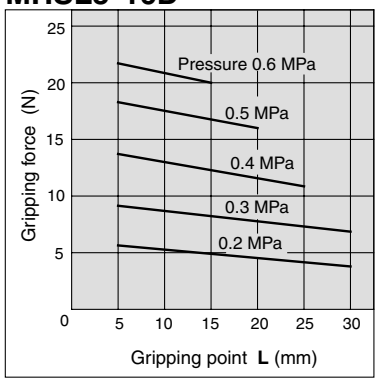

MHSL3-20D

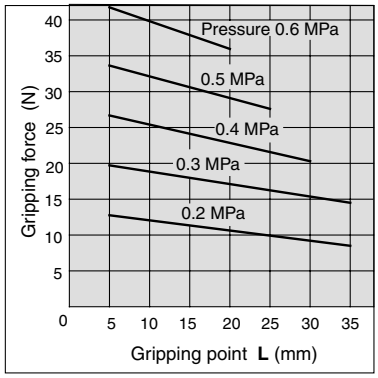

MHSL3-25D

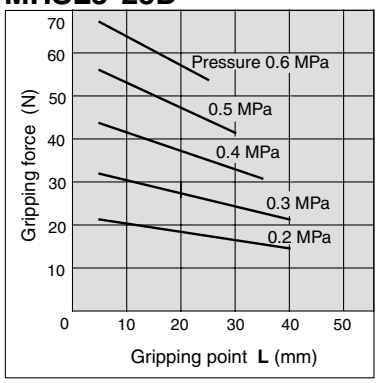

Effective Gripping Force

- Indication of effective gripping force
  The effective gripping force shown in the graphs to the right is expressed as **F**, which is the thrust of one finger when all 3 of the fingers and attachments are in full contact with the workpiece as shown in the figure below.

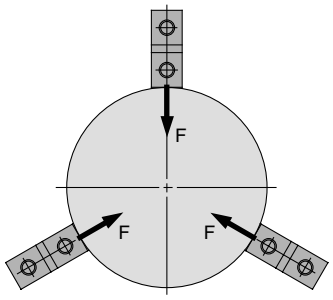

External grip

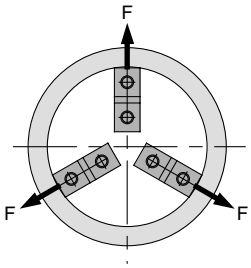

Internal grip

External Gripping Force

MHSL3-32D

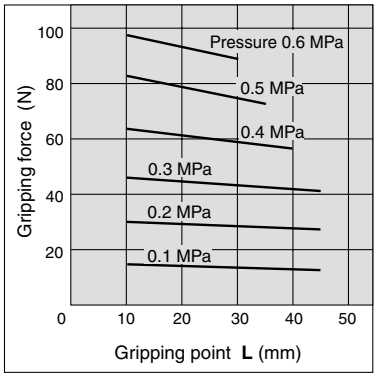

MHSL3-40D

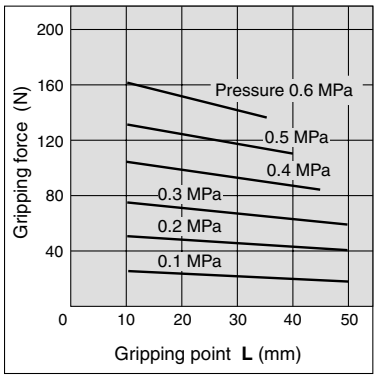

MHSL3-50D

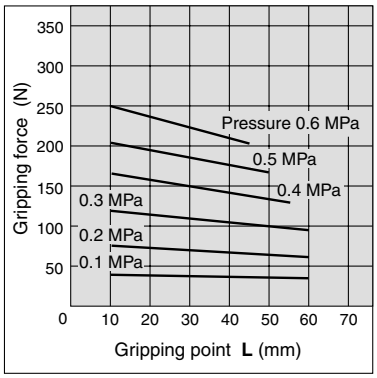

MHSL3-63D

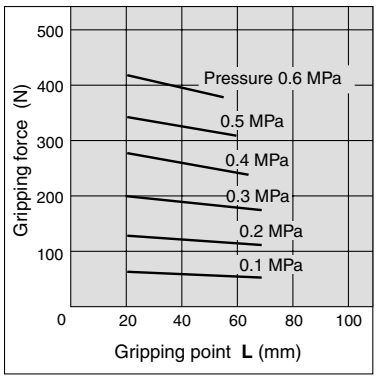

Internal Gripping Force

MHSL3-32D

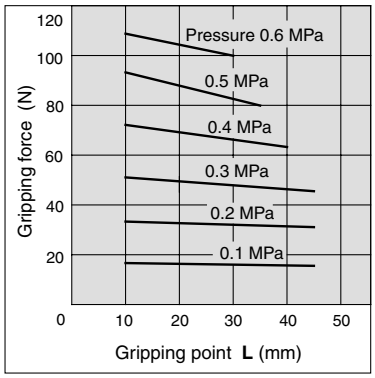

MHSL3-40D

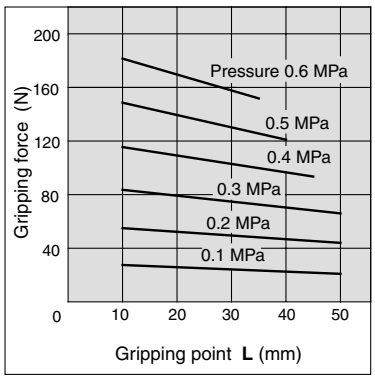

MHSL3-50D

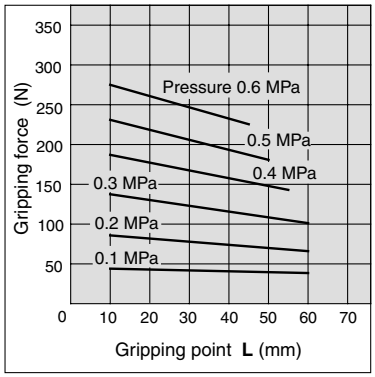

MHSL3-63D

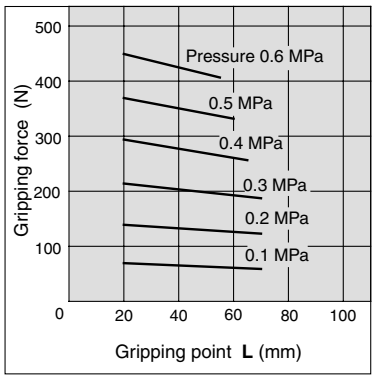

External Gripping Force

MHSL3-80D

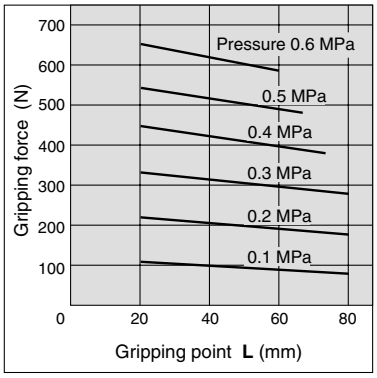

MHSL3-100D

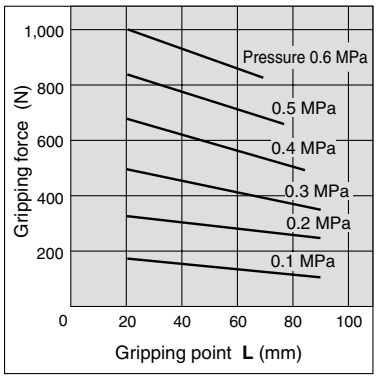

MHSL3-125D

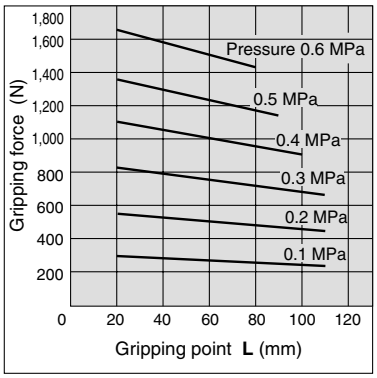

Internal Gripping Force

MHSL3-80D

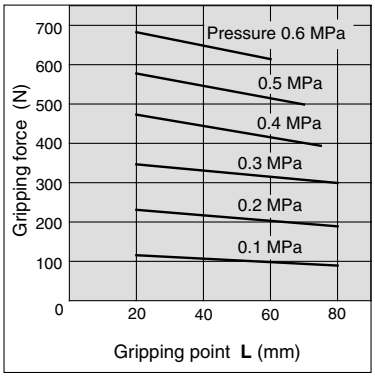

MHSL3-100D

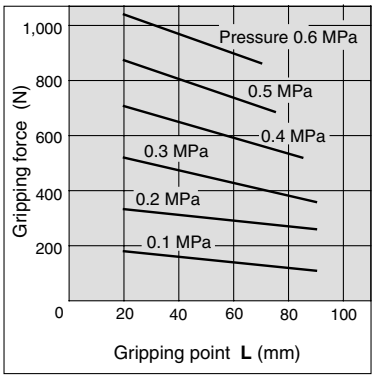

MHSL3-125D

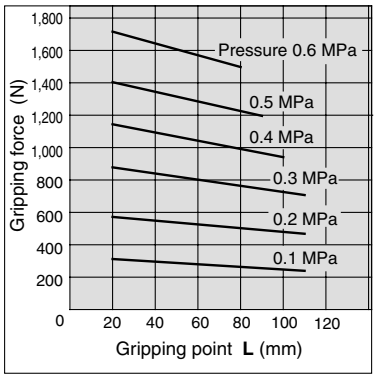

Dimensions

MHSL3-16D to 25D

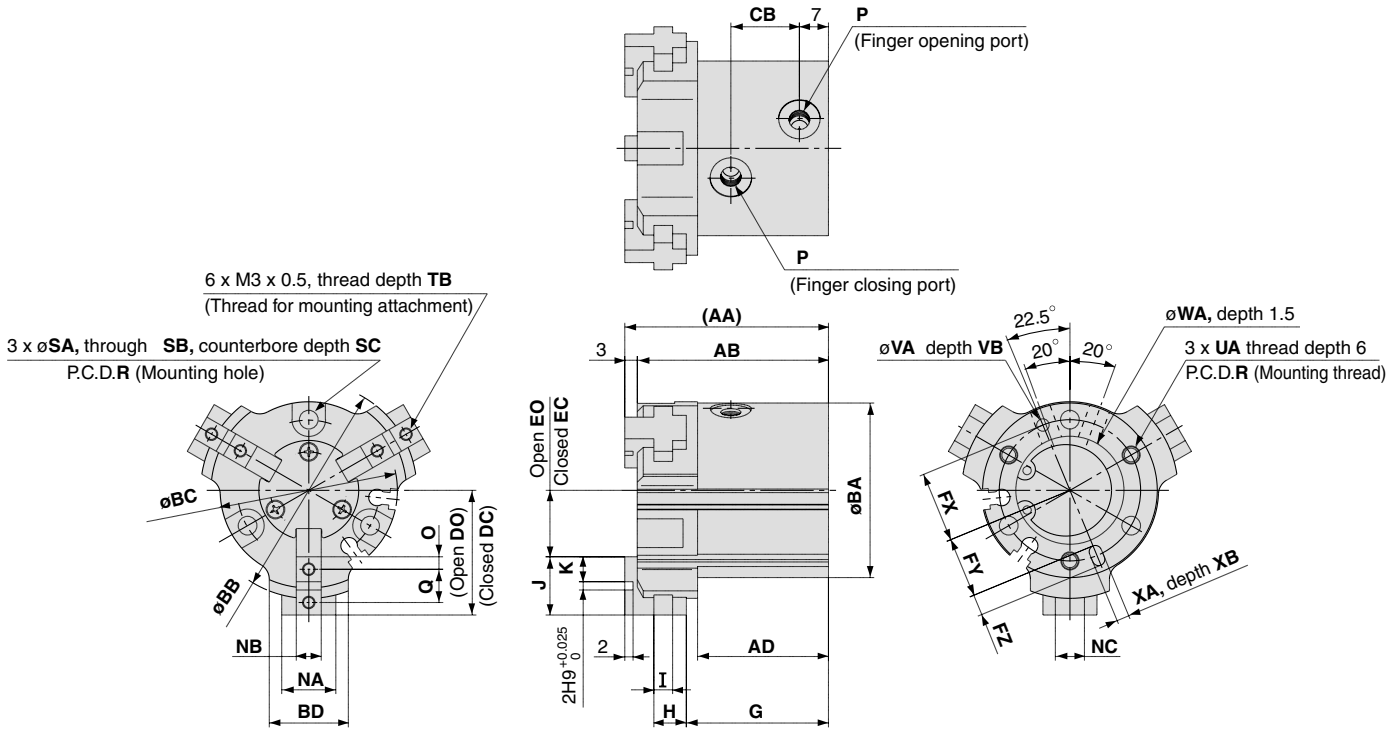

Auto switch mounting groove dimensions (2 locations)

MHSL3-16D

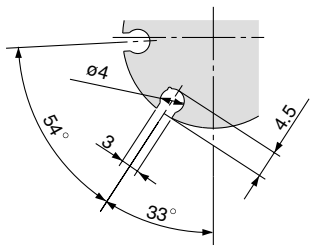

MHSL3-20D/25D

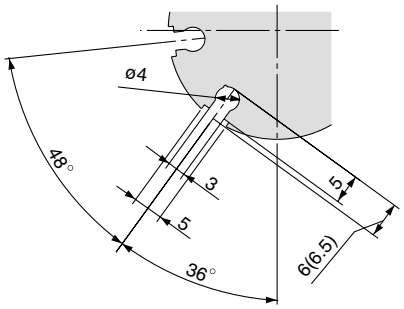

Dimensions inside ( ) are for ø25.

Mounting hole counterbore dimensions

MHSL3-16D

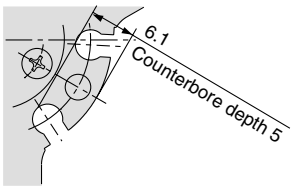

MHSL3-20D

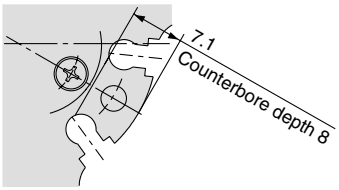

Note) The counterbore configuration differs only for the mounting hole section between the auto switch mounting grooves. (ø16, ø20 only)

(mm)

Model	AA	AB	AD	BA	BB	BC	BD	CB	DO	DC	EO	EC	FX	FY	FZ	G	H	I	J	K	NA	NB
MHSL3-16D	43.5	40.5	28	30	40	30.6	12	14	23.5	18.5	13.5	8.5	12.5	11	3	30.5	7	4	10	4	8	$5h9^{0}_{-0.030}$
MHSL3-20D	46	43	29	36	45	36.6	16	14	26	21	14	9	14.5	13	3	32	8	4	12	5	11	$6h9^{0}_{-0.030}$
MHSL3-25D	49	46	31.5	42	52	42.6	19	16.5	30	24	16	10	17	14.5	5	34.2	7.8	4.5	14	6	13	$6h9^{0}_{-0.030}$

Model	NC	O	P	Q	R	SA	SB	SC	TB	UA	VA	VB	WA	XA	XB
MHSL3-16D	5	2	M3 x 0.5	6	25	3.4	6.5	5	5	M3 x 0.5	$2H9^{+0.025}_{0}$	2	$17H9^{+0.043}_{0}$	$2H9^{+0.025}_{0}$	2
MHSL3-20D	7	2.5	M5 x 0.8	7	29	3.4	6.5	8	6	M3 x 0.5	$2H9^{+0.025}_{0}$	2	$21H9^{+0.052}_{0}$	$2H9^{+0.025}_{0}$	2
MHSL3-25D	7	3	M5 x 0.8	8	34	4.5	8	8	6	M4 x 0.7	$3H9^{+0.025}_{0}$	3	$26H9^{+0.052}_{0}$	$3H9^{+0.025}_{0}$	3

MHSL3-32D to 80D

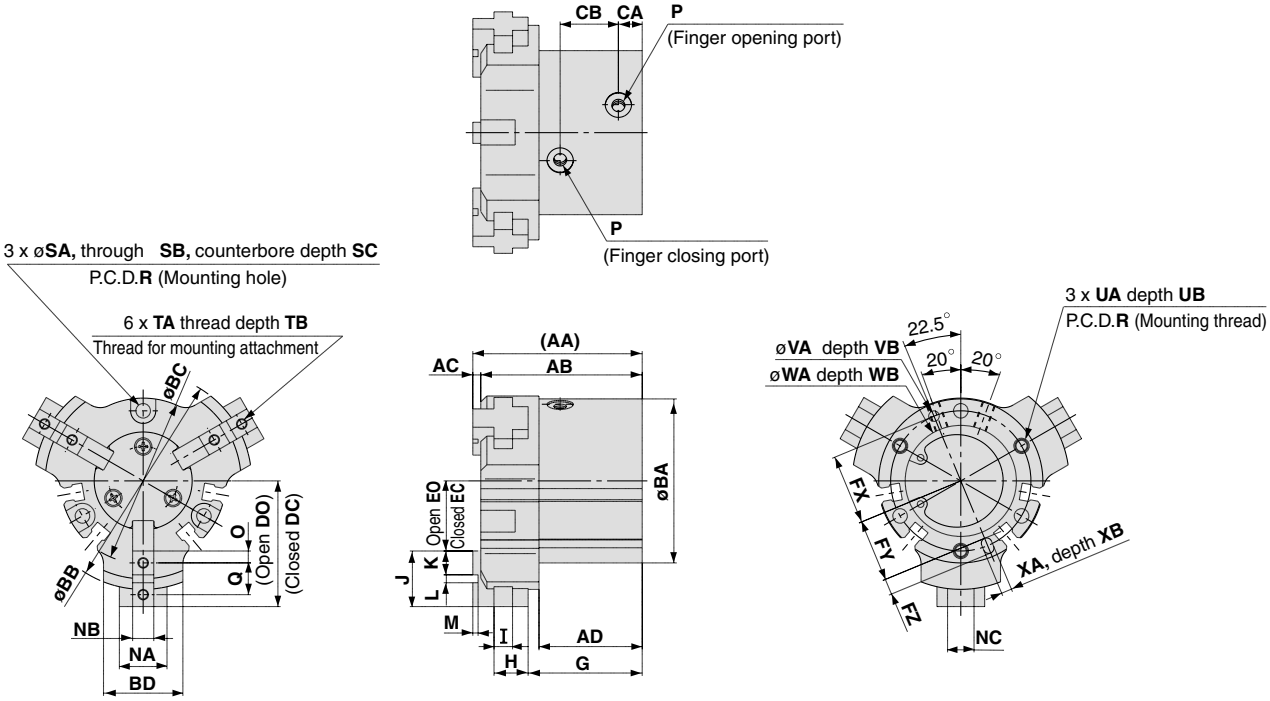

Auto switch mounting groove dimensions (4 locations)

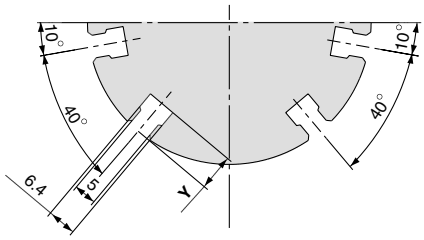

Auto switch mounting groove dimensions

Mounting hole counterbore dimensions

MHSL3-32D

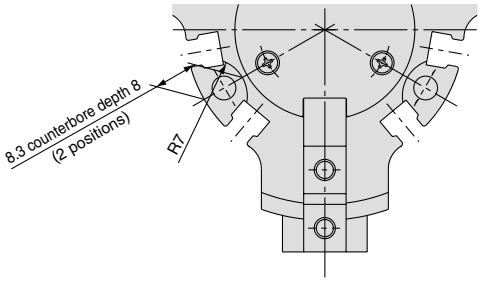

Note) The counterbore configuration differs only for the mounting hole section between the auto switch mounting grooves. (ø32 only)

(mm)

Model	AA	AB	AC	AD	BA	BB	BC	BD	CA	CB	DO	DC	EO	EC	FX	FY	FZ	G	H	I	J	K
MHSL3-32D	58	55	3	35.5	52	72	52.6	24	8	20	42	34	22	14	22	19.5	5	39.6	10.4	5	20	9
MHSL3-40D	64	61	3	38.5	62	82	62.6	30	9	22	47.5	37.5	26.5	16.5	26.5	23.5	6	42.5	13.5	7	21	9
MHSL3-50D	77.5	74.5	3	46.5	70	104	70.6	32	9	29	60	46	36	22	31	28	6	51.3	17.7	8	24	10
MHSL3-63D	89	85	4	51	86	120	86.6	40	12	30.5	70	54	42	26	38	34.5	7	58.5	19.5	10	28	11
MHSL3-80D	116	111	5	70	106	140	106.6	50	14	37.5	80.5	60.5	48.5	28.5	47.5	43.5	8	78.5	23.5	11	32	12

Model	L	M	NA	NB	NC	O	P	Q	R	SA	SB	SC	TA	TB	UA	UB	VA	VB
MHSL3-32D	$2H9^{+0.025}_{0}$	2	16	$8h9^{0}_{-0.036}$	10	4.5	M5 x 0.8	11	44	4.5	8	8	M4 x 0.7	8	M4 x 0.7	6	$3H9^{+0.025}_{0}$	3
MHSL3-40D	$3H9^{+0.025}_{0}$	2	18	$8h9^{0}_{-0.036}$	10	4.5	M5 x 0.8	12	53	5.5	9.5	11	M4 x 0.7	8	M5 x 0.8	10	$4H9^{+0.030}_{0}$	4
MHSL3-50D	$4H9^{+0.030}_{0}$	2	20	$10h9^{0}_{-0.036}$	12	5	M5 x 0.8	14	62	5.5	9.5	14.5	M5 x 0.8	10	M5 x 0.8	10	$4H9^{+0.030}_{0}$	4
MHSL3-63D	$6H9^{+0.036}_{0}$	3	26	$12h9^{0}_{-0.043}$	14	5.5	M5 x 0.8	17	76	6.6	11	17	M5 x 0.8	10	M6 x 1	12	$5H9^{+0.030}_{0}$	5
MHSL3-80D	$8H9^{+0.036}_{0}$	4	30	$14h9^{0}_{-0.043}$	16	6	Rc 1/8 (G 1/8, NPT 1/8)	20	95	6.6	11	23	M6 x 1	12	M6 x 1	12	$6H9^{+0.030}_{0}$	6

Model	WA	WB	XA	XB	Y
MHSL3-32D	$34H9^{+0.062}_{0}$	2	$3H9^{+0.025}_{0}$	3	6
MHSL3-40D	$42H9^{+0.062}_{0}$	2	$4H9^{+0.030}_{0}$	4	8
MHSL3-50D	$52H9^{+0.074}_{0}$	2	$4H9^{+0.030}_{0}$	4	7
MHSL3-63D	$65H9^{+0.074}_{0}$	2.5	$5H9^{+0.030}_{0}$	5	7.5
MHSL3-80D	$82H9^{+0.087}_{0}$	3	$6H9^{+0.030}_{0}$	6	9

Dimensions

MHSL3-100D/125D

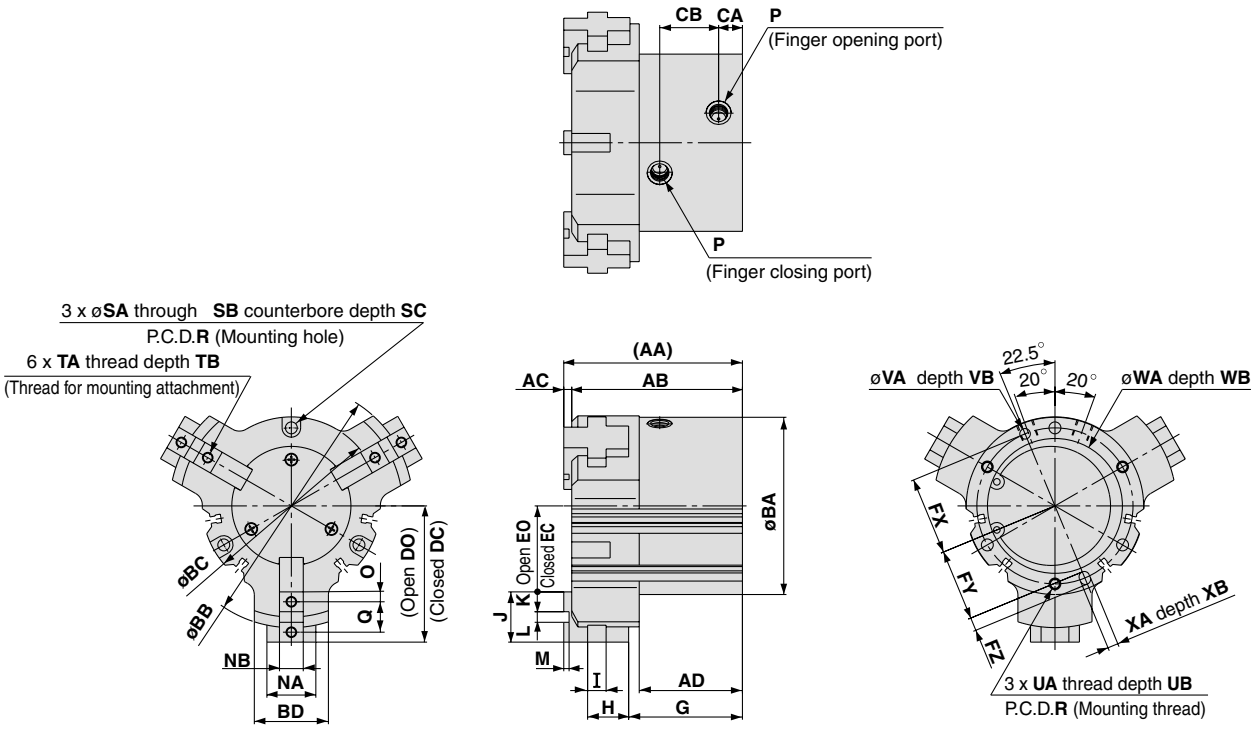

MHSL3-100D

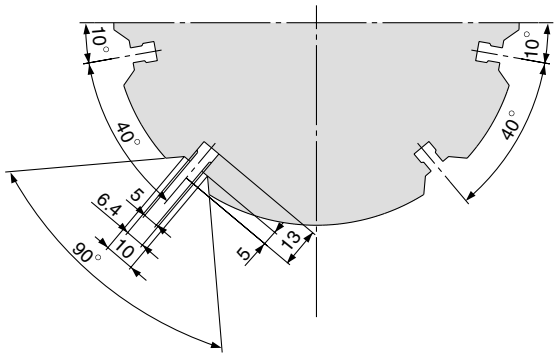

MHSL3-125D

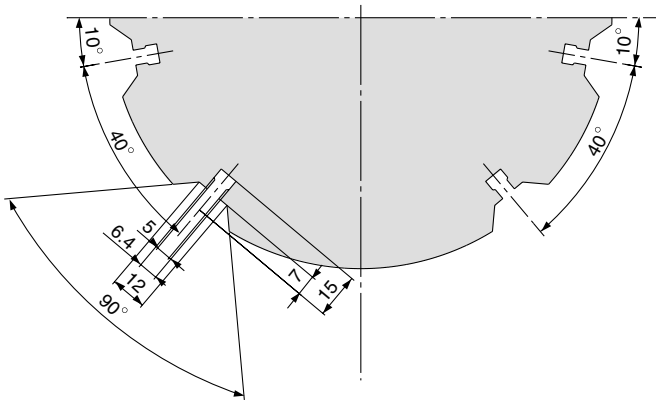

(mm)

Model	AA	AB	AC	AD	BA	BB	BC	BD	CA	CB	DO	DC	EO	EC	FX	FY	FZ	G	H	I	J	K
MHSL3-100D	135	129	6	78	134	184	134.6	56	18	44.5	103	79	65	41	59	54	10	86	31	14	38	15
MHSL3-125D	175	167	8	102	166	234	166.6	66	24	54	132	100	80	48	74	68	12	112	43	17	52	21

Model	L	M	NA	NB	NC	O	P	Q	R	SA	SB	SC	TA	TB	UA	UB	VA
MHSL3-100D	8H9 $^{+0.036}_{0}$	4	37	18h9 $^{0}_{-0.043}$	21	7.5	Rc 1/4 (G 1/4, NPT 1/4)	23	118	9	14	31	M8 x 1.25	16	M8 x 1.25	16	8H9$^{+0.036}_{0}$
MHSL3-125D	10H9 $^{+0.036}_{0}$	6	43	22h9 $^{0}_{-0.052}$	25	10.5	Rc 3/8 (G 3/8, NPT 3/8)	31	148	11	17.5	32	M10 x 1.5	20	M10 x 1.5	20	10H9$^{+0.036}_{0}$

Model	VB	WA	WB	XA	XB
MHSL3-100D	6	102H9 $^{+0.087}_{0}$	4	8H9 $^{+0.036}_{0}$	6
MHSL3-125D	8	130H9 $^{+0.100}_{0}$	6	10H9 $^{+0.036}_{0}$	8

Series MHSL3 Detailed Dimensions of Mounting Portion of End Plate

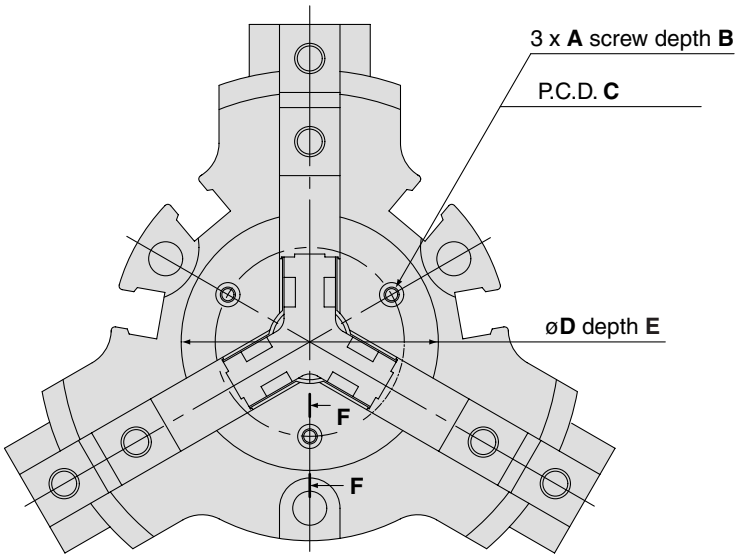

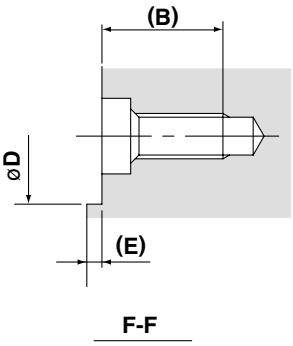

(mm)

Model	A	B	C	øD	E
MHSL3-16D	M2 x 0.4	5.5	12.5	18	0.5
MHSL3-20D		5.4	16	21.5	0.6
MHSL3-25D			18.5	24	
MHSL3-32D		5.2	25	34	0.8
MHSL3-40D	M3 x 0.5	8	27	37	1
MHSL3-50D			35	44	
MHSL3-63D			44	56	
MHSL3-80D	M4 x 0.7	9.5	54	70	1.5
MHSL3-100D			70	90	
MHSL3-125D			80	110	

Parallel Style Air Gripper/4-Finger Type

Series MHS4

ø16, ø20, ø25, ø32, ø40, ø50, ø63

How to Order

Bore size

ø16 to ø25

MHS4 – 20 D – M9BW □ – □

Number of fingers

4	4 fingers

Bore size

16	16 mm
20	20 mm
25	25 mm

Action

D	Double acting

Auto switch

Nil	Without auto switch (Built-in magnet)

∗For the applicable auto switch model, refer to the table below.

Number of auto switches

Nil	2 pcs.
S	1 pc.

Made to Order
Refer to page 597 for details.

Applicable Auto Switch/Refer to pages 761 to 809 for further information on auto switches.

Type	Special function	Electrical entry	Indicator light	Wiring (Output)	Load voltage DC	Load voltage AC	Auto switch model Perpendicular	Auto switch model In-line	Lead wire length (m)∗ 0.5 (Nil)	1 (M)	3 (L)	5 (Z)	Pre-wired connector	Applicable load	
Solid state switch	——	Grommet	Yes	3-wire (NPN)	24 V	5 V, 12 V	—	M9NV	M9N	●	●	●	○	○	IC circuit	Relay, PLC
				3-wire (PNP)				M9PV	M9P	●	●	●	○	○		
				2-wire		12V		M9BV	M9B	●	●	●	○	○	—	
	Diagnosis (2-color indication)			3-wire (NPN)		5 V, 12 V		M9NWV	M9NW	●	●	●	○	○	IC circuit	
				3-wire (PNP)				M9PWV	M9PW	●	●	●	○	○		
				2-wire		12 V		M9BWV	M9BW	●	●	●	○	○	—	
	Water resistant (2-color indication)			3-wire (NPN)		5 V, 12 V		M9NAV	M9NA	○	○	●	○	○	IC circuit	
				3-wire (PNP)				M9PAV	M9PA	○	○	●	○	○		
				2-wire		12 V		M9BAV	M9BA	○	○	●	○	○	—	

∗ Lead wire length symbols: 0.5 m ····· Nil (Example) M9NW
1 m ····· M (Example) M9NWM
3 m ····· L (Example) M9NWL
5 m ····· Z (Example) M9NWZ

∗ Auto switches marked with a "○" symbol are produced upon receipt of order.

Note 1) Take note of hysteresis with 2-color indication type switches. Refer to "Auto Switch Hysteresis" on page 606.
Note 2) Refer to pages 761 to 809 for further information on auto switches.

Bore size

ø32 to ø63

MHS4 – 50 D – M9BW □ – □

Number of fingers

4	4 fingers

Bore size

32	32mm
40	40mm
50	50mm
63	63mm

Action

D	Double acting

Auto switch

Nil	Without auto switch (Built-in magnet)

∗For the applicable auto switch model, refer to the table below.

Number of auto switches

Nil	2 pcs.
S	1 pc.

Made to Order
Refer to page 597 for details.

Applicable Auto Switch/Refer to pages 761 to 809 for further information on auto switches.

Type	Special function	Electrical entry	Indicator light	Wiring (Output)	Load voltage DC	Load voltage AC	Auto switch model Perpendicular	Auto switch model In-line	Lead wire length (m)∗ 0.5 (Nil)	1 (M)	3 (L)	5 (Z)	Pre-wired connector	Applicable load	
Solid state switch	——	Grommet	Yes	3-wire (NPN)	24 V	5 V, 12 V	—	M9NV	M9N	●	●	●	○	○	IC circuit	Relay, PLC
				3-wire (PNP)				M9PV	M9P	●	●	●	○	○		
				2-wire		12 V		M9BV	M9B	●	●	●	○	○	—	
	Diagnosis (2-color indication)			3-wire (NPN)		5 V, 12 V		M9NWV	M9NW	●	●	●	○	○	IC circuit	
				3-wire (PNP)				M9PWV	M9PW	●	●	●	○	○		
				2-wire		12 V		M9BWV	M9BW	●	●	●	○	○	—	
	Water resistant (2-color indication)			3-wire (NPN)		5 V, 12 V		M9NAV	M9NA	○	○	●	○	○	IC circuit	
				3-wire (PNP)				M9PAV	M9PA	○	○	●	○	○		
				2-wire		12 V		M9BAV	M9BA	○	○	●	○	○	—	

∗ Lead wire length symbols: 0.5 m ····· Nil (Example) M9NW
1 m ····· M (Example) M9NWM
3 m ····· L (Example) M9NWL
5 m ····· Z (Example) M9NWZ

∗ Auto switches marked with a "○" symbol are produced upon receipt of order.

Note 1) Take note of hysteresis with 2-color indication type switches. Refer to "Auto Switch Hysteresis" on page 606.
Note 2) Refer to pages 761 to 809 for further information on auto switches.
Note 3) When mounting D-M9□□ on the cylinder (ø32 to ø63), auto switch mounting brackets (BMG2-012) are necessary.

Models/Specifications

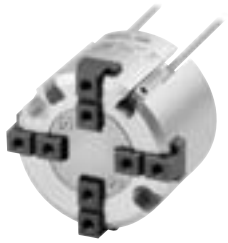

Model		MHS4-16D	MHS4-20D	MHS4-25D	MHS4-32D	MHS4-40D	MHS4-50D	MHS4-63D
Cylinder bore size (mm)		16	20	25	32	40	50	63
Fluid		Air						
Operating pressure (MPa)		0.2 to 0.6			0.1 to 0.6			
Ambient and fluid temperature (°C)		–10 to 60						
Repeatability (mm)		±0.01						
Max. operating frequency (c.p.m.)		120			60			
Lubrication		Not required						
Action		Double acting						
Effective gripping force (N) at 0.5 MPa (Note 1)	External grip	10	19	31	55	88	140	251
	Internal grip	12	21	35	61	97	153	268
Opening/Closing stroke (mm)		4	4	6	8	8	12	16
Mass (g)		66	110	154	300	390	590	1,095

Note 1) Values for ø16 to ø25 are with gripping point L = 20 mm, for ø32 to ø63 with gripping point L = 30 mm. Refer to "Effective Gripping Force" data for the gripping force at each gripping position.

Symbol

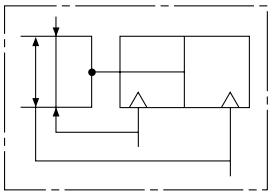

Made to Order
(Refer to pages 683 to 713 for details.)

Symbol	Specifications/Description
-X4	Heat resistance (100°C)
-X5	Fluororubber seal
-X50	Without magnet
-X53	EPDM seal/Fluorine grease
-X56	Axial ported
-X63	Fluorine grease
-X79	Grease for food

Refer to pages 604 to 611 for the specifications of products with auto switches.

- Auto switch installation examples and mounting positions
- Auto switch hysteresis
- Auto switch mounting
- Protrusion of auto switch from edge of body

Construction

Closed condition

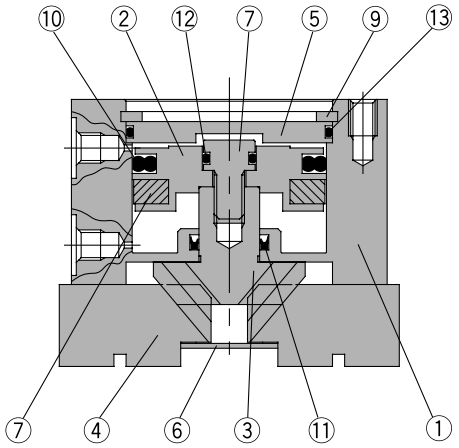

Open condition

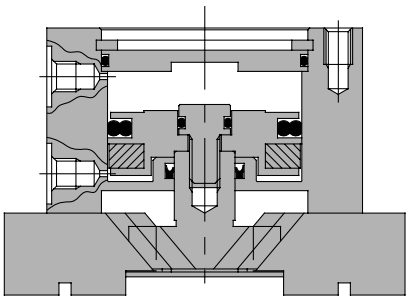

Component Parts

No.	Description	Material	Note
1	**Body**	Aluminum alloy	Hard anodized
2	**Piston**	Aluminum alloy	Hard anodized
3	**Cam**	Carbon steel	Heat treated, Specially treated
4	**Finger**	Carbon steel	Heat treated, Specially treated
5	**Cap**	Aluminum alloy	Hard anodized
6	**End plate**	Stainless steel	
7	**Piston bolt**	Stainless steel	

No.	Description	Material	Note
8	**Rubber magnet**	Synthetic rubber	
9	**Type C retaining ring**	Carbon steel	Nickel plated
10	**Piston seal**	NBR	
11	**Rod seal**	NBR	
12	**Gasket**	NBR	
13	**Gasket**	NBR	

Replacement Parts

Description	MHS4-16D	MHS4-20D	MHS4-25D	MHS4-32D	MHS4-40D	MHS4-50D	MHS4-63D	Main parts
Seal kit	MHS16-PS	MHS20-PS	MHS25-PS	MHS32-PS	MHS40-PS	MHS50-PS	MHS63-PS	⑩⑪⑫⑬
Finger	P3316004	P3316104	P3316204	P3316304	P3316404	P3316504	P3316604	④
Cam	P3316043	P3316143	P3316243	P3316343	P3316443	P3316543	P3316643	③
Piston assembly	MHS-A1601	MHS-A2001	MHS-A2501	MHS-A3201	MHS-4001	MHS-5001	MHS-6301	②⑦⑧

∗ Order 4 pieces of fingers for one unit.
Replacement part/Grease pack part no.: MH-G01 (30 g)

Gripping Point

- The workpiece gripping point distance should be within the gripping force ranges given for each pressure in the effective gripping force graphs below.
- If operated with the workpiece gripping point beyond the indicated ranges, an excessive offset load will be applied to the sliding section of the fingers, which can have an adverse effect on the service life of the product.

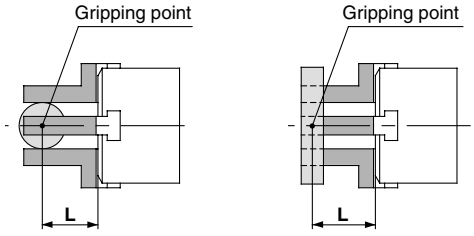

External grip Internal grip

L: Gripping point distance

Effective Gripping Force

- Indication of effective gripping force
  The gripping force shown in the tables represents the gripping force of one finger when all fingers and attachments are in contact with the workpiece. The gripping force of Series MHS4 is the same as Series MHS2 while one pair of opposite fingers is used to grip the workpiece and the other pair of fingers is used for positioning.

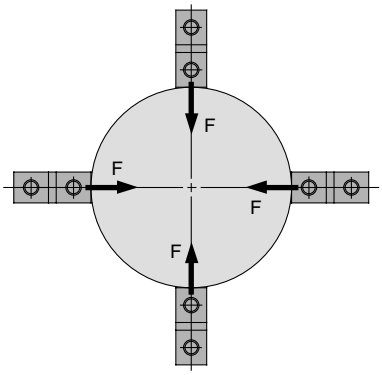

External grip

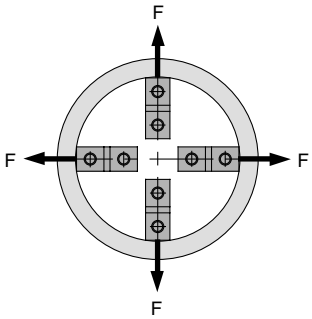

Internal grip

External Gripping Force

MHS4-16D

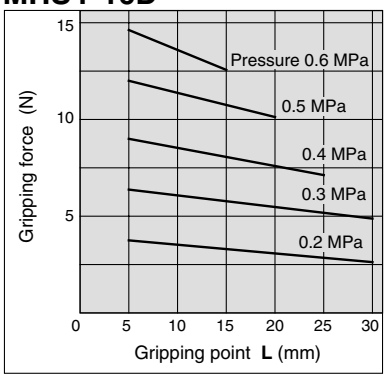

MHS4-20D

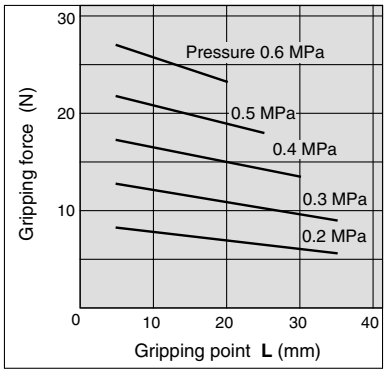

MHS4-25D

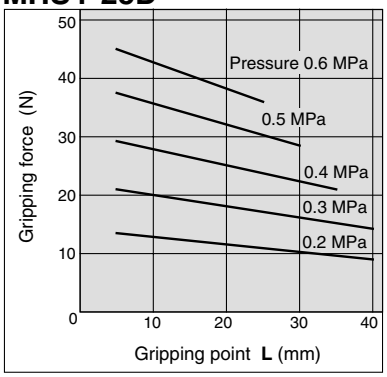

Internal Gripping Force

MHS4-16D

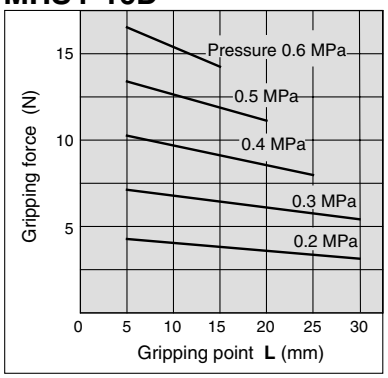

MHS4-20D

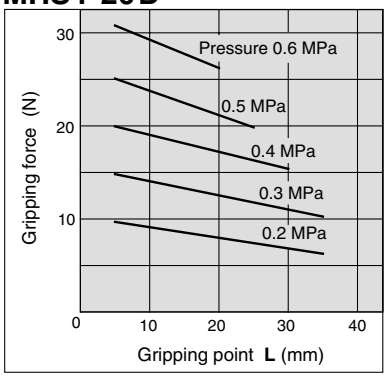

MHS4-25D

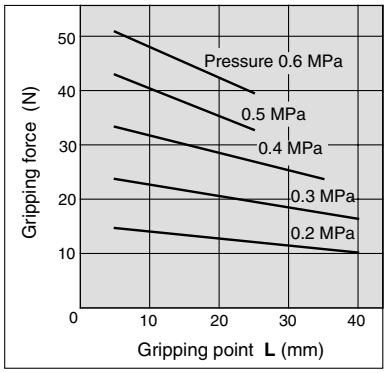

Effective Gripping Force

- Indication of effective gripping force
  The gripping force shown in the tables represents the gripping force of one finger when all fingers and attachments are in contact with the workpiece. The gripping force of Series MHS4 is the same as Series MHS2 while one pair of opposite fingers is used to grip the workpiece and the other pair of fingers is used for positioning.

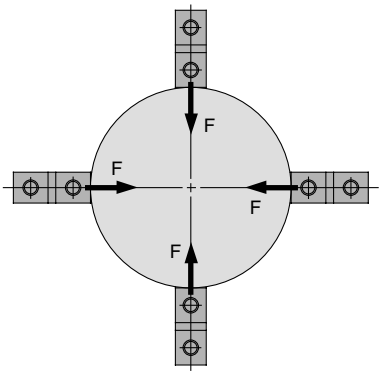

External grip

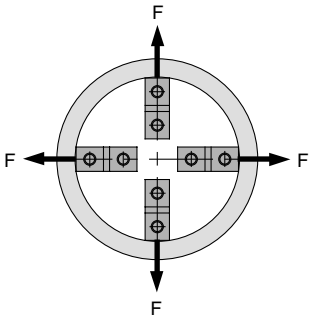

Internal grip

External Gripping Force

MHS4-32D

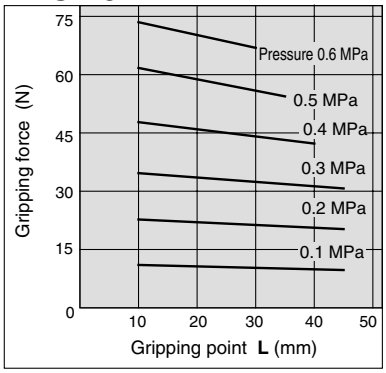

MHS4-40D

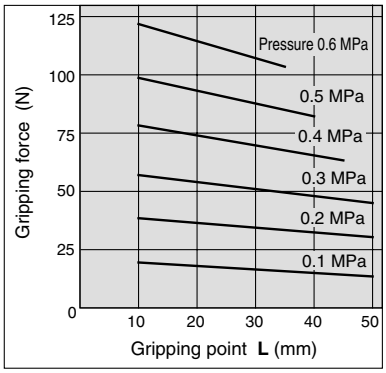

MHS4-50D

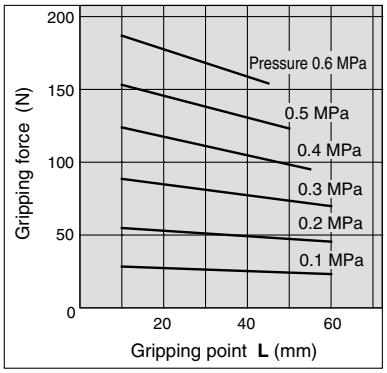

MHS4-63D

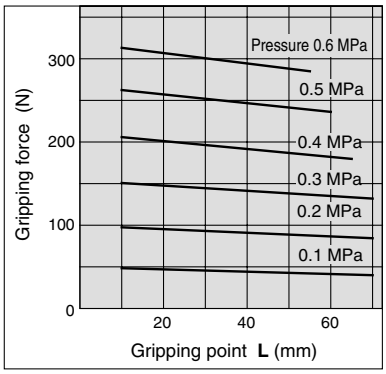

Internal Gripping Force

MHS4-32D

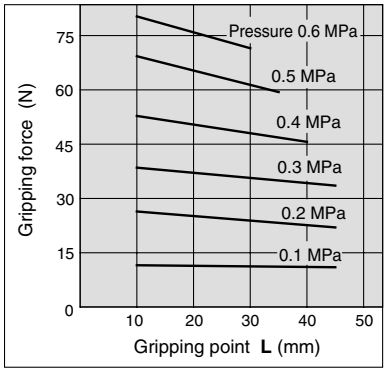

MHS4-40D

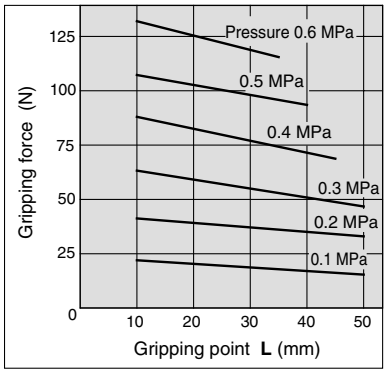

MHS4-50D

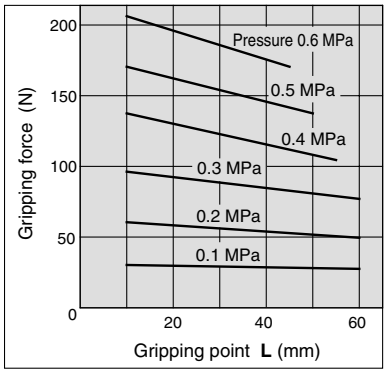

MHS4-63D

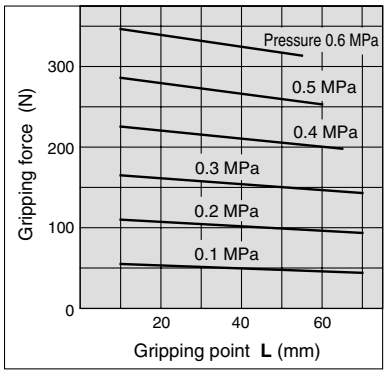

Dimensions

MHS4-16D to 25D

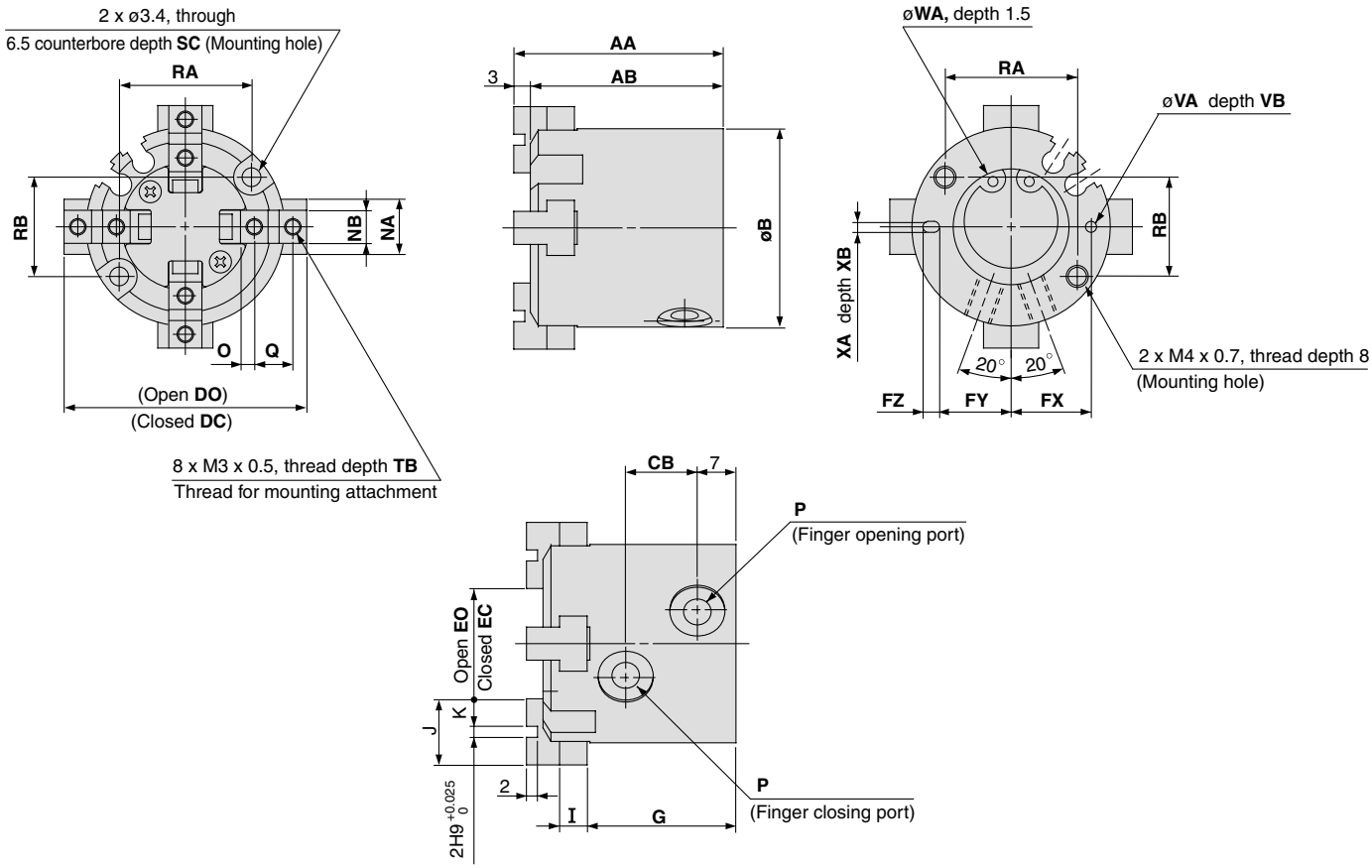

Auto switch mounting groove dimensions (2 locations)

MHS4-16D

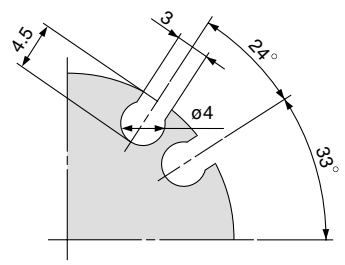

MHS4-20D

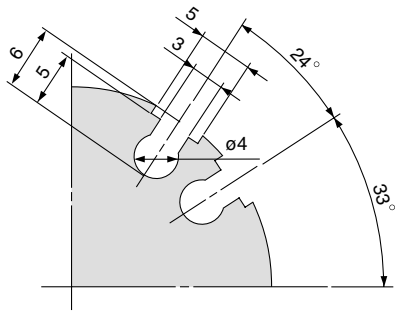

MHS4-25D

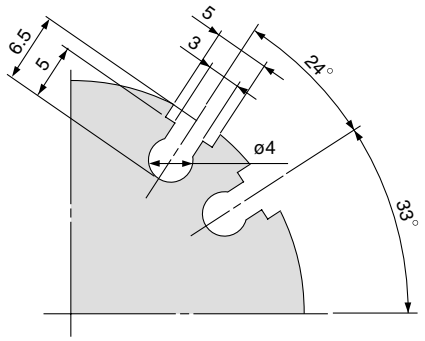

(mm)

Model	AA	AB	B	CB	DC	DO	EC	EO	FX	FY	FZ	G	I	J	K	NA	NB	O	P	Q
MHS4-16D	35	32	30	11	33	37	13	17	12.5	11	3	25	4	10	4	8	5h9 $^{0}_{-0.030}$	2	M3 x 0.5	6
MHS4-20D	38	35	36	13	39	43	15	19	14.5	13	3	27	5	12	5	10	6h9 $^{0}_{-0.030}$	2.5	M5 x 0.8	7
MHS4-25D	40	37	42	15	48	54	20	26	17	14.5	5	28	5	14	6	12	6h9 $^{0}_{-0.030}$	3	M5 x 0.8	8

Model	RA	RB	SC	TB	VA	VB	WA	XA	XB
MHS4-16D	18	16	8	5	2H9 $^{+0.025}_{0}$	2	17H9 $^{+0.043}_{0}$	2H9 $^{+0.025}_{0}$	2
MHS4-20D	24	18	9.5	6	2H9 $^{+0.025}_{0}$	2	21H9 $^{+0.052}_{0}$	2H9 $^{+0.025}_{0}$	2
MHS4-25D	26	22	10	6	3H9 $^{+0.025}_{0}$	3	26H9 $^{+0.052}_{0}$	3H9 $^{+0.025}_{0}$	3

Dimensions

MHS4-32D/40D

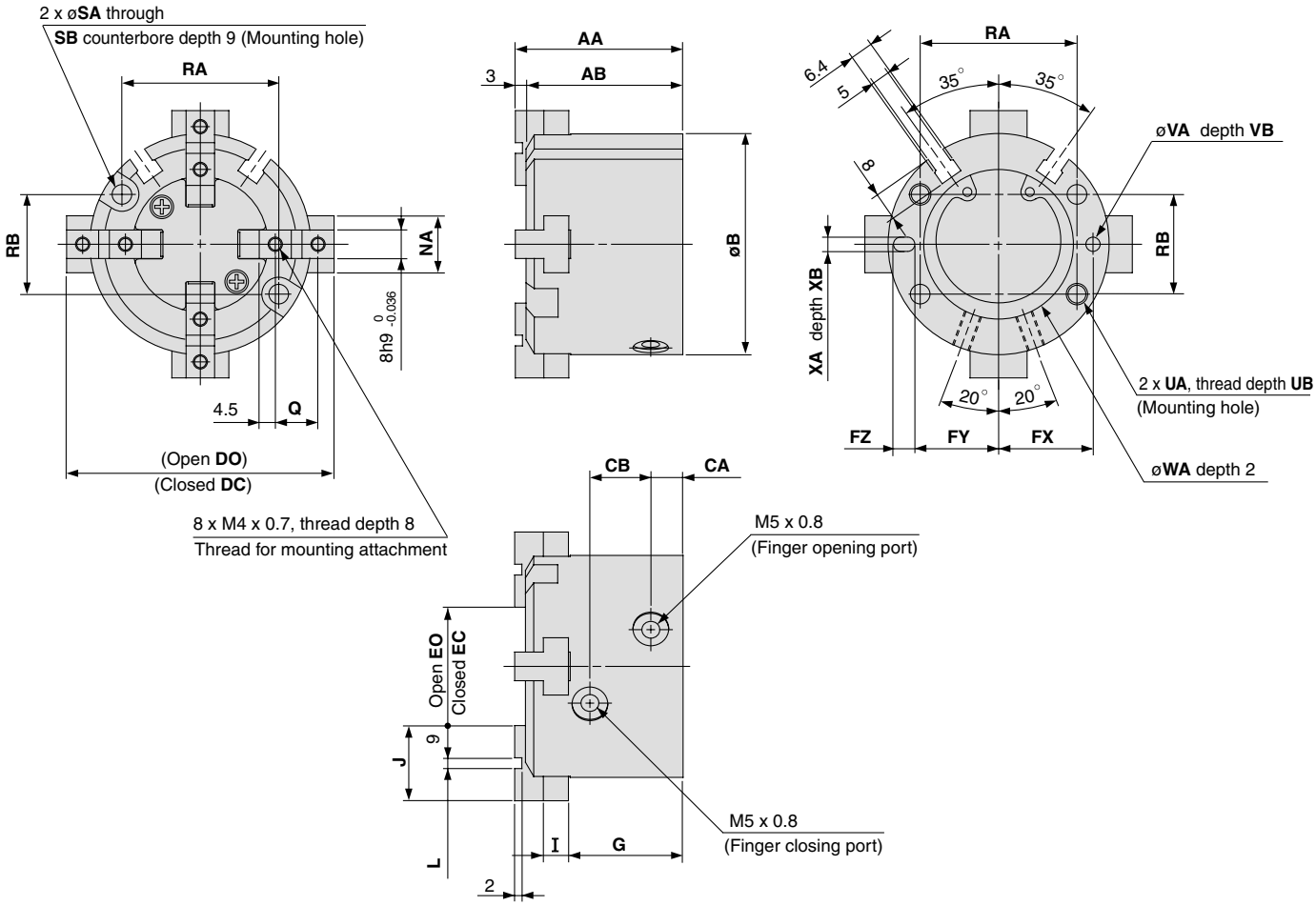

(mm)

Model	AA	AB	B	CA	CB	DC	DO	EC	EO	FX	FY	FZ	G	I	J	L	NA	Q	RA	RB	SA
MHS4-32D	44	41	56	8	16	60	68	20	28	23	20.5	5	30.5	6	20	$2H9^{+0.025}_{0}$	14	11	38	25	4.5
MHS4-40D	47	44	62	9	17	66	74	24	32	26.5	23.5	6	32	7	21	$3H9^{+0.025}_{0}$	16	12	44	28	5.5

Model	SB	UA	UB	VA	VB	WA	XA	XB
MHS4-32D	8	M5 x 0.8	10	$3H9^{+0.025}_{0}$	3	$34H9^{+0.062}_{0}$	$3H9^{+0.025}_{0}$	3
MHS4-40D	9.5	M6 x 1	12	$4H9^{+0.030}_{0}$	4	$42H9^{+0.062}_{0}$	$4H9^{+0.030}_{0}$	4

MHS4-50D/63D

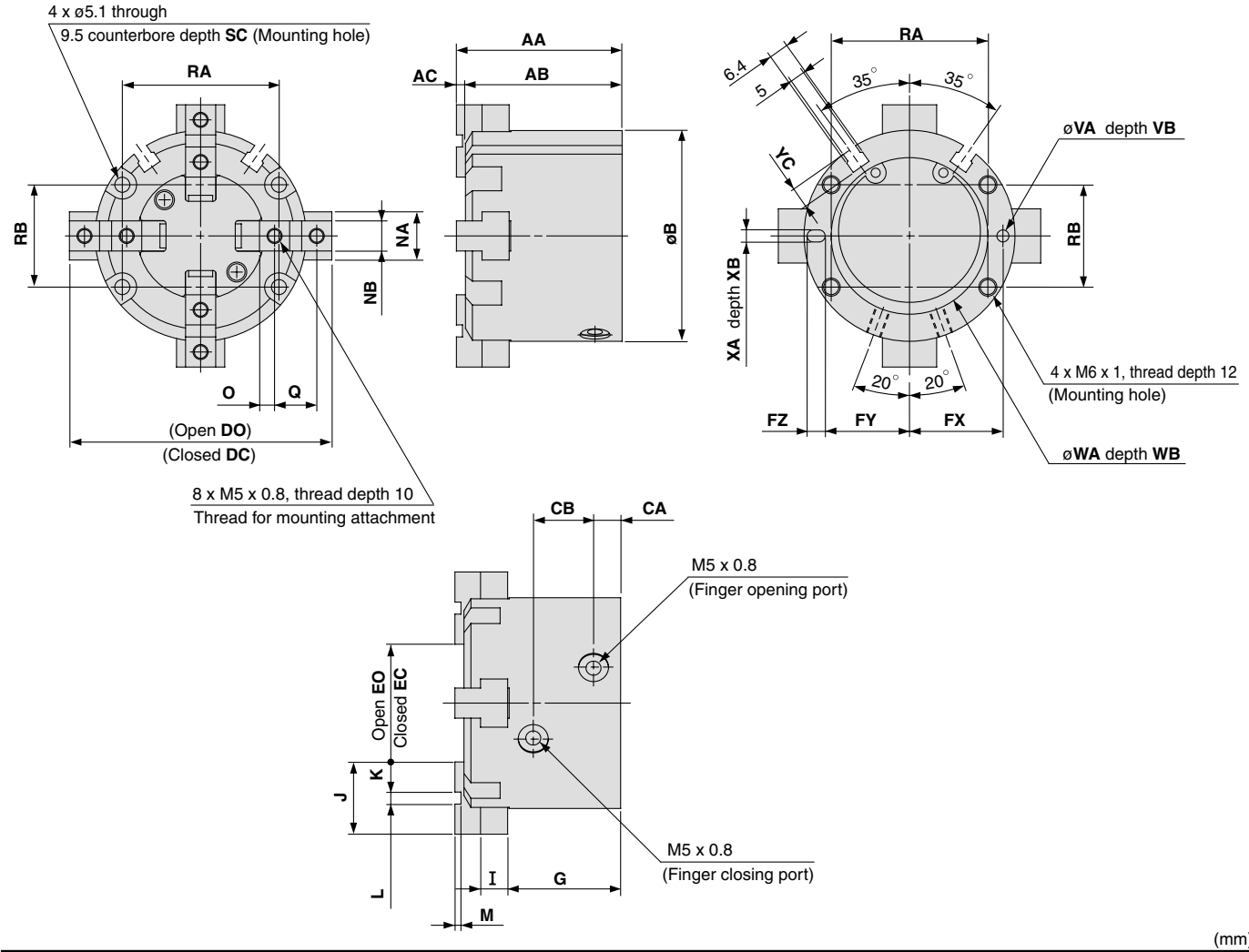

(mm)

Model	AA	AB	AC	B	CA	CB	DC	DO	EC	EO	FX	FY	FZ	G	I	J	K	L	M	NA	NB
MHS4-50D	55	52	3	70	9	20	74	86	26	38	31	28	6	37.5	9	24	10	4H9 $^{+0.030}_{0}$	2	18	10h9 $^{0}_{-0.036}$
MHS4-63D	66	62	4	86	12	22	91	107	35	51	38	34.5	7	44	11	28	11	6H9 $^{+0.030}_{0}$	3	24	12h9 $^{0}_{-0.043}$

Model	O	Q	RA	RB	SC	VA	VB	WA	WB	XA	XB	YC
MHS4-50D	5	14	52	34	12	4H9 $^{+0.030}_{0}$	4	52H9 $^{+0.074}_{0}$	2	4H9 $^{+0.030}_{0}$	4	7
MHS4-63D	5.5	17	66	38	14	5H9 $^{+0.030}_{0}$	5	65H9 $^{+0.074}_{0}$	2.5	5H9 $^{+0.030}_{0}$	5	7.5

Series MHS4 Detailed Dimensions of Mounting Portion of End Plate

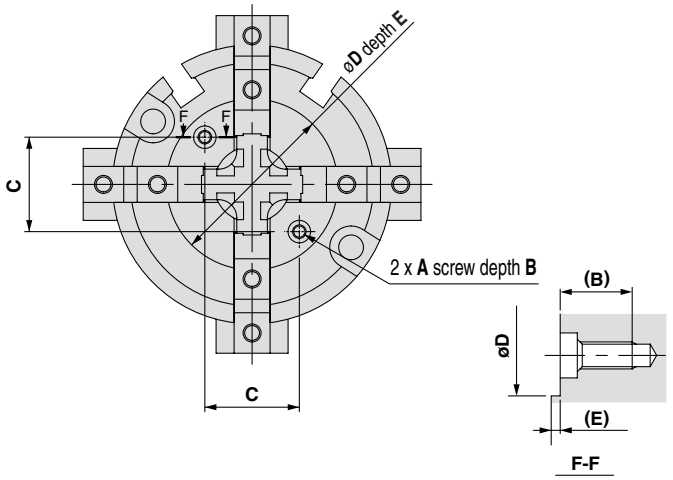

Model	A	B	C	øD	E
MHS4-16D	M2 x 0.4	5.5	11	21	0.5
MHS4-20D		5.4	13	24	0.6
MHS4-25D			15	27	
MHS4-32D		5.2	18	32	0.8
MHS4-40D	M3 x 0.5	8	21	38	1
MHS4-50D			24	42	
MHS4-63D			32	54	

Auto Switch Installation Examples and Mounting Positions

Various auto switch applications are possible through different combinations of auto switch quantities and detecting positions.

1) Detection when Gripping Exterior of Workpiece

Detection example			1. Confirmation of fingers in reset position	2. Confirmation of workpiece held	3. Confirmation of workpiece released
Position to be detected			Position of fingers fully opened 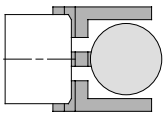	Position when gripping a workpiece 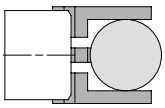	Position of fingers fully closed 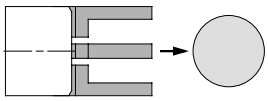
Operation of auto switch			Auto switch turned ON when fingers return. (Light ON)	Auto switch turned ON when gripping a workpiece. (Light ON)	When a workpiece is not held (Abnormal operation): Auto switch to turn ON (Light illuminating)
Detection combinations	One auto switch ∗ One position, any of ①, ②, and ③, can be detected.		●	●	●
	Two auto switches ∗ Two positions of ①, ②, and ③ can be detected.	Pattern A	●	●	—
		Pattern B	—	●	●
		Pattern C	●	—	●
How to determine auto switch installation position			Step 1) Fully open the fingers. 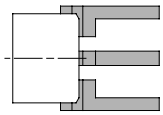	Step 1) Position fingers for gripping a workpiece. 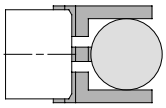	Step 1) Fully close the fingers. 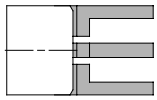
At no pressure or low pressure, connect the auto switch to a power supply, and follow the directions.			Step 2) Insert the auto switch into the auto switch installation groove in the direction shown in the following drawing. 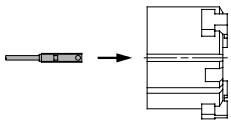 Also, in case of lead wire entry from the finger direction, installation should be from the direction shown in the drawing.		
			Step 3) Slide the auto switch in the direction of the arrow until the indicator light illuminates. 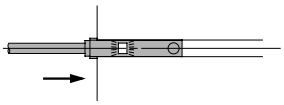 Step 4) Slide the auto switch in the direction of the arrow until the indicator light goes out. 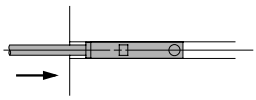 Step 5) Move the auto switch in the opposite direction and fasten until the indicator light illuminates. Move the switch further 0.3 to 0.5 mm beyond the position where the indicator light illuminates. In case of 2-color indicator type, fasten it at the location when the indicator light color changes from red to green. 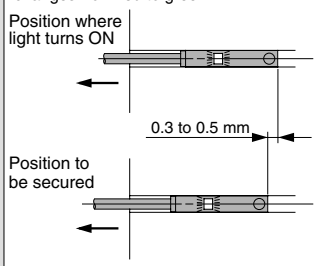	Step 3) Slide the auto switch in the direction of the arrow until the indicator light illuminates. Move the switch further 0.3 to 0.5 mm in the direction of the arrow and fasten it. In case of 2-color indicator type, fasten it at the location when the indicator light color changes from red to green. 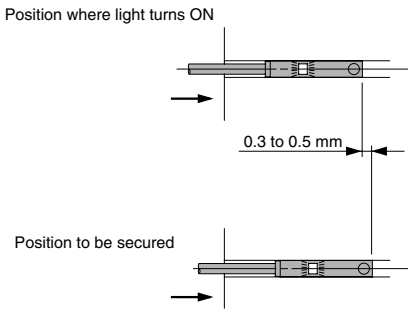	

Note 1) It is recommended that gripping of a workpiece be performed close to the center of the finger stroke.
Note 2) When holding a workpiece close at the end of open/close stroke of fingers, detecting performance of the combinations listed in the above table may be limited, depending on the hysteresis of an auto switch, etc.

Various auto switch applications are possible through different combinations of auto switch quantities and detecting positions.

2) Detection when Gripping Interior of Workpiece

Detection example	1. Confirmation of fingers in reset position	2. Confirmation of workpiece held	3. Confirmation of workpiece released
Position to be detected	Position of fingers fully closed 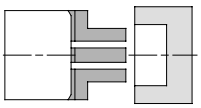	Position when gripping a workpiece 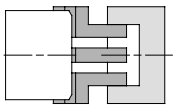	Position of fingers fully opened 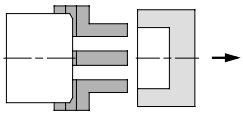
Operation of auto switch	Auto switch turned ON when fingers return. (Light ON)	Auto switch turned ON when gripping a workpiece. (Light ON)	When a workpiece is not held (Abnormal operation): Auto switch to turn ON (Light illuminating)
Detection combinations: One auto switch ＊One position, any of ①, ②, and ③, can be detected.	●	●	●
Detection combinations: Two auto switches ＊Two positions of ①, ②, and ③ can be detected. Pattern A	●	●	—
Detection combinations: Two auto switches ＊Two positions of ①, ②, and ③ can be detected. Pattern B	—	●	●
Detection combinations: Two auto switches ＊Two positions of ①, ②, and ③ can be detected. Pattern C	●	—	●
How to determine auto switch installation position	Step 1) Fully close the fingers. 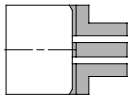	Step 1) Position fingers for gripping a workpiece. 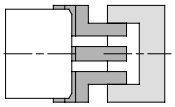	Step 1) Fully open the fingers. 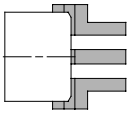
At no pressure or low pressure, connect the auto switch to a power supply, and follow the directions.	Step 2) Insert the auto switch into the auto switch installation groove in the direction shown in the following drawing. 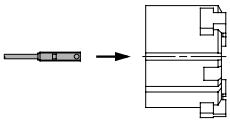 Also, in case of lead wire entry from the finger direction, installation should be from the direction shown in the drawing.		
	Step 3) Slide the auto switch in the direction of the arrow until the indicator light illuminates. Move the switch further 0.3 to 0.5 mm in the direction of the arrow and fasten it. In case of 2-color indicator type, fasten it at the location when the indicator light color changes from red to green. 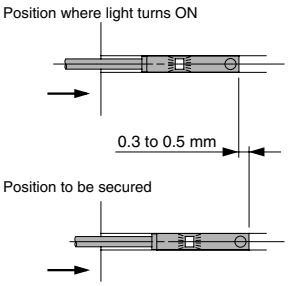	Step 3) Slide the auto switch in the direction of the arrow until the indicator light illuminates. 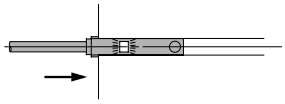 Step 4) Slide the auto switch further in the direction of the arrow until the indicator light goes out. 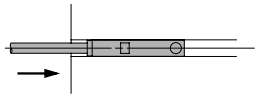 Step 5) Move an auto switch in the opposite direction and fasten it at a position 0.3 to 0.5 mm beyond the position where the indicator light illuminates. In the case of 2-color indicator type, fasten it at the location when the indicator light color changes from red to green. 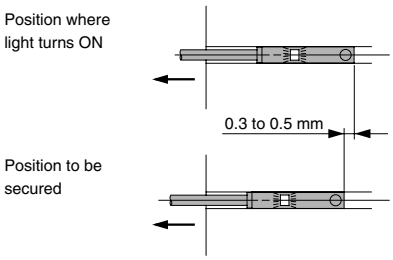	

Note 1) It is recommended that gripping of a workpiece be performed close to the center of the finger stroke.
Note 2) When holding a workpiece close at the end of open/close stroke of fingers, detecting performance of the combinations listed in the above table may be limited, depending on the hysteresis of an auto switch, etc.

Auto Switch Hysteresis

Auto switches have hysteresis similar to micro switches. Use the table below as a guide when adjusting auto switch positions, etc.

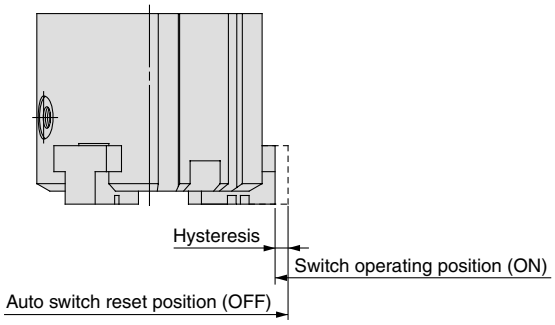

Series MHS□/MHSL

(mm)

Air gripper model \ Auto switch model	Hysteresis (Max. value) D-M9□(V) D-M9□W(V) D-M9□A(V)L
MHS□ MHSL3 - 16D	0.5
MHS□ MHSL3 - 20D	0.5
MHS□ MHSL3 - 25D	0.5
MHS□ MHSL3 - 32D	0.6
MHS□ MHSL3 - 40D	0.6
MHS□ MHSL3 - 50D	0.6
MHS□ MHSL3 - 63D	0.6
MHS□ MHSL3 - 80D	0.6
MHS□ MHSL3 -100D	0.6
MHS□ MHSL3 -125D	0.6

(mm)

Air gripper model \ Auto switch model	Hysteresis (Max. value) D-Y59□/Y69□/Y7P(V) D-Y7□W(V)
MHS□ MHSL3 - 32D	0.7
MHS□ MHSL3 - 40D	0.5
MHS□ MHSL3 - 50D	0.5
MHS□ MHSL3 - 63D	0.5
MHS□ MHSL3 - 80D	0.5
MHS□ MHSL3 -100D	0.5
MHS□ MHSL3 -125D	0.5

Note) The actual mounting position should be adjusted after confirming the auto switch performance.

Series MHSJ/MHSH

(mm)

Air gripper model \ Auto switch model	Hysteresis (Max. value) D-M9□(V) D-M9□W(V) D-M9□A(V)L
MHSJ3 MHSH3 -16D	0.5
MHSJ3 MHSH3 -20D	0.5
MHSJ3 MHSH3 -25D	0.5
MHSJ3 MHSH3 -32D	0.6
MHSJ3 MHSH3 -40D	0.6
MHSJ3 MHSH3 -50D	0.6
MHSJ3 MHSH3 -63D	0.6
MHSJ3 MHSH3 -80D	0.6

Auto Switch Hysteresis

Center pusher/Cylinder type

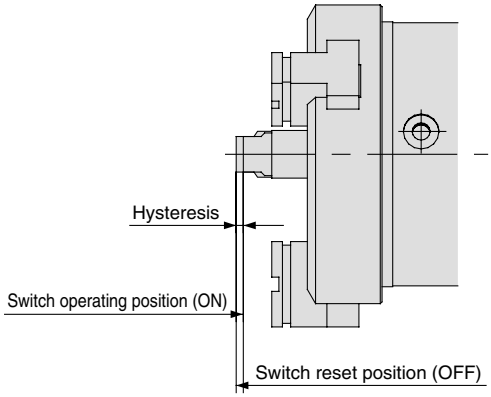

(mm)

Air gripper model \ Auto switch model	Hysteresis (Max. value)
	D-M9□(V) **D-M9□W(V)** **D-M9□A(V)L**
MHSH□3-32DA	0.3
MHSH□3-40DA	0.3
MHSH□3-50DA	0.2
MHSH□3-63DA	0.4
MHSH□3-80DA	0.3

Note) The actual mounting position should be adjusted after confirming the auto switch performance.

Protrusion of Auto Switch from Edge of Body

The projection of an auto switch from the edge of the body is shown in the table below.
Use the table as a guideline for mounting.

(mm)

Direction of auto switch mounting on air gripper

Mounting with lead wire on side opposite the fingers

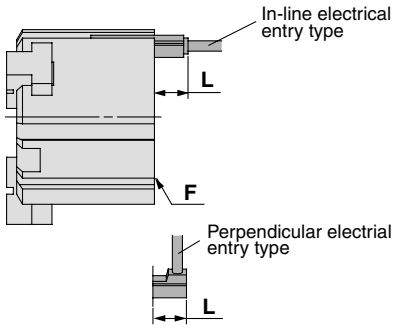

Mounting with lead wire on same side as the fingers

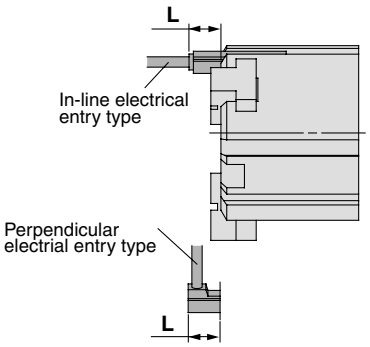

Air gripper model	Lead wire type / Auto switch model / Finger position	In-line entry		Perpendicular entry		In-line entry		Perpendicular entry	
		D-M9□ D-M9□W	**D-M9□AL**	**D-M9□V D-M9□WV**	**D-M9□AVL**	**D-M9□ D-M9□W**	**D-M9□AL**	**D-M9□V D-M9□WV**	**D-M9□AVL**
MHS□-16D	Open	—	1	—	—	1	3	—	1
	Closed	5	7	3	5	—	—	—	—
MHS□-20D	Open	—	—	—	—	—	—	—	—
	Closed	5	7	3	5	—	—	—	—
MHS□-25D	Open	—	—	—	—	—	1	—	—
	Closed	3	5	1	3	—	—	—	—
MHSL3-16D	Open	—	1	—	—	—	—	—	—
	Closed	5	7	3	5	—	—	—	—
MHSL3-20D	Open	—	—	—	—	—	—	—	—
	Closed	5	7	3	5	—	—	—	—
MHSL3-25D	Open	—	—	—	—	—	—	—	—
	Closed	3	5	1	3	—	—	—	—
MHS□-32D	Open	—	—	—	—	—	—	—	—
	Closed	5.5	7.5	3.5	5.5	—	—	—	—
MHS□-40D	Open	—	—	—	—	—	—	—	—
	Closed	5	7	3.5	5	—	—	—	—
MHS□-50D	Open	—	—	—	—	—	—	—	—
	Closed	4.5	6.5	2.5	4.5	—	—	—	—
MHS□-63D	Open	—	—	—	—	—	—	—	—
	Closed	2.5	4.5	0.5	2.5	—	—	—	—
MHS□-80D	Open	—	—	—	—	—	—	—	—
	Closed	—	—	—	—	—	—	—	—
MHS□-100D	Open	—	—	—	—	—	—	—	—
	Closed	—	—	—	—	—	—	—	—
MHS□-125D	Open	—	—	—	—	—	—	—	—
	Closed	—	—	—	—	—	—	—	—
MHSL3-32D	Open	—	—	—	—	—	—	—	—
	Closed	5.5	7.5	3.5	5.5	—	—	—	—
MHSL3-40D	Open	—	—	—	—	—	—	—	—
	Closed	5	7	3.5	5	—	—	—	—
MHSL3-50D	Open	—	—	—	—	—	—	—	—
	Closed	4.5	6.5	2.5	4.5	—	—	—	—
MHSL3-63D	Open	—	—	—	—	—	—	—	—
	Closed	2.5	4.5	0.5	2.5	—	—	—	—
MHSL3-80D	Open	—	—	—	—	—	—	—	—
	Closed	—	—	—	—	—	—	—	—
MHSL3-100D	Open	—	—	—	—	—	—	—	—
	Closed	—	—	—	—	—	—	—	—
MHSL3-125D	Open	—	—	—	—	—	—	—	—
	Closed	—	—	—	—	—	—	—	—

Note 1) There is no protrusion for sections of the table with no values entered.
Note 2) When mounted with lead wires on the finger side, be sure that attachments and workpieces, etc., do not touch switch units or lead wires.
Note 3)The actual mounting position should be adjusted after confirming the auto switch performance.

Protrusion of Auto Switch from Edge of Body

The projection of an auto switch from the edge of the body is shown in the table below.
Use the table as a guideline for mounting.

(mm)

Direction of auto switch mounting on air gripper

Mounting with lead wire on side opposite the fingers

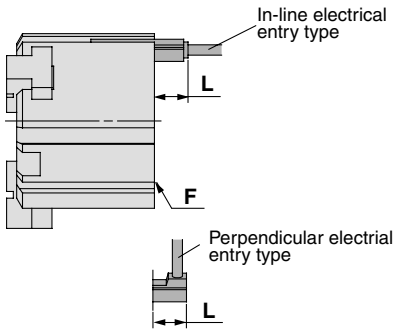

Mounting with lead wire on same side as the fingers

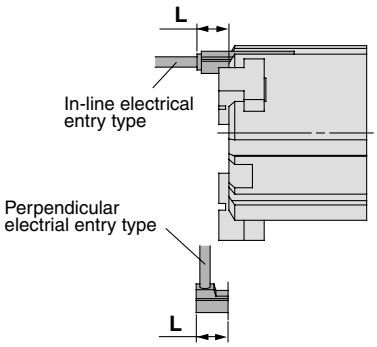

Air gripper model	Finger position (Lead wire type / Auto switch model)	In-line entry		Perpendicular entry	In-line entry		Perpendicular entry
		D-Y59□ D-Y7P D-Y7□W	**D-Y7BAL**	**D-Y69□ D-Y7PV D-Y7□WV**	**D-Y59□ D-Y7P D-Y7□W**	**D-Y7BAL**	**D-Y69□ D-Y7PV D-Y7□WV**
MHS□-32D	Open	—	—	—	—	5	—
	Closed	6	9	4	—	—	—
MHS□-40D	Open	—	—	—	—	2.5	—
	Closed	5.5	8	4	—	—	—
MHS□-50D	Open	—	—	—	—	—	—
	Closed	5	7.5	3	—	—	—
MHS□-63D	Open	—	—	—	—	—	—
	Closed	3	5	1	—	—	—
MHS□-80D	Open	—	—	—	—	—	—
	Closed	—	—	—	—	—	—
MHS□-100D	Open	—	—	—	—	—	—
	Closed	—	—	—	—	—	—
MHS□-125D	Open	—	—	—	—	—	—
	Closed	—	—	—	—	—	—
MHSL3-32D	Open	—	—	—	—	—	—
	Closed	6	9	4	—	—	—
MHSL3-40D	Open	—	—	—	—	—	—
	Closed	5.5	8	4	—	—	—
MHSL3-50D	Open	—	—	—	—	—	—
	Closed	5	7.5	3	—	—	—
MHSL3-63D	Open	—	—	—	—	—	—
	Closed	3	5	1	—	—	—
MHSL3-80D	Open	—	—	—	—	—	—
	Closed	—	—	—	—	—	—
MHSL3-100D	Open	—	—	—	—	—	—
	Closed	—	—	—	—	—	—
MHSL3-125D	Open	—	—	—	—	—	—
	Closed	—	—	—	—	—	—

Note 1) There is no protrusion for sections of the table with no values entered.
Note 2) When mounted with lead wires on the finger side, be sure that attachments and workpieces, etc., do not touch switch units or lead wires.
Note 3)The actual mounting position should be adjusted after confirming the auto switch performance.

Protrusion of Auto Switch from Edge of Body

The projection of an auto switch from the edge of the body is shown in the table below.
Use the table as a guideline for mounting.

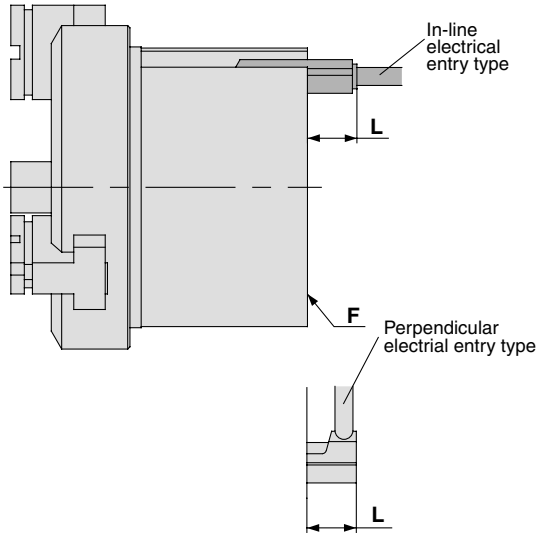

(mm)

Air gripper model	Finger position \ Auto switch model \ Lead wire type	In-line entry		Perpendicular entry	
		D-M9□ D-M9□W	D-M9□AL	D-M9□V D-M9□WV	D-M9□AVL
MHSJ3 MHSH3 -16D	Open	2	4	—	2
	Closed	5.5	7.5	3.5	5.5
MHSJ3 MHSH3 -20D	Open	2	4	—	2
	Closed	5	7	3	5
MHSJ3 MHSH3 -25D	Open	—	3	—	—
	Closed	5	7	3	5
MHSJ3 MHSH3 -32D	Open	—	1	—	—
	Closed	4.5	6.5	2.5	4.5
MHSJ3 MHSH3 -40D	Open	—	—	—	—
	Closed	3	5	1	3
MHSJ3 MHSH3 -50D	Open	—	—	—	—
	Closed	1.5	3.5	—	1.5
MHSJ3 MHSH3 -63D	Open	—	—	—	—
	Closed	—	2	—	—
MHSJ3 MHSH3 -80D	Open	—	—	—	—
	Closed	—	1	—	—

Note 1) Indicates the amount of protrusion from the mounting surface F. There is no protrusion from the finger side.
Note 2) There is no protrusion for sections of the table with no values entered.
Note 3) When mounted with lead wires on the finger side, be sure that attachments and workpieces, etc., do not touch switch units or lead wires.
Note 4) The actual mounting position should be adjusted after confirming the auto switch performance.

Protrusion from Edge of Push Holder (P)

The amount of auto switch protrusion from the push holder (P) end surface is shown in the table below.
Use this as a standard when mounting, etc.

Center Pusher/Cylinder Type

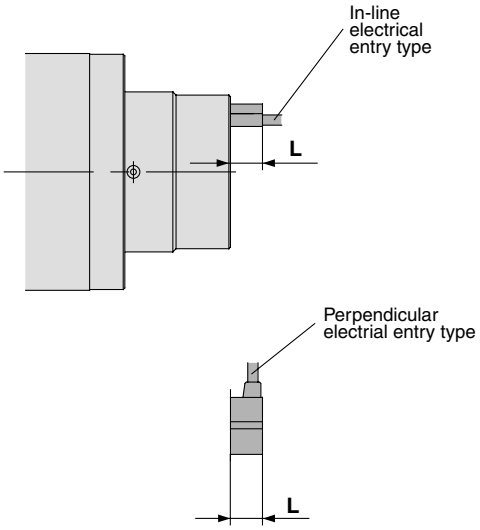

(mm)

Air gripper model	Finger position \ Auto switch model \ Lead wire type	In-line entry		Perpendicular entry	
		D-M9□ D-M9□W	D-M9□AL	D-M9□V D-M9□WV	D-M9□AVL
MHSH□-32DA	Extended	4	2	2	4
	Retracted	9	7	7	9
MHSH□-40DA	Extended	3	—	1	3
	Retracted	8	6	6	8
MHSH□-50DA	Extended	—	—	—	—
	Retracted	7.5	5.5	5.5	7.5
MHSH□-63DA	Extended	—	—	—	—
	Retracted	7	5	5	7
MHSH□-80DA	Extended	—	—	—	—
	Retracted	4	2	2	4

Note) The actual mounting position should be adjusted after confirming the auto switch performance.

Auto Switch Mounting

Applicable models:

MHS2-16, 20, 25
MHS3-16, 20, 25
MHSJ3-16, 20, 25, 32, 40, 50, 63, 80
MHSH3-16, 20, 25, 32, 40, 50, 63, 80
MHSH3-A32, 40, 50, 63, 80
MHSL3-16, 20, 25
MHS4-16, 20, 25

To set the auto switch, insert the auto switch into the installation groove of the gripper from the direction indicated in the following drawing.
After setting the position, tighten the attached auto switch mounting set screw with a flat head watchmaker's screwdriver.

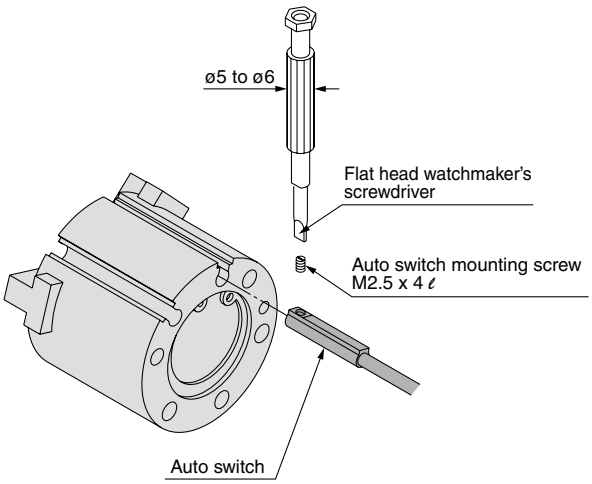

Note) Use a watchmaker's screwdriver with a grip diameter of 5 to 6 mm to tighten the auto switch mounting screw. The tightening torque should be about 0.05 to 0.15 N·m.

Applicable models:

MHS2-32, 40, 50, 63
MHS3-32, 40, 50, 63, 80, 100, 125
MHSL3-32, 40, 50, 63, 80, 100, 125
MHS4-32, 40, 50, 63

(1) To set the auto switch, insert the auto switch into the installation groove of the cylinder as shown below and set it roughly.
(2) Insert the auto switch into the auto switch bracket installation groove.
(3) After confirming the detecting position, tighten the set screws (M2.5) attached to the auto switch and set it.
(4) Be sure to change the detecting position in the state of (2).

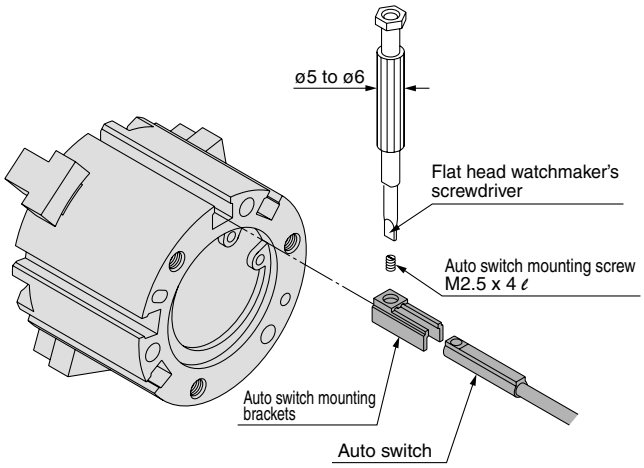

Auto Switch Mounting Bracket Part No.

Auto switch model	Auto switch mounting bracket part no.
D-M9□(V) **D-M9□W(V)** **D-M9□A(V)L**	BMG2-012

Note) Use a watchmaker's screwdriver with a grip diameter of 5 to 6 mm to tighten the set screw (M2.5).
The tightening torque should be 0.05 to 1 N·m. It should be turned about 90° beyond the point at which tightening can be felt.

Mounting Air Grippers/Series MHS

Possible to mount from 2 directions.

How to Mount Air Gripper

Body tapped

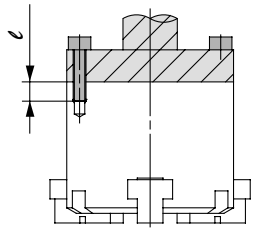

Series MHS2

Model	Applicable bolts	Max. tightening torque N·m	Max. screw-in depth ℓ mm
MHS2-16D	M4 x 0.7	2.1	8
MHS2-20D	M4 x 0.7	2.1	8
MHS2-25D	M4 x 0.7	2.1	8
MHS2-32D	M5 x 0.8	4.3	10
MHS2-40D	M6 x 1	7.3	12
MHS2-50D	M6 x 1	7.3	12
MHS2-63D	M6 x 1	7.3	12

Series MHS3, MHSL3

Model	Applicable bolts	Max. tightening torque N·m	Max. screw-in depth ℓ mm
MHS3 MHSL3-16D	M3 x 0.5	0.88	6
MHS3 MHSL3-20D	M3 x 0.5	0.88	6
MHS3 MHSL3-25D	M4 x 0.7	2.1	6
MHS3 MHSL3-32D	M4 x 0.7	2.1	6
MHS3 MHSL3-40D	M5 x 0.8	4.3	10
MHS3 MHSL3-50D	M5 x 0.8	4.3	10
MHS3 MHSL3-63D	M6 x 1	7.3	12
MHS3 MHSL3-80D	M6 x 1	7.3	12
MHS3 MHSL3-100D	M8 x 1.25	18	16
MHS3 MHSL3-125D	M10 x 1.5	36	20

Series MHS4

Model	Applicable bolts	Max. tightening torque N·m	Max. screw-in depth ℓ mm
MHS4-16D	M4 x 0.7	2.1	8
MHS4-20D	M4 x 0.7	2.1	8
MHS4-25D	M4 x 0.7	2.1	8
MHS4-32D	M5 x 0.8	4.3	10
MHS4-40D	M6 x 1	7.3	12
MHS4-50D	M6 x 1	7.3	12
MHS4-63D	M6 x 1	7.3	12

How to Mount Air Gripper

Body tapped

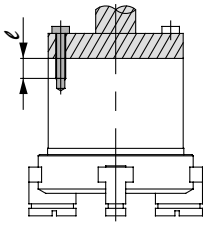

Series MHSJ3, MHSH3

Model	Applicable bolts	Max. tightening torque N·m	Max. screw-in depth ℓ mm
MHSJ3 MHSH3-16D	M4 x 0.7	2.1	8
MHSJ3 MHSH3-20D	M4 x 0.7	2.1	8
MHSJ3 MHSH3-25D	M4 x 0.7	2.1	8
MHSJ3 MHSH3-32D	M4 x 0.7	2.1	8
	M5 x 0.8	3.2	10
MHSJ3 MHSH3-40D	M4 x 0.7	2.1	8
	M5 x 0.8	3.2	10
MHSJ3 MHSH3-50D	M5 x 0.8	3.2	10
	M6 x 1	7.3	12
MHSJ3 MHSH3-63D	M6 x 1	7.3	12
	M8 x 1.25	18	16
MHSJ3 MHSH3-80D	M6 x 1	7.3	12
	M8 x 1.25	18	16

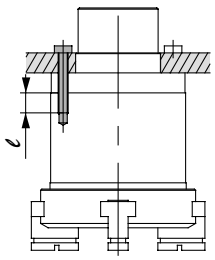

Series MHSH (Center pusher)

Model	Applicable bolts	Max. tightening torque N·m	Max. screw-in depth ℓ mm
MHSH3-32DA MHSH3-32DB	M5 x 0.8	3.2	10
MHSH3-40DA MHSH3-40DB	M5 x 0.8	3.2	10
MHSH3-50DA MHSH3-50DB	M6 x 1	7.3	12
MHSH3-63DA MHSH3-63DB	M8 x 1.25	18	16
MHSH3-80DA MHSH3-80DB	M8 x 1.25	18	16

Body through-hole

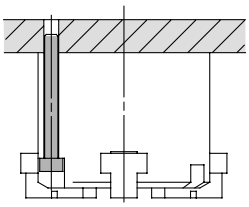

Series MHS2

Model	Applicable bolts	Max. tightening torque N·m
MHS2-16D	M3 x 0.5	0.88
MHS2-20D	M3 x 0.5	0.88
MHS2-25D	M3 x 0.5	0.88
MHS2-32D	M4 x 0.7	2.1
MHS2-40D	M5 x 0.8	4.3
MHS2-50D	M5 x 0.8	4.3
MHS2-63D	M5 x 0.8	4.3

Series MHS3, MHSL3

Model	Applicable bolts	Max. tightening torque N·m
MHS3 MHSL3-16D	M3 x 0.5	0.88
MHS3 MHSL3-20D	M3 x 0.5	0.88
MHS3 MHSL3-25D	M4 x 0.7	2.1
MHS3 MHSL3-32D	M4 x 0.7	2.1
MHS3 MHSL3-40D	M5 x 0.8	4.3
MHS3 MHSL3-50D	M5 x 0.8	4.3
MHS3 MHSL3-63D	M6 x 1	7.3
MHS3 MHSL3-80D	M6 x 1	7.3
MHS3 MHSL3-100D	M8 x 1.25	18
MHS3 MHSL3-125D	M10 x 1.5	36

Series MHS4

Model	Applicable bolts	Max. tightening torque N·m
MHS4-16D	M3 x 0.5	0.88
MHS4-20D	M3 x 0.5	0.88
MHS4-25D	M3 x 0.5	0.88
MHS4-32D	M4 x 0.7	2.1
MHS4-40D	M5 x 0.8	4.3
MHS4-50D	M5 x 0.8	4.3
MHS4-63D	M5 x 0.8	4.3

Specific Product Precautions 2

Be sure to read before handling.

Mounting Air Grippers/Series MHS

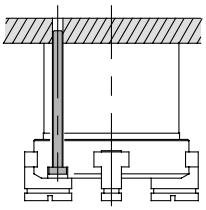

Series MHSJ3, MHSH3

Model	Applicable bolts	Max. tightening torque N·m
MHSJ3-16D MHSH3	M3 x 0.5	0.88
MHSJ3-20D MHSH3	M3 x 0.5	0.88
MHSJ3-25D MHSH3	M3 x 0.5	0.88
MHSJ3-32D MHSH3	M4 x 0.7	2.1
MHSJ3-40D MHSH3	M4 x 0.7	2.1
MHSJ3-50D MHSH3	M5 x 0.8	4.3
MHSJ3-63D MHSH3	M6 x 1	7.3
MHSJ3-80D MHSH3	M6 x 1	7.3

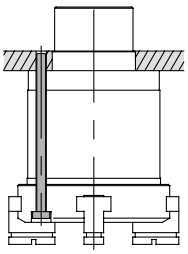

Series MHSH (Center pusher)

Model	Applicable bolts	Max. tightening torque N·m
MHSH3-32DA MHSH3-32DB	M4 x 0.7	2.1
MHSH3-40DA MHSH3-40DB	M4 x 0.7	2.1
MHSH3-50DA MHSH3-50DB	M5 x 0.8	4.3
MHSH3-63DA MHSH3-63DB	M6 x 1	7.3
MHSH3-80DA MHSH3-80DB	M6 x 1	7.3

Note) When using the through-holes to mount models MHSJ3 and MHSHJ3, first remove the dust cover from the product, and after screwing it into place, reinstall the dust cover.

How to Mount the Attachment to the Finger

Make sure to mount the attachments on fingers with the tightening torque in the table below by using bolts, etc., for the female threads on fingers.

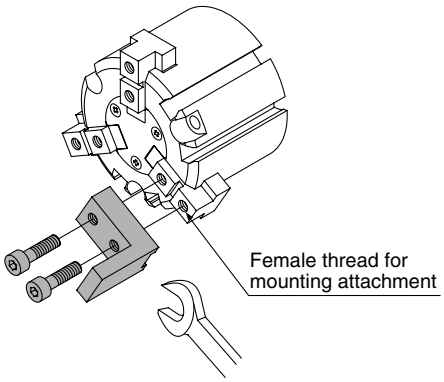

Model	Applicable bolts	Max. tightening torque N·m
MHS□-16D	M3 x 0.5	0.59
MHSJ3-20D		
MHSH3-25D		
MHSL3-32D	M4 x 0.7	1.4
MHSL3-40D		
MHSL3-50D	M5 x 0.8	2.8
MHSL3-63D		
MHSL3-80D	M6 x 1	4.8
MHSL3-100D	M8 x 1.25	12
MHSL3-125D	M10 x 1.5	24