High Purity Chemical Valve/Air Operated/Compact Type

Series LVD

Clean Wet Series

Space saving, compact type is available.

Compact type is introduced as a new series to complement conventional Series LVC with integral fittings.
Select a series according to the flow rate and installation requirements.
Mounting base dimensions conform to SEMI Standard, F65-1101. (Except for LVD10)

Body: New PFA
Diaphragm: PTFE
Actuator section: PPS

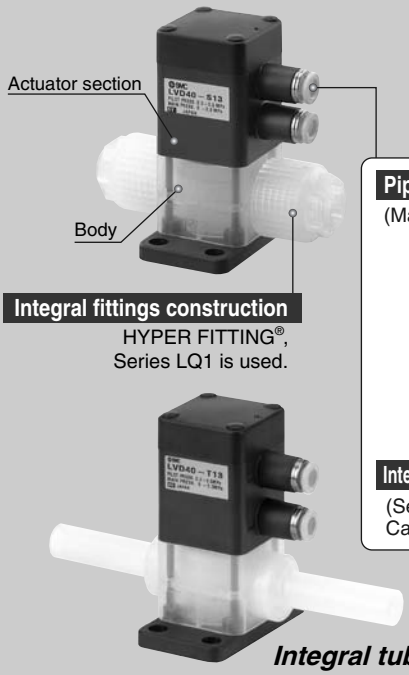

Integral fittings construction
HYPER FITTING®, Series LQ1 is used.

Piping from 4 directions are possible.
(Made to Order)

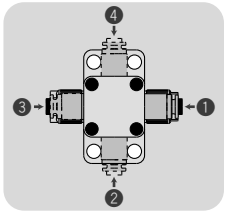

Integral clean One-touch fitting construction
(Series KP is used.)
Can select female thread (M5 x 0.8).

Integral tubing (construction)

Dimension across inlet/ outlet ports: Reduced by up to 29%

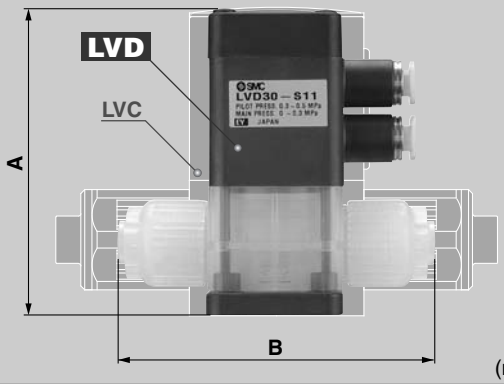

(mm)

	Class2		Class3		Class4		Class5	
	LVC20	LVD20	LVC30	LVD30	LVC40	LVD40	LVC50	LVD50
A	54.5	54.5	79	79.5	96	82	129	105.5
B	79	67	106	83	131	93	154	114

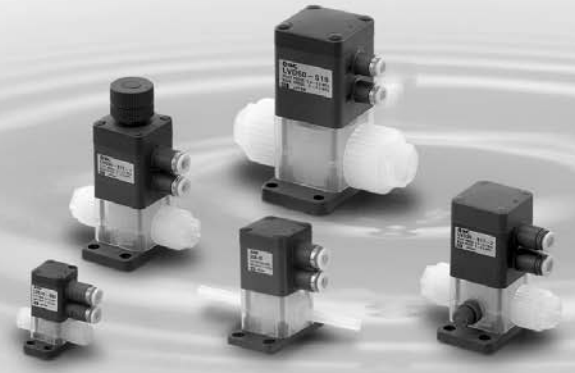

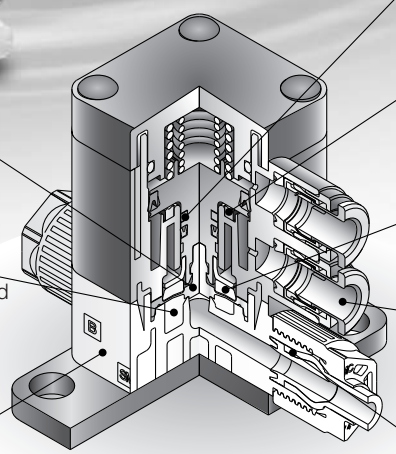

Guide ring
Eliminates lateral motion of the poppet which reduces internal leakage.

Piston damper
Absorbs piston momentum to minimize impact-induced particle generation.

Buffer
Protects diaphragm from deformation and damage due to back pressure.

Pilot port
Integral clean One-touch fittings construction
Can select female thread (M5 x 0.8).

Integral fittings construction
Offers quadruple seal construction. Nut lock mechanism. High flexural strength. Different tubing sizes can be selected.

Diaphragm (PTFE)
Special diaphragm construction ensures gentle opening and closing that prevents the formation of micro-bubbles.

Minimal residual liquid
Residual liquid is minimized by the tapered shape and integral fitting construction, allowing liquid to flow smoothly, achieving improved swept flow characteristics.

Body (New PFA)
Compatible with chemicals such as acids, bases and ultra de-ionized water.

Option

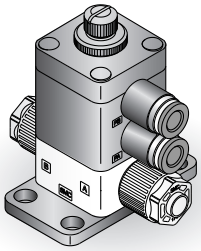

With flow rate adjustment

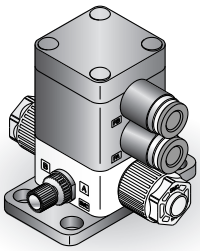

With bypass

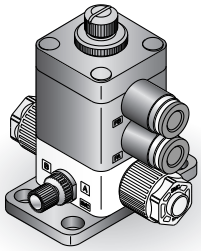

With flow rate adjustment & bypass

Suck Back

P.497

Variations

[Integral fittings] ··· P.495

Orifice diameter	Flow characteristics Av x 10^{-6} m^2 (Cv)	Series	Applicable tubing size														
			Metric size								Inch size						
			3	4	6	8	10	12	19	25	1/8	3/16	1/4	3/8	1/2	3/4	1
2	2.1 (0.09)	LVD10	○	○							○						
4	8.4 (0.35)	LVD20	●	●	○						●	●	○				
8	31.2 (1.3)	LVD30			●	●	○						●	○			
10	45.6 (1.9)	LVD40					●	○						●	○		
16	120 (5)	LVD50						●	○						●	○	

● With reducer ○ Basic size

[Integral tubing (construction)] ··· P.502

Orifice diameter	Flow characteristics Av x 10^{-6} m^2 (Cv)	Series	Applicable tubing size								
			Metric size					Inch size			
			6	8	10	12	19	1/4	3/8	1/2	3/4
4	8.4 (0.35)	LVD20	○					○			
8	31.2 (1.3)	LVD30			○				○		
10	45.6 (1.9)	LVD40				○				○	
16	120 (5)	LVD50					○				○

Integral Fitting Type (Hyper Fittings)

Series LVD

How to Order

LVD 1 0 – S 03 ☐ ☐ – ☐ ☐

Body class

Symbol	Body class	Orifice dia.
1	1	ø2
2	2	ø4
3	3	ø8
4	4	ø10
5	5	ø16

Valve type

0	N.C.
1	N.O.
2	Double acting

Note) Refer to "Variations" in the table below for valve type combinations.

Applicable tubing size

Symbol	Connecting tubing outside diameter	Body class 1	2	3	4	5
Metric sizes						
03	ø3	○	●			
04	ø4	○	●			
06	ø6		○	●		
08	ø8			●		
10	ø10			○	●	
12	ø12				○	●
19	ø19					○
Inch sizes						
03	1/8	○	●			
05	3/16		●			
07	1/4		○	●		
11	3/8			○	●	
13	1/2				○	●
19	3/4					○

○ Basic size ● With reducer

Option

Nil	None
1	With flow rate adjustment
2	With bypass
3	With flow rate adjustment & bypass

Note) Refer to "Variations" in the table below for option combinations. Options can not be combined each other.

Material

Symbol	Body	Actuator section / End plate	Diaphragm	Note
Nil	PFA	PPS	PTFE	—
N	PFA	PPS	PTFE	Ammonium hydroxide compatible

Pilot port thread type

Symbol	Body class	Thread type
Nil	1	ø4 One-touch fitting
	2, 3, 4, 5	ø6 One-touch fitting
2	1, 2, 3, 4, 5	M5 x 0.8

Port B (OUT) different dia. size

Symbol	Application
Nil	Ports A & B same size
Refer to the applicable tubing table to the left	Different diameter tubings can be selected within the same body class. Different diameter tubing can not be selected for the body size 1.

Variations

Type	Symbol	Valve type	LVD10	LVD20	LVD30	LVD40	LVD50
		Orifice diameter	ø2	ø4	ø8	ø10	ø16
		Tubing O.D. Metric	3, 4	3, 4, 6	6, 8, 10	10, 12	12, 19
		Tubing O.D. Inch	1/8	1/8, 3/16, 1/4	1/4, 3/8	3/8, 1/2	1/2, 3/4
Basic type 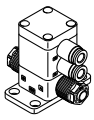	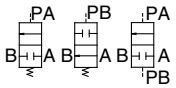 N.C. N.O. Double acting	N.C.	○	○	○	○	○
		N.O.	○	○	○	○	○
		Double acting	○	○	○	○	○
With flow rate adjust-ment 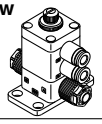	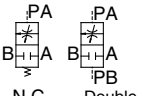 N.C. Double acting	N.C.	○	○	○	○	○
		Double acting	○	○	○	○	○
With bypass 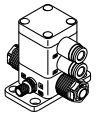	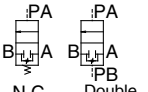 N.C. Double acting	N.C.	—	○	○	○	○
		Double acting	—	○	○	○	○
With flow rate adjust-ment & bypass 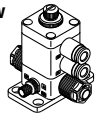	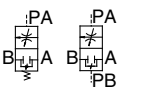 N.C. Double acting	N.C.	—	○	○	○	○
		Double acting	—	○	○	○	○

Standard Specifications

Model		LVD10	LVD20	LVD30	LVD40	LVD50
Tubing O.D.	Metric	3, 4	3, 4, 6	6, 8, 10	10, 12	12, 19
	Inch	1/8	1/8, 3/16, 1/4	1/4, 3/8	3/8, 1/2	1/2, 3/4
Orifice diameter		ø2	ø4	ø8	ø10	ø16
Flow characteristics	Av x 10^{-6}m²	2.1	8.4	31.2	45.6	120
	Cv	0.09	0.35	1.3	1.9	5
Withstand pressure (MPa)		1				
Operating pressure (MPa) <A→B flow>		0 to 0.5		0 to 0.3		
Back pressure (MPa)		0.3 or less		0.2 or less		
Valve leakage (cm³/min)		0 (with water pressure)				
Pilot air pressure (MPa)		0.3 to 0.5				
Pilot port size	One-touch fitting	ø4 x ø3 tubing	ø6 x ø4 tubing			
	Threaded	M5 x 0.8				
Fluid temperature (°C)		0 to 100				
Ambient temperature (°C)		0 to 60				
Mass (kg)		0.04	0.09	0.16	0.19	0.40

Different Diameter Tubing Applicable with Reducer

Different diameter tubing can be selected (within a body class) by using a nut and insert bushing (reducer).
Different diameter tubing can not be selected for the body size 1.

● With reducer

Body class	Tubing O.D.												
	Metric sizes							Inch sizes					
	3	4	6	8	10	12	19	1/8	3/16	1/4	3/8	1/2	3/4
1	○	○	—	—	—	—	—	○	—	—	—	—	—
2	●	●	○	—	—	—	—	●	●	○	—	—	—
3	—	—	●	●	○	—	—	—	—	●	○	—	—
4	—	—	—	—	●	○	—	—	—	—	●	○	—
5	—	—	—	—	—	●	○	—	—	—	—	●	○

Note) Refer to page 505 for information on changing tubing sizes.

⚠ Specific Product Precautions

Be sure to read before handling. Refer to front matters 42 and 43 for Safety Instructions, and pages 507 to 509 for High Purity Chemical Air Operated Valve/Compact Type Precautions.

Piping

⚠ Caution

1. Connect tubing with special tools.

Refer to the pamphlet "High-Purity Fluoropolymer Fittings HYPER FITTING®/Series LQ1, 2 Work Procedure Instructions" (M-E05-1) for connecting tubing and special tools. (Downloadable from our web site.)

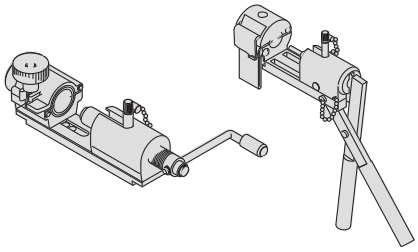

⚠ Caution

2. Tighten the nut to the end surface of the body. As a guide, refer to the proper tightening torques shown below.

Tightening torque for piping

Body class	Torque (N·m)
2	0.3 to 0.4
3	0.8 to 1.0
4	1.0 to 1.2
5	2.5 to 3.0

Suck Back

A change of volume inside the suck back valve pulls in liquid at the end of the nozzle to prevent dripping.

Pilot port with One-touch fittings

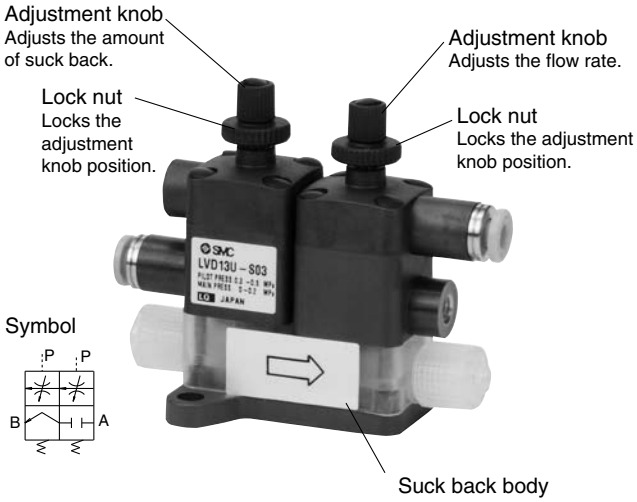

Pilot port threaded type

Standard Specifications

Model		LVD13U
Tubing O.D.	Metric sizes	3, 4
	Inch sizes	1/8
Orifice diameter		ø2
Flow characteristics	Av x 10^{-6}m²	2.1
	Cv	0.09
Withstand pressure (MPa)		1
Operating pressure (MPa)		0 to 0.2
Maximum suck back volume (cm³)		0.03
Pilot air pressure (MPa)		0.3 to 0.5
Pilot port size	One-touch fitting	ø4 x ø3 tubing
	Threaded	M5 x 0.8
Fluid temperature (°C)		0 to 100
Ambient temperature (°C)		0 to 60
Mass (kg)		0.07

How to Order

LVD 1 3 U−S 03 ☐

Body class

Symbol	Body class
1	1

Valve type

3	Suck back valve

Pilot port configuration

Nil	ø4 One-touch fitting
2	M5 x 0.8

Applicable tubing size

Symbol	Connecting tubing O.D.
03	ø3, 1/8
04	ø4

Construction

Standard type
N.C. type

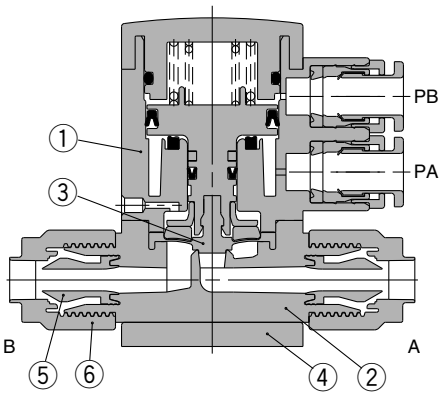

N.O. type

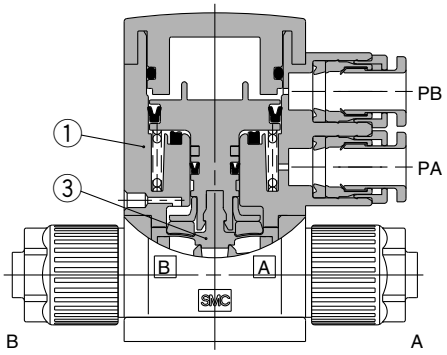

Double acting type

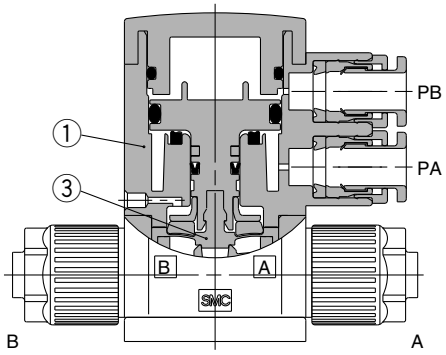

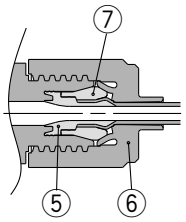

With reducer

With flow rate adjustment

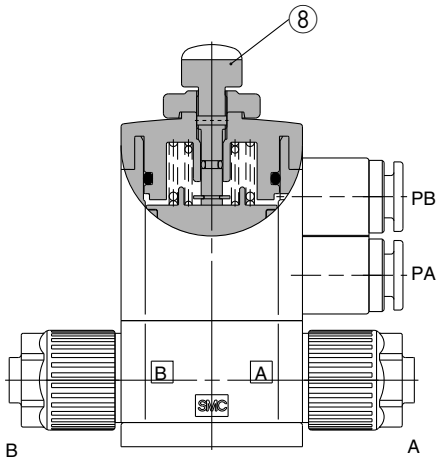

With bypass

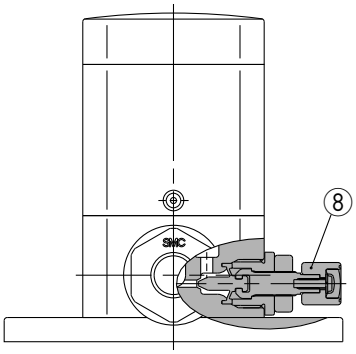

Parts list

No.	Description	Material
1	**Actuator section**	PPS
2	**Body**	PFA
3	**Diaphragm**	PTFE
4	**End plate**	PPS
5	**Insert bushing**	PFA
6	**Nut**	PFA
7	**Collar**	PFA
8	**Flow rate adjuster section**	PPS

LVC
LVA
LVH
LVD
LVQ
LQ1
LVN
TL/TIL
LQ3

Dimensions

Basic type

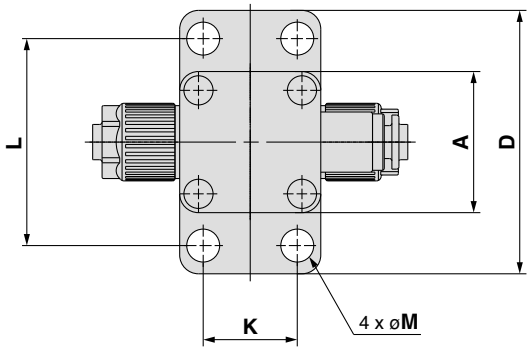

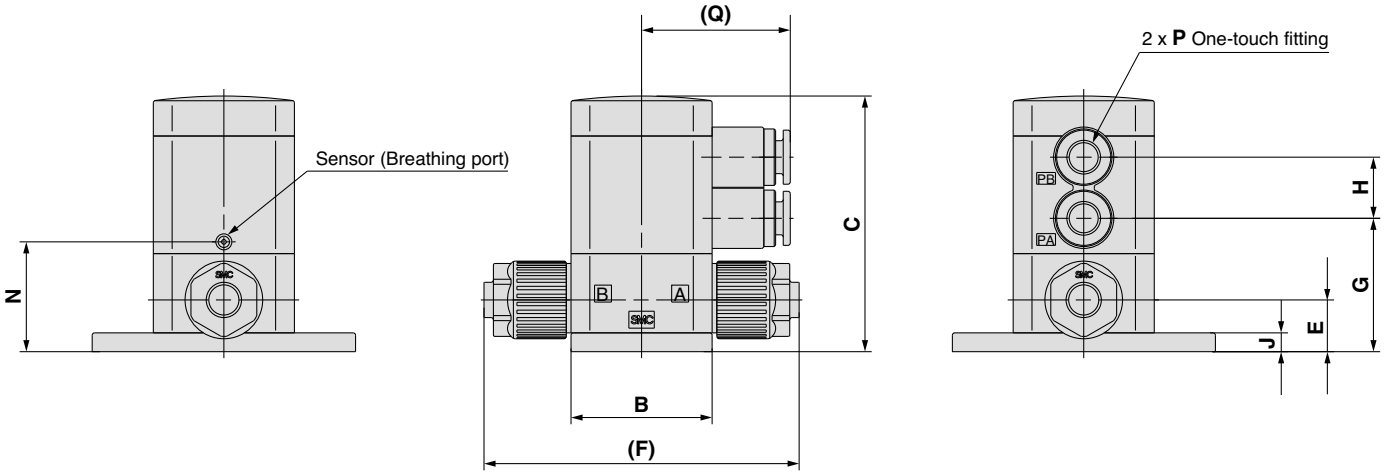

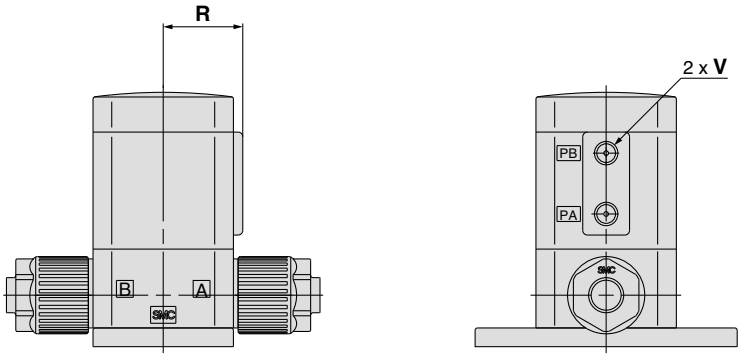

Pilot port threaded type

Dimensions

(mm)

Model	A	B	C	D	E	F	G	H	J	K	L	M	N	P	Q	R	V
LVD1□-S□	20	20	45	39	9.5	46	23	11.5	4.5	11	30	5	21	ø4 (5/32")	28	22.5	M5 x 0.8
LVD2□-S□	30	30	54.4	56	11	67	28.5	13	4	20	44	7	23	ø6	31.5	17	M5 x 0.8
LVD3□-S□	35	35	79.5	62	17.5	83	45.5	14.5	6	22	50	7	37	ø6	36	21	M5 x 0.8
LVD4□-S□	35	35	82	62	20	93	48	14.5	6	22	50	7	39	ø6	36	21	M5 x 0.8
LVD5□-S□	45	45	105.5	76	25	114	65	17.5	8	32	64	7	52	ø6	38.5	25	M5 x 0.8

With flow rate adjustment

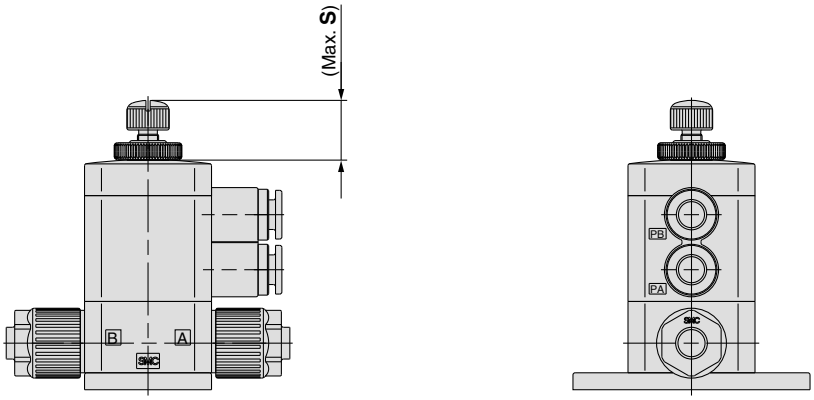

Dimensions (mm)

Model	S
LVD1□-S□	14
LVD2□-S□	12.5
LVD3□-S□	26
LVD4□-S□	26
LVD5□-S□	29.5

With bypass

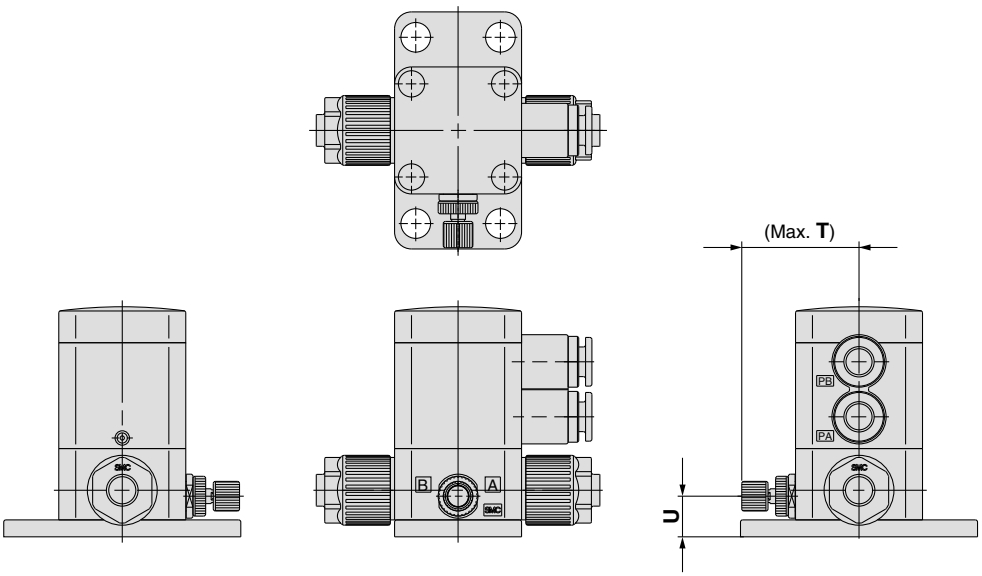

Dimensions (mm)

Model	T	U
LVD2□-S□	28	9.6
LVD3□-S□	34	17.5
LVD4□-S□	35	20
LVD5□-S□	57	25

With flow rate adjustment & bypass

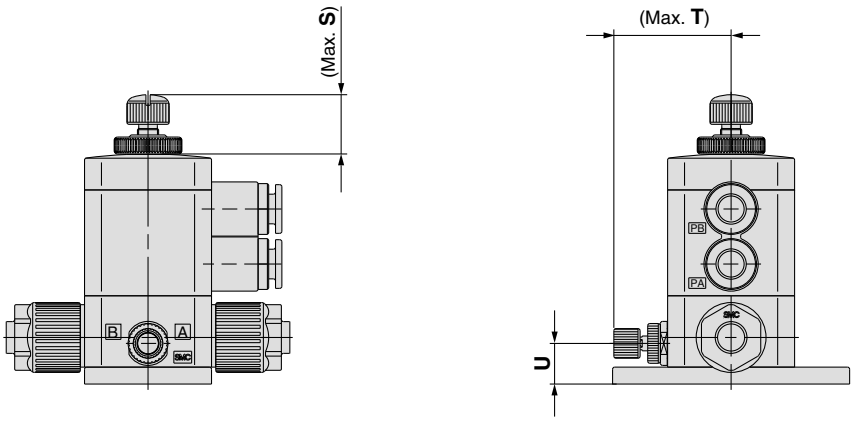

Dimensions (mm)

Model	S	T	U
LVD2□-S□	12.5	28	9.6
LVD3□-S□	26	34	17.5
LVD4□-S□	26	35	20
LVD5□-S□	29.5	57	25

Dimensions

Suck Back Valve Unit

Pilot port One-touch fittings type

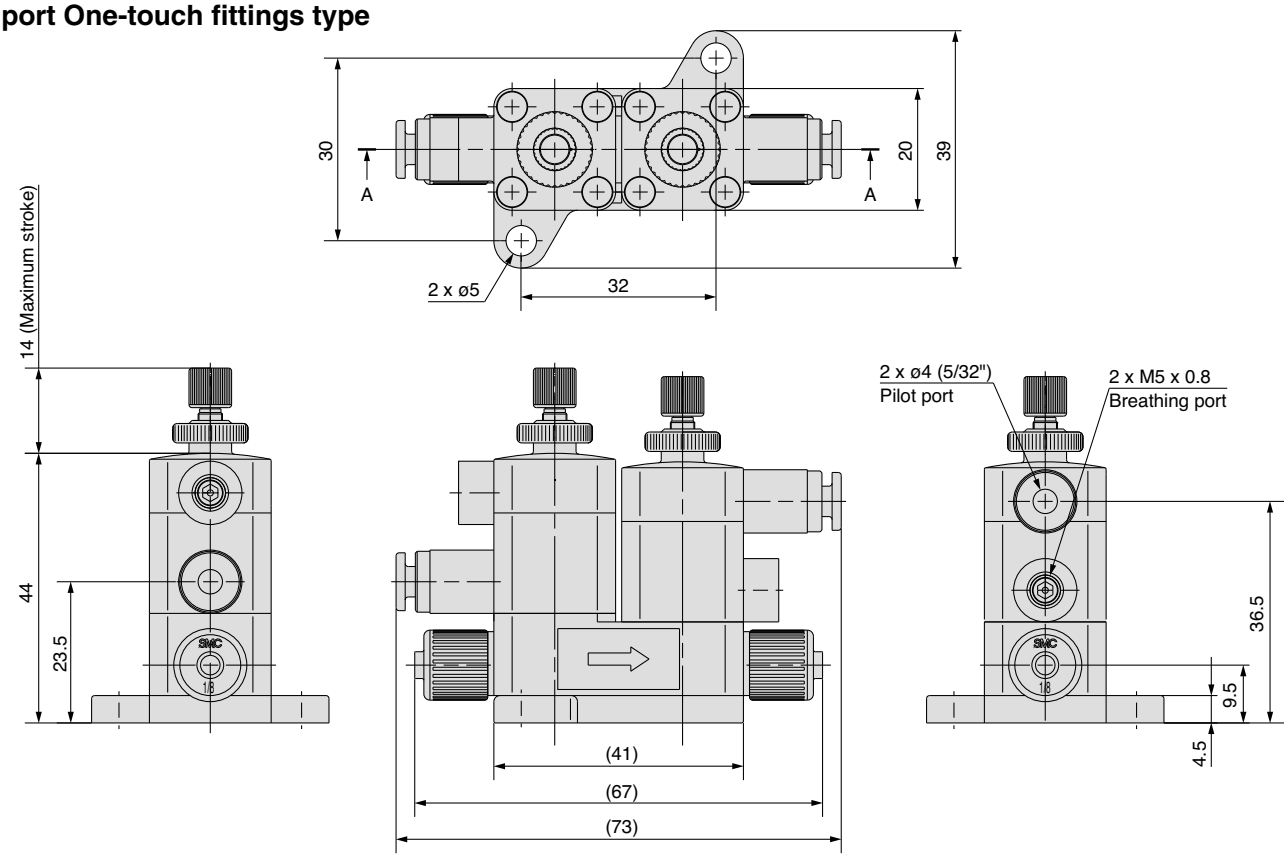

Pilot port threaded type

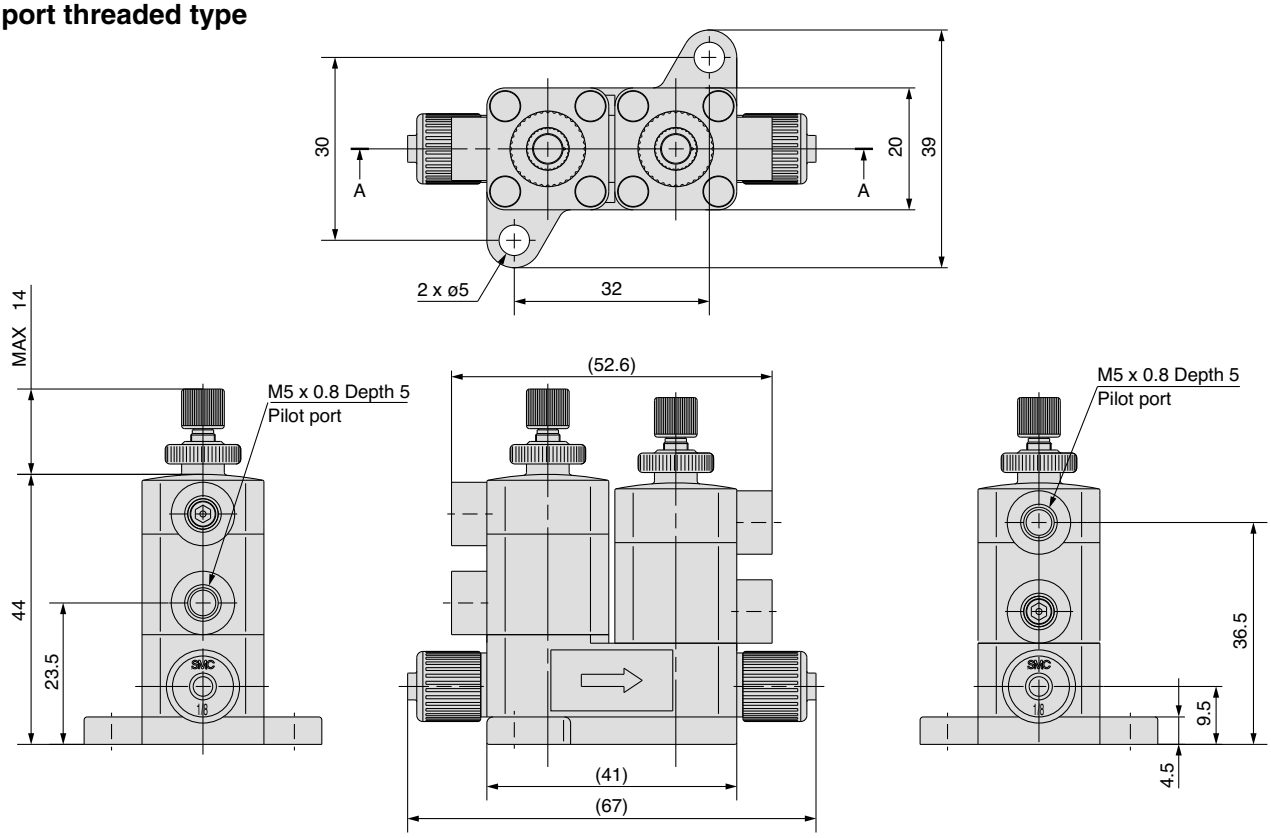

Tube Extensions
Series LVD

How to Order

LVD 2 0 – T 06 ☐ – ☐ ☐

Body class

Symbol	Body class	Orifice dia.
2	2	ø4
3	3	ø8
4	4	ø10
5	5	ø16

Valve type

0	N.C
1	N.O
2	Double acting

Note) Refer to "Variations" in the table below for valve type combinations.

Option

Nil	None
1	With flow rate adjustment

Note) Refer to "Variations" in the table below for option combinations.

Material

Symbol	Body	Actuator section / End plate	Diaphragm	Note
Nil	PFA	PPS	PTFE	—
N	PFA	PPS	PTFE	Ammonium hydroxide compatible

Pilot port thread type

Symbol	Body class
Nil	ø6 One-touch fitting
2	M5 x 0.8

Tubing O.D.

Symbol	Tubing O.D.	Body class 2	3	4	5
Metric sizes					
06	ø6	○			
10	ø10		○		
12	ø12			○	
19	ø19				○
Inch sizes					
07	1/4	○			
11	3/8		○		
13	1/2			○	
19	3/4				○

Variations

Type	Symbol	Valve type \ Model	LVD20-T	LVD30-T	LVD40-T	LVD50-T
		Orifice diameter	ø4	ø8	ø10	ø16
		Tubing O.D. Metric	6	10	12	19
		Tubing O.D. Inch	1/4	3/8	1/2	3/4
Basic type 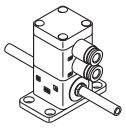	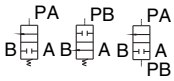 N.C. N.O. Double acting	N.C.	○	○	○	○
		N.O.	○	○	○	○
		Double acting	○	○	○	○
With flow rate adjust-ment 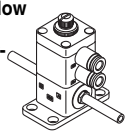	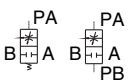 N.C. Double acting	N.C.	○	○	○	○
		Double acting	○	○	○	○

Standard Specifications

Model		LVD20	LVD30	LVD40	LVD50
Tubing O.D.	Metric	6	10	12	19
	Inch	1/4	3/8	1/2	3/4
Orifice diameter		ø4	ø8	ø10	ø16
Flow characteristics	Av x 10^{-6}m²	8.4	31.2	45.6	120
	Cv	0.35	1.3	1.9	5
Withstand pressure (MPa)		1			
Operating pressure (MPa) <A→B flow>		0 to 0.5	0 to 0.3		
Back pressure (MPa)		0.3 or less	0.2 or less		
Valve leakage (cm³/min)		0 (with water pressure)			
Pilot air pressure (MPa)		0.3 to 0.5			
Pilot port size	One-touch fitting	ø6 x ø4 tube			
	Threaded	M5 x 0.8			
Fluid temperature (°C)		0 to 100			
Ambient temperature (°C)		0 to 60			
Mass (kg)		0.09	0.15	0.17	0.36

LVC
LVA
LVH
LVD
LVQ
LQ1
LVN
TL/TIL
LQ3

⚠ Specific Product Precautions

Be sure to read before handling. Refer to front matters 42 and 43 for Safety Instructions, and pages 507 to 509 for High Purity Chemical Air Operated Valve/Compact Type Precautions.

Construction

Standard type
N.C. type

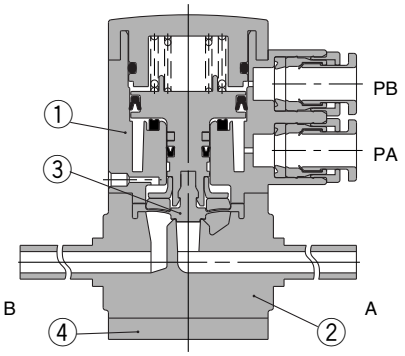

N.O. type

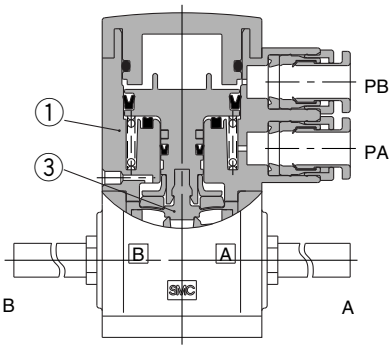

Double acting type

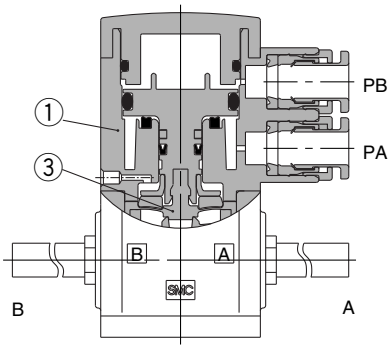

With flow rate adjustment

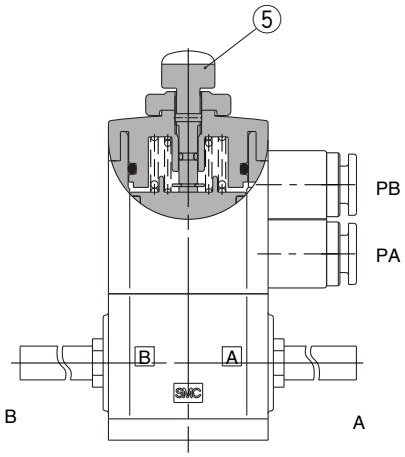

Parts list

No.	Description	Material
1	Actuator section	PPS
2	Body	PFA
3	Diaphragm	PTFE
4	End plate	PPS
5	Flow rate adjuster section	PPS

Dimensions

Basic type

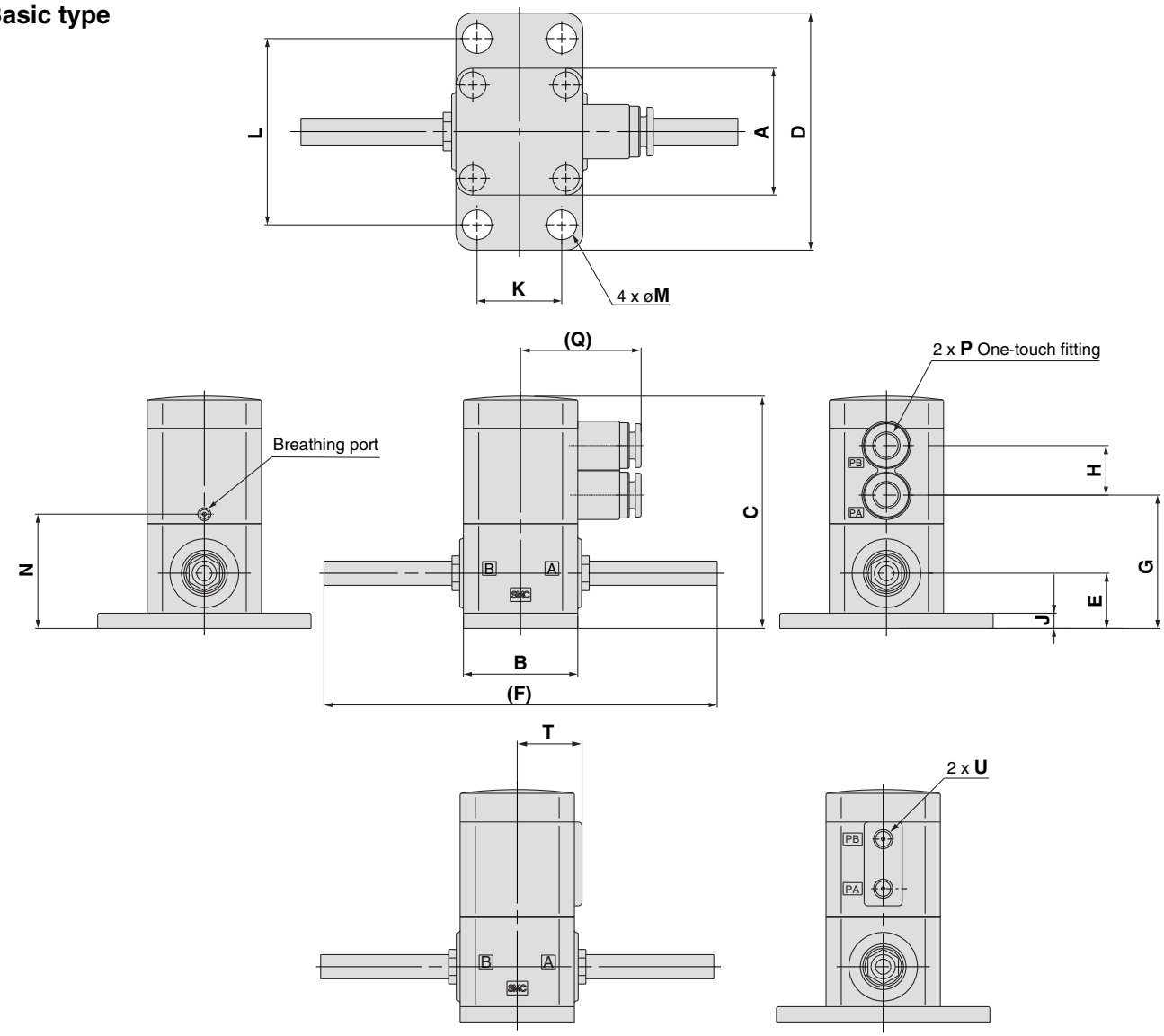

Pilot port threaded type

With flow rate adjustment

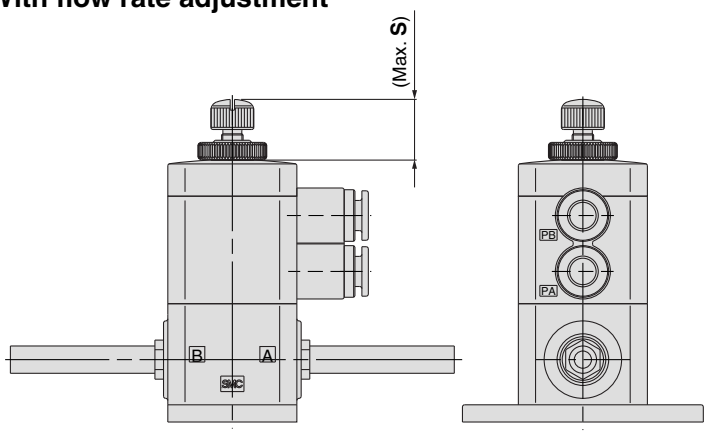

Dimensions (mm)

Model	S
LVD2□-T□	12.5
LVD3□-T□	26
LVD4□-T□	26
LVD5□-T□	29.5

Dimensions (mm)

Model	A	B	C	D	E	F	G	H	J	K	L	M	N	P	Q	T	U
LVD2□-T□	30	30	61	56	14.5	104	35	13	4	20	44	7	30	ø6	31.5	17	M5 x 0.8
LVD3□-T□	35	35	79.5	62	17.5	136	42.5	17.5	6	22	50	7	37	ø6	36	21	M5 x 0.8
LVD4□-T□	35	35	82	62	20	137	45	17.5	6	22	50	7	39	ø6	36	21	M5 x 0.8
LVD5□-T□	45	45	105.5	76	25	169.5	65	17.5	8	32	64	7	52	ø6	38.5	25	M5 x 0.8

Fittings and Special Tools

Fittings

Changing tubing sizes

The tubing size can be changed within the same body class (body size) by replacing the nut and insert bushing.

Body class	Tubing O.D.												
	Metric sizes							Inch sizes					
	3	4	6	8	10	12	19	1/8	3/16	1/4	3/8	1/2	3/4
1	○	○	—	—	—	—	—	○	—	—	—	—	—
2	●	●	○	—	—	—	—	●	●	○	—	—	—
3	—	—	●	●	○	—	—	—	—	●	○	—	—
4	—	—	—	—	●	○	—	—	—	—	●	○	—
5	—	—	—	—	—	●	○	—	—	—	—	●	○

Part composition

	Component parts		
	Nut	Insert	Collar (Insert assembly)
○ Basic size	Yes	Yes	No
● Reducer type	Yes	Yes	Yes

⚠ Caution

1. **Connect tubing with special tools.**
   Refer to the pamphlet "High-Purity Fluoro-polymer Fittings HYPER FITTING®/Series LQ1, 2 Work Procedure Instructions" (M-E05-1) for connecting tubing and special tools. (Downloadable from our web site.)

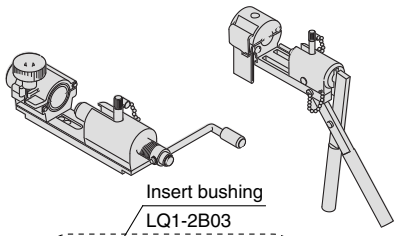

Changing the tubing size

Example) Changing the tubing from an outside diameter of 1/4" to 1/8" in body class 2.

Prepare an insert bushing and nut for 1/8" O.D. tubing (LQ1-2U03) and change the tubing size. (Refer to the section on how to order fitting parts.)

Note) Tubing is sold separately.

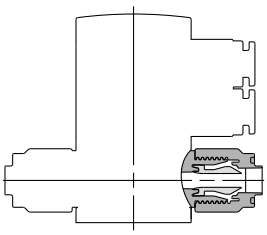

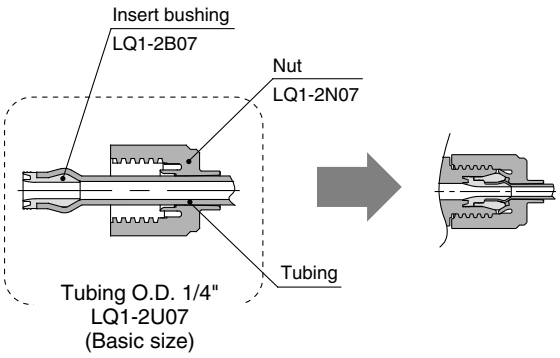

How to order fitting parts

LQ1 – 1 U 03

∗ Type U is recommended when changing tubing sizes.

Body class

Symbol	Body class
1	1
2	2
3	3
4	4
5	5

Type of part

Symbol	Type of part
U	Nut & Insert bushing
B	Insert bushing
N	Nut

Tubing size

Symbol	Tubing O.D.	Body class
03	1/8", ø3	1
04	ø4	
03	1/8"	2
04	ø4	
05	3/16"	
06	ø6	
07	1/4"	
06	ø6	3
08	ø8	
10	ø10	
07	1/4"	
11	3/8"	
10	ø10	4
12	ø12	
11	3/8"	
13	1/2"	
12	ø12	5
13	1/2"	
19	3/4", ø19	

Applicable Fluids

Material and fluid compatibility check list for High Purity Chemical Valves

Chemical	Compatibility
Acetone	○ Note 1, 2)
Ammonium hydroxide	○ Note 2)
Isobutyl alcohol	○ Note 1, 2)
Isopropyl alcohol	○ Note 1, 2)
Hydrochloric acid	○
Ozone (dry)	○
Hydrogen peroxide Concentration 5% or less, 50°C or less	○
Ethyl acetate	○ Note 1, 2)
Butyl acetate	○ Note 1, 2)
Nitric acid (except fuming nitric acid) Concentration 10% or less	○ Note 2)
DI water	○
Sodium hydroxide Concentration 50% or less	○
Nitrogen gas	○
Super pure water	○
Toluene	○ Note 1, 2)
Hydrofluoric acid	×
Sulfuric acid (except fuming sulfuric acid)	○ Note 2)
Phosphoric acid Concentration 80% or less	○

Table symbols
○: Can be used
: Can be used in certain conditions
×: Cannot be used

The material and fluid compatibility check list provides reference values as a guide only.
Note 1) Since static electricity may be generated, implement suitable countermeasures.
Note 2) Use caution as permeation may occur. The permeated fluid may effect the parts of other materials.

- Compatibility is indicated for fluid temperatures of 100°C or less.
- The material and fluid compatibility check list provides reference values as a guide only, therefore we do not guarantee the application to our product.
- The data above is based on the information presented by the material manufacturers.
- SMC is not responsible for its accuracy and any damage happened because of this data.

Precautions 1

Be sure to read before handling.

Design & Selection

⚠ Warning

1. Confirm the specifications.

Give careful consideration to operating conditions such as the application, fluid and environment, and use within the operating ranges specified in this catalog.

2. Fluids

Operate after confirming the compatibility of the product's component materials with fluids, using the check list on page 506. Contact SMC regarding fluids other than those in the check list.

Operate within the indicated fluid temperature range.

3. Maintenance space

Ensure the necessary space for maintenance and inspections.

4. Fluid pressure range

Keep the supplied fluid pressure within the operating pressure range shown in the catalog.

5. Ambient environment

Operate within the ambient operating temperature range. After confirming the compatibility of the product's component materials with the ambient environment, operate so that fluid does not adhere to the product's exterior surfaces.

6. Liquid seals

When circulating fluid

Provide a relief valve in the system so that fluid does not get into the liquid seal circuit.

7. Countermeasures for static electricity

Since static electricity may be generated depending on the fluid being used, implement suitable countermeasures.

Mounting

⚠ Warning

1. If air leakage increases or equipment does not operate properly, stop operation.

After mounting, perform suitable function and leak tests to confirm that the mounting is correct.

2. Instruction manual

Mount and operate the product after reading the manual carefully and understanding its contents. Also keep the manual where it can be referred to as necessary.

Piping

⚠ Caution

1. Preparation before piping

Before piping is connected, it should be thoroughly blown out with air (flushing) or washed to remove chips, cutting oil and other debris from inside the pipe.

Install piping so that it does not apply pulling, pressing, bending or other forces on the valve body.

2. Use the tightening torques shown below for the threaded pilot port.

Operating port tightening torque

Operating port	Torque (N·m)
M5	1/6 turn with a tightening tool after first tightening by hand

3. Use pilot ports and sensor (breathing) ports as indicated below.

	PA Port	PB Port	Sensor (breathing) port
N.C.	Pressure	Breathing	Breathing
N.O.	Breathing	Pressure	Breathing
Double acting	Pressure	Pressure	Breathing

In the case of N.C. and N.O. types, the port which does not receive operating pressure is released to atmosphere. When intake and exhaust directly from the valve is not desired due to problems with the ambient environment or scattering of dust, etc., install piping and perform intake and exhaust at a location which does not present a problem.

4. Connect tubing with special tools.

Refer to the pamphlet “High-Purity Fluoropolymer Fittings HYPER FITTING®/Series LQ1, 2 Work Procedure Instructions” (M-E05-1) for connecting tubing and special tools. (Downloadable from our web site.)

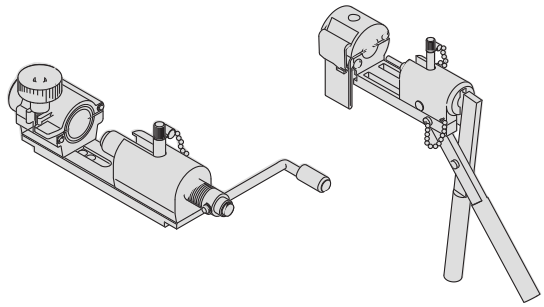

Operating Air Supply

⚠ Warning

1. Use clean air.

Do not use compressed air which includes chemicals, synthetic oils containing organic solvents, salt, or corrosive gases, etc., as this may cause damage or malfunction.

Precautions 2

Be sure to read before handling.

Installation and Removal of Tubing for Pilot Port Section

⚠ Caution

1. Installation of tubing

1) Using tube cutters TK-1, 2 or 3, take a tube having no flaws on its periphery and cut it off at a right angle. Do not use pinchers, nippers or scissors, etc. The tubing might be cut diagonally or flattened, making installation impossible or causing problems such as disconnection and leakage.
2) Hold the tube and push it in slowly, inserting it securely all the way into the fitting.
3) After inserting the tubing, pull on it tightly to confirm that it will not come out. If it is not installed securely all the way into the fitting, problems such as leakage or disconnection of the tubing can occur.
4) Grease is not used due to the series KP oil-free specifications. For this reason, greater insertion force is required when tubing is installed. In particular, polyurethane tubing may fold when inserted due to its softness. Hold the end of the tubing, and insert it all the way in slowly and securely. Refer to dimension "M" in the dimension drawings for guidance on the insertion depth of tubing.

2. Removal of tubing

1) Push in the release button sufficiently, pressing the collar evenly around its circumference.
2) Pull out the tubing while holding down the release button so that it does not pop out. If the release button is not pressed down sufficiently, there will be increased bite on the tubing and it will become more difficult to pull it out.
3) When the removed tubing is to be used again, first cut off the section of the tubing which has been chewed.
Using the chewed portion of the tube as it is can cause problems such as leakage or difficulty in removing the tubing.

Precautions on Use of Other Tubing Brands

⚠ Caution

1. When using tubing brands other than SMC, confirm that the tubing outside diameter tolerances satisfy the following specifications.

1) Polyolefin tubing	±0.1 mm
2) Polyurethane tubing	+0.15 mm –0.2 mm
3) Nylon tubing	±0.1 mm
4) Soft nylon tubing	±0.1 mm

Do not use tubing if the outside diameter tolerance is not satisfied. It may not be possible to connect the tubing, or leakage or disconnection may occur after connection.
Polyolefin tubing is recommended for use with clean room fittings. Note that while other types of tubing will satisfy performance standards for leakage and tubing pull-out strength, etc., the degree of cleanliness will deteriorate.

Operating Environment

⚠ Warning

1. Do not use in a location having an explosive atmosphere.
2. Do not operate in locations where vibration or impact occurs.
3. Do not use in locations where radiated heat will be received from nearby heat sources.

Maintenance

⚠ Warning

1. Maintenance should be performed in accordance with the procedures in the instruction manual.
Incorrect handling can cause damage or malfunction of machinery and equipment, etc.
2. Before removing equipment or compressed air supply/exhaust devices, shut off the air and power supplies, and exhaust compressed air from the system.
Further, when restarting equipment after remounting or replacement, first confirm safety and then check the equipment for normal operation.
3. Perform work after removing residual chemicals and carefully replacing them with DI water or air, etc.
4. Do not disassemble the product. Products which have been disassembled cannot be guaranteed.
If disassembly is necessary, contact SMC.
5. In order to obtain optimum performance from valves, perform periodic inspections to confirm that there are no leaks from valves or fittings, etc.

⚠ Caution

1. Removal of drainage
Flush drainage from filters regularly.

Precautions 3

Be sure to read before handling.

Precautions on Usage

⚠ Warning

1. **Operate within the ranges of the maximum operating pressure and back pressure.**

⚠ Caution

1. **Please note that when the product is shipped from the factory, gases such as N_2 and air may leak from the valve at a rate of 1 cm^3/min (when pressurized).**
2. **When operated at a very low flow rate, the series LVD with flow rate adjustment may vibrate, etc. depending on the operating conditions. Therefore, operate it after careful examination of the flow rate, pressure and piping conditions.**
3. **In the series LVD, water hammering may occur depending on the fluid pressure conditions. In most cases, improvement is possible by adjusting the pilot pressure with a speed controller, etc., but the flow rate, pressure and piping conditions should be reviewed.**
4. **To adjust the flow rate for the series LVD with flow rate adjustment, open gradually starting from the fully closed condition.**
   Opening is accomplished by turning the adjustment knob counter clockwise.
   Additionally, do not apply any unreasonable force to the adjustment knob when nearing a fully opened or closed state. This may result in deformation of the orifice sheet surface or damage to the threaded part of the adjustment knob.
   It is in the fully closed condition when the product is shipped from the factory.
5. **After a long period of nonuse, perform a test run before beginning regular operation.**
6. **Since the LVD is packaged in a clean room use sufficient care in handling when opened.**
7. **In the case of the integral tubing type, be certain that the fittings are not applicable by heating up the tubing with a heat gun, for example.**