2/3 Port Mechanical Valve

Series VM200

RoHS

- **Large flow capacity**
- **Possible to choose mounting method: Side mounting, bottom mounting using screws, or mounting with special bracket**
- **A variety of actuator types**

Specifications

Fluid		Air/Inert gas	
Operating pressure range		0 to 1 MPa	
Ambient and fluid temperature		−5 to 60°C (No freezing)	
Flow-rate characteristics		1 (P) ⇒ 2 (A)	2 (A) ⇒ 3 (R)
	C [dm³/(s·bar)]	4	3.5
	b	0.4	0.1
	Cv	0.87	0.69
Lubrication Note 1)		Not required	
Port size		1/4	
Weight (Basic)		90 g	
Bracket part number Note 2)		VM2-B	

Note 1) Use turbine oil Class 1 ISO VG32, if lubricated.
Note 2) The bracket can only be used for side mounting.

Model

	Piping direction		Side ported				Actuator	
	Body option		Standard		With bottom mounting thread		Actuator part number	Additional weight for actuator
	Number of ports		**2 port**	**3 port**	**2 port**	**3 port**		
Mechanical operation	Basic		VM220-02-00A	VM230-02-00A	VM220U-02-00A	VM230U-02-00A	—	—
	Roller lever	Polyacetal roller	VM220-02-01A	VM230-02-01A	VM220U-02-01A	VM230U-02-01A	VM-01A	50 g
		Hard steel roller	VM220-02-01SA	VM230-02-01SA	VM220U-02-01SA	VM230U-02-01SA	VM-01AS	60 g
	One way roller lever	Polyacetal roller	VM220-02-02A	VM230-02-02A	VM220U-02-02A	VM230U-02-02A	VM-02A	60 g
		Hard steel roller	VM220-02-02SA	VM230-02-02SA	VM220U-02-02SA	VM230U-02-02SA	VM-02AS	70 g
	Straight plunger		VM220-02-05A	VM230-02-05A	VM220U-02-05A	VM230U-02-05A	VM-05A	130 g
	Roller plunger	Polyacetal roller	VM220-02-06A	VM230-02-06A	VM220U-02-06A	VM230U-02-06A	VM-06A	120 g
		Hard steel roller	VM220-02-06SA	VM230-02-06SA	VM220U-02-06SA	VM230U-02-06SA	VM-06AS	130 g
	Cross roller plunger	Polyacetal roller	VM220-02-07A	VM230-02-07A	VM220U-02-07A	VM230U-02-07A	VM-07A	120 g
		Hard steel roller	VM220-02-07SA	VM230-02-07SA	VM220U-02-07SA	VM230U-02-07SA	VM-07AS	130 g
Manual operation	Toggle lever		VM220-02-08A	VM230-02-08A	VM220U-02-08A	VM230U-02-08A	VM-08A	110 g
	Push button (Mushroom)	Red	VM220-02-30RA	VM230-02-30RA	VM220U-02-30RA	VM230U-02-30RA	VM-30AR	58 g
		Black	VM220-02-30BA	VM230-02-30BA	VM220U-02-30BA	VM230U-02-30BA	VM-30AB	
		Green	VM220-02-30GA	VM230-02-30GA	VM220U-02-30GA	VM230U-02-30GA	VM-30AG	
		Yellow	VM220-02-30YA	VM230-02-30YA	VM220U-02-30YA	VM230U-02-30YA	VM-30AY	
	Push button (Extended)	Red	VM220-02-32RA	VM230-02-32RA	VM220U-02-32RA	VM230U-02-32RA	VM-32AR	52 g
		Black	VM220-02-32BA	VM230-02-32BA	VM220U-02-32BA	VM230U-02-32BA	VM-32AB	
		Green	VM220-02-32GA	VM230-02-32GA	VM220U-02-32GA	VM230U-02-32GA	VM-32AG	
		Yellow	VM220-02-32YA	VM230-02-32YA	VM220U-02-32YA	VM230U-02-32YA	VM-32AY	
	Push button (Flush)	With a set of red, black, green, yellow	VM220-02-33A	VM230-02-33A	VM220U-02-33A	VM230U-02-33A	VM-33A	50 g
	Twist selector (2 position)	Red	VM220-02-34RA	VM230-02-34RA	VM220U-02-34RA	VM230U-02-34RA	VM-34AR	56 g
		Black	VM220-02-34BA	VM230-02-34BA	VM220U-02-34BA	VM230U-02-34BA	VM-34AB	
		Green	VM220-02-34GA	VM230-02-34GA	VM220U-02-34GA	VM230U-02-34GA	VM-34AG	
		Yellow	VM220-02-34YA	VM230-02-34YA	VM220U-02-34YA	VM230U-02-34YA	VM-34AY	
	Key selector (2 position)		VM220-02-36A	VM230-02-36A	VM220U-02-36A	VM230U-02-36A	VM-36A	78 g
	Twist selector (3 position)		**3 port**	**5 port**	**3 port**	**5 port**	—	230 g (Add to 2 basic units.)
		Red	VM230-02-35RA	VM250-02-35RA	VM230U-02-35RA	VM250U-02-35RA		
		Black	VM230-02-35BA	VM250-02-35BA	VM230U-02-35BA	VM250U-02-35BA		
		Green	VM230-02-35GA	VM250-02-35GA	VM230U-02-35GA	VM250U-02-35GA		
		Yellow	VM230-02-35YA	VM250-02-35YA	VM230U-02-35YA	VM250U-02-35YA		
	Foot pedal		VM220-02-40A	VM230-02-40A	—	—	—	340 g

Note 1) It is possible to change the actuator assembly and mount to basic type when an actuator part number is specified in the column.
Note 2) For push button (mushroom), push button (flush), push button (extended) and individual fastening ring, refer to page 25.
Note 3) The handle of the selector (2 position and 3 position) cannot be removed or replaced alone.
Note 4) Color of plunger: Gray (2 port), White (3 port)

SMC

How to Order

VM2 3 0 ☐ – 02 – 01 S A – B – ☐

Number of ports

2	2 port
3	3 port
5	5 port (Twist selector 3 position only)

Body option

Nil	Side mounting
U	With bottom mounting thread

Port size

02	R1/4
N02	NPT1/4
F02	G1/4

Actuator type*

00	Basic
01	Roller lever
02	One way roller lever
05	Straight plunger
06	Roller plunger
07	Cross roller plunger
08	Toggle lever
30	Push button (Mushroom)
32	Push button (Extended)
33	Push button (Flush)
34	Twist selector (2 position)
36	Key selector (2 position)
35	Twist selector (3 position)
40	Foot pedal

Suffix for actuator*

S	Hard steel roller	
R	Red	Color of push button, selector
B	Black	
G	Green	
Y	Yellow	

Bracket option

Nil	None
B	With bracket

Note) Applicable only to side mounting type.
However, not applicable to twist selector (3 position) and foot pedal.
Bracket is shipped together, but not assembled.

Made to Order (Pages 21, 22)

X207	Alternate type, Mushroom push button
X219	Push-lock turn-reset type, Mushroom push button

Note) Applicable only to push button (mushroom)

* **Refer to the table on page 13 for combinations of actuator type and suffix.**

Construction

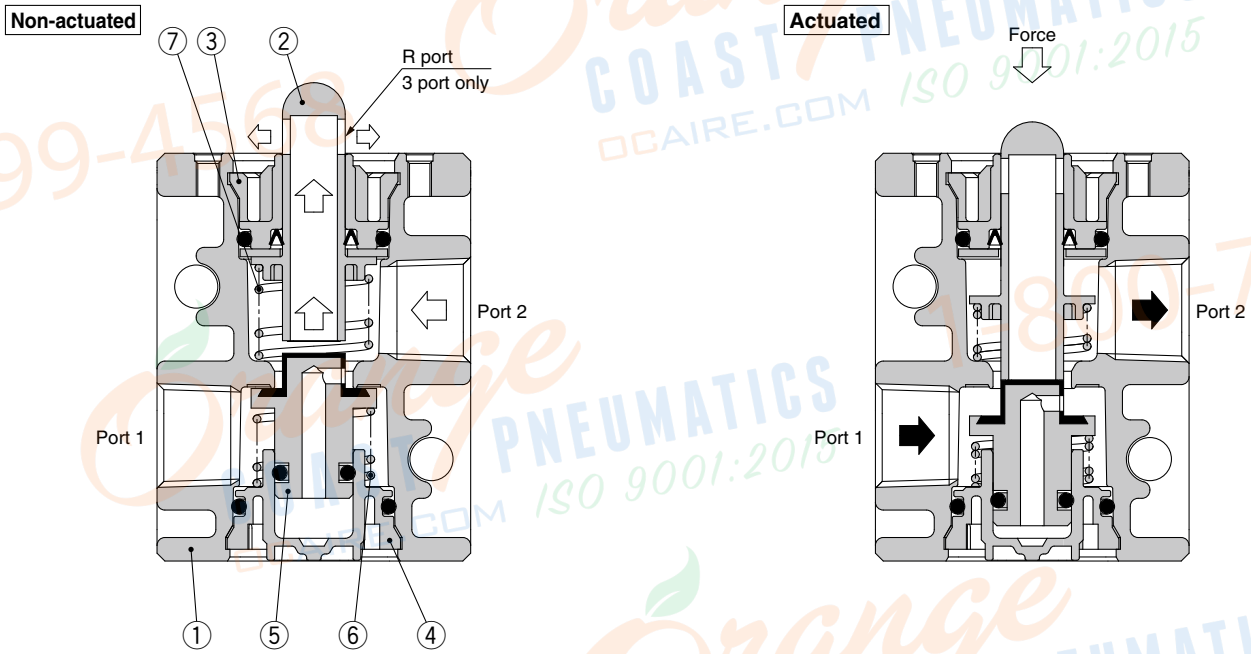

Component Parts

No.	Description	Material	Note	
1	**Valve**	ADC	White coated	
2	**Plunger**	Polyacetal	2 port	Gray
			3 port	White
3	**Plunger retainer**	PBT		
4	**Cover**	PBT		
5	**Inner valve**	NBR, Brass		
6	**Spring**	Stainless steel		
7	**Spring**	Spring steel		

Series VM200

Basic
VM220-02-00A
VM230-02-00A

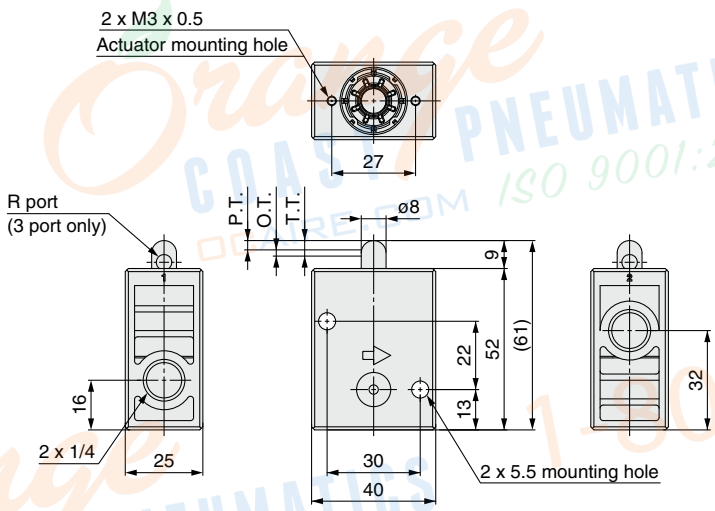

Symbol
2 port

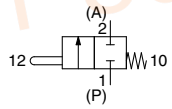

3 port

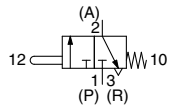

∗ 0.5 MPa supply

F.O.F.∗	52 N
P.T.	3 mm
O.T.	2 mm
T.T.	5 mm

Roller lever
VM220-02-01A
VM230-02-01A
VM220-02-01SA
VM230-02-01SA

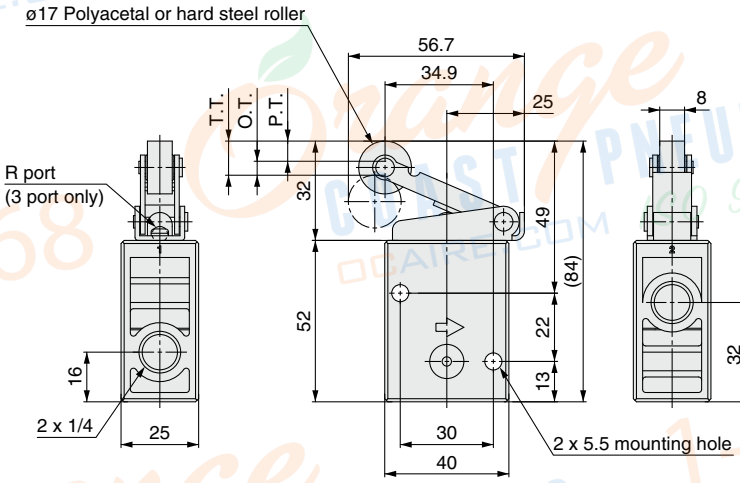

Symbol
2 port

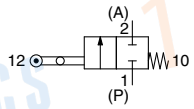

3 port

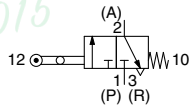

∗ 0.5 MPa supply

F.O.F.∗	24 N
P.T.	6.5 mm
O.T.	4.5 mm
T.T.	11 mm

One way roller lever
VM220-02-02A
VM230-02-02A
VM220-02-02SA
VM230-02-02SA

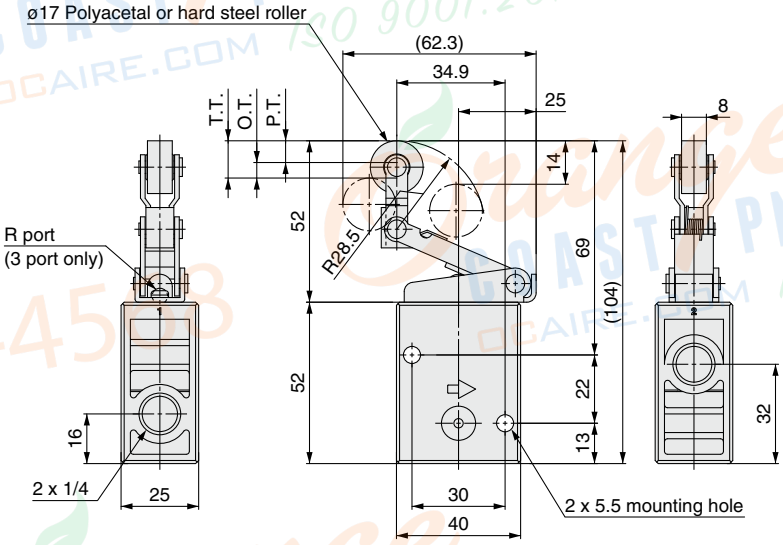

Symbol
2 port

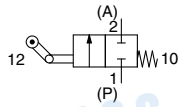

3 port

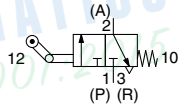

∗ 0.5 MPa supply

F.O.F.∗	22 N
P.T.	7 mm
O.T.	5 mm
T.T.	12 mm

Series VM200

Straight plunger
VM220-02-05A
VM230-02-05A

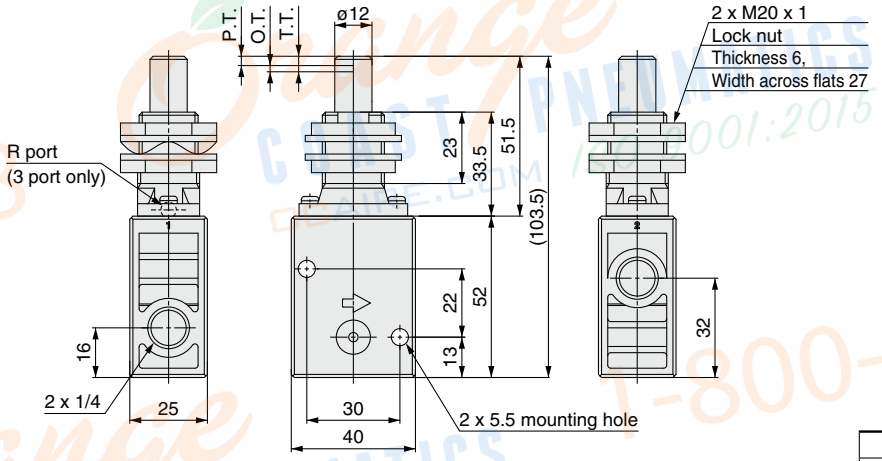

Panel mounting hole

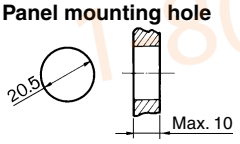

Symbol

2 port

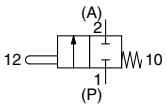

3 port

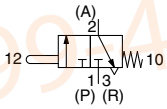

∗ 0.5 MPa supply

F.O.F.∗	56 N
P.T.	3.5 mm
O.T.	2 mm
T.T.	5.5 mm

Roller plunger
VM220-02-06A
VM230-02-06A
VM220-02-06SA
VM230-02-06SA

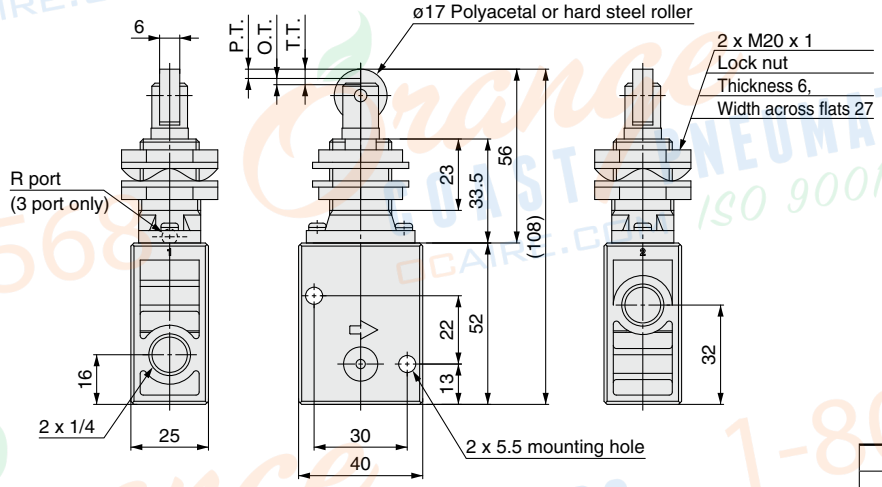

Panel mounting hole

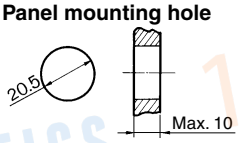

Symbol

2 port

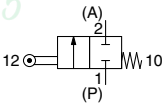

3 port

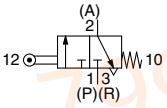

∗ 0.5 MPa supply

F.O.F.∗	56 N
P.T.	3.5 mm
O.T.	2 mm
T.T.	5.5 mm

Cross roller plunger
VM220-02-07A
VM230-02-07A
VM220-02-07SA
VM230-02-07SA

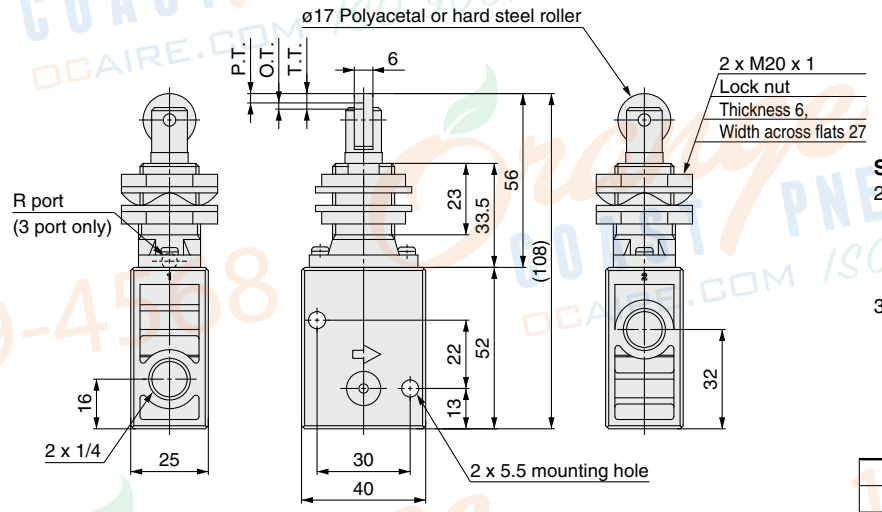

Panel mounting hole

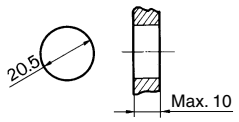

Symbol

2 port

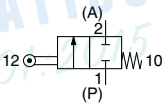

3 port

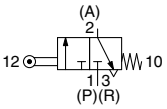

∗ 0.5 MPa supply

F.O.F.∗	56 N
P.T.	3.5 mm
O.T.	2 mm
T.T.	5.5 mm

Series VM200

Toggle lever
VM220-02-08A
VM230-02-08A

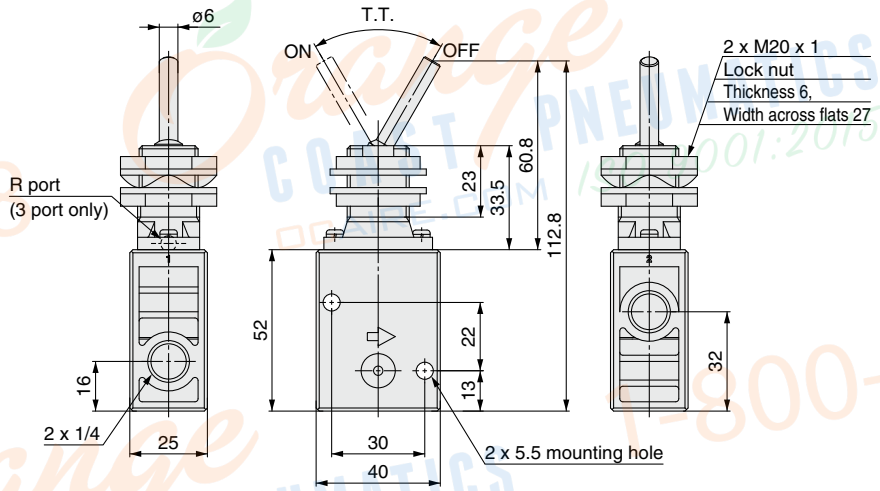

Panel mounting hole

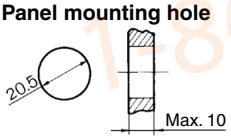

Symbol
2 port

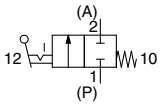

3 port

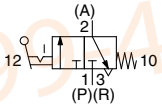

∗ 0.5 MPa supply

F.O.F.*	12 N
T.T.	60°

Push button (Mushroom)
VM220-02-30 (R, B, G, Y) A
VM230-02-30 (R, B, G, Y) A

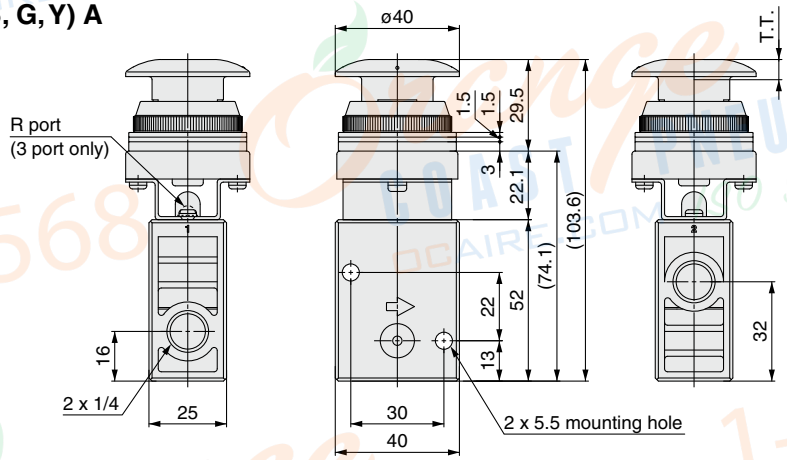

Panel mounting hole

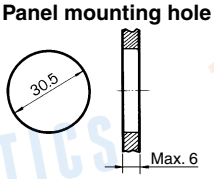

Symbol
2 port

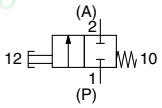

3 port

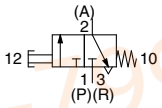

∗ 0.5 MPa supply

F.O.F.*	52 N
T.T.	6.5 mm

Push button (Extended)
VM220-02-32 (R, B, G, Y) A
VM230-02-32 (R, B, G, Y) A

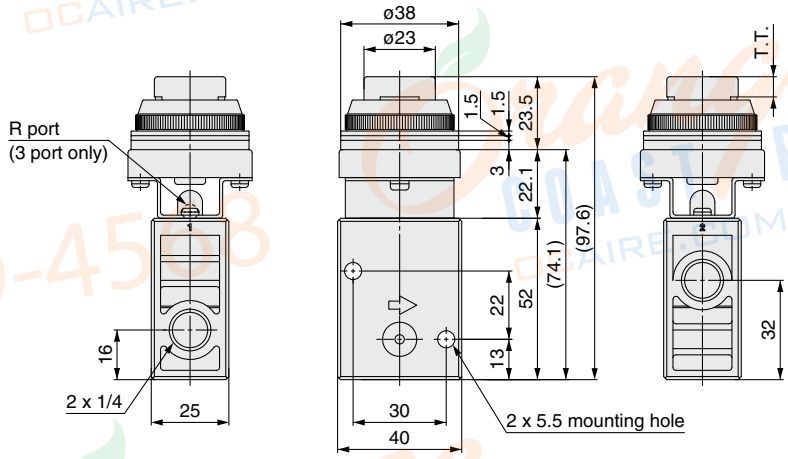

Panel mounting hole

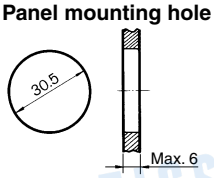

Symbol
2 port

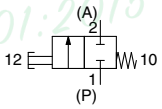

3 port

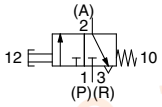

∗ 0.5 MPa supply

F.O.F.*	52 N
T.T.	6.5 mm

Series VM200

Push button (Flush)
VM220-02-33A
VM230-02-33A

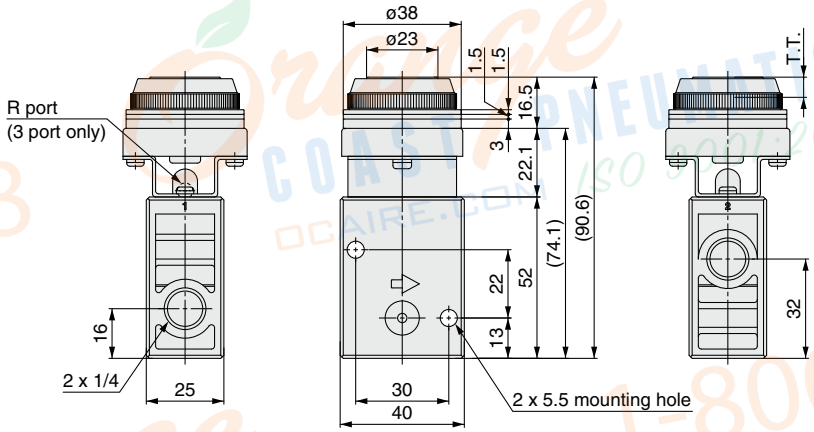

Panel mounting hole

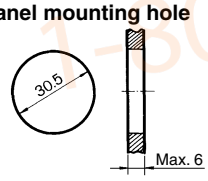

Symbol
2 port

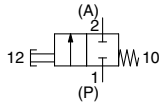

3 port

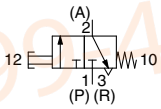

∗ 0.5 MPa supply

F.O.F.*	52 N
T.T.	6.5 mm

Twist selector (2 position)
VM220-02-34 (R, B, G, Y) A
VM230-02-34 (R, B, G, Y) A

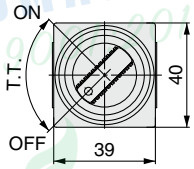

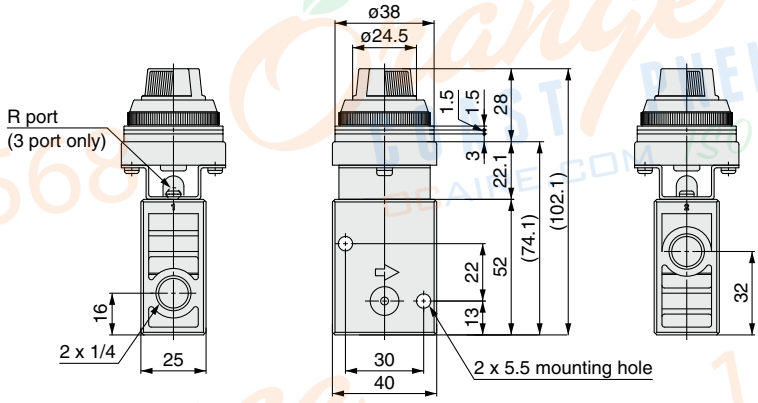

Panel mounting hole

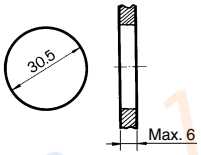

Symbol
2 port

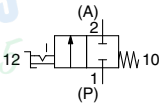

3 port

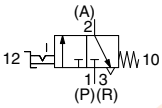

∗ 0.5 MPa supply

F.O.F.*	32 N
T.T.	90°

Key selector (2 position)
VM220-02-36A
VM230-02-36A

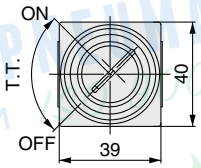

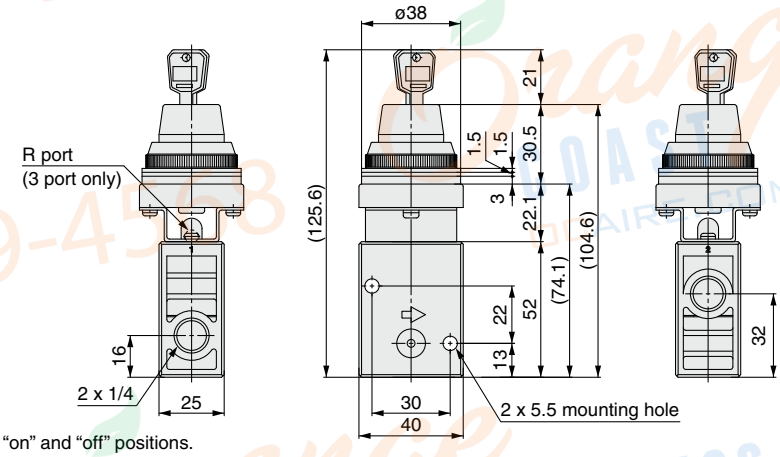

Panel mounting hole

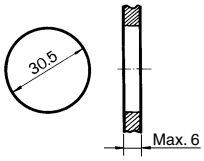

Symbol
2 port

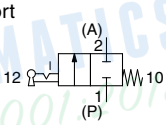

3 port

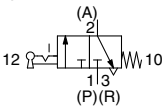

∗ 0.5 MPa supply

F.O.F.*	32 N
T.T.	90°

Key can be removed at the "on" and "off" positions.
One spare key is included.

Series VM200

Twist selector (3 position)
VM230-02-35 (R, B, G, Y) A
VM250-02-35 (R, B, G, Y) A

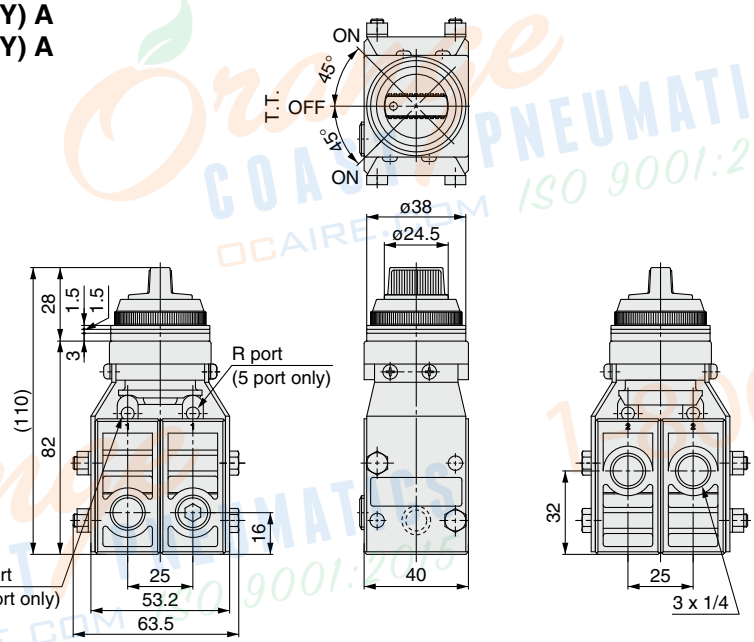

Panel mounting hole

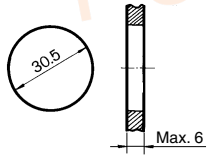

Symbol
3 port

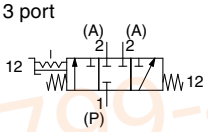

5 port

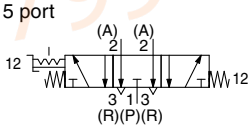

∗ 0.5 MPa supply

F.O.F.*	40 N
T.T.	45°

Foot pedal
VM220-02-40A
VM230-02-40A

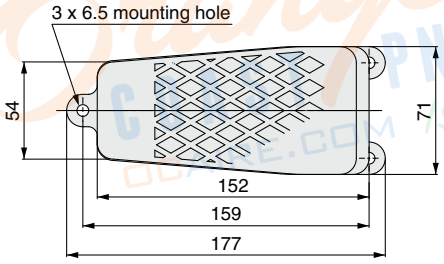

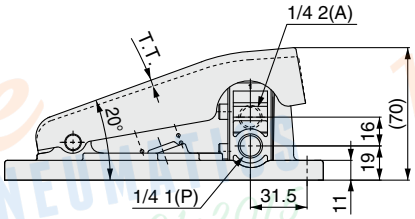

Symbol
2 port

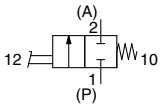

3 port

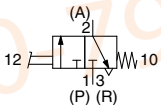

∗ 0.5 MPa supply

F.O.F.*	65 N
T.T.	1.2°

Orange COAST PNEUMATICS ISO 9001:2015 OCAIRE.COM 1-800-799-4568

Series VM200

With bracket
VM220-02-□A-B
VM230-02-□A-B

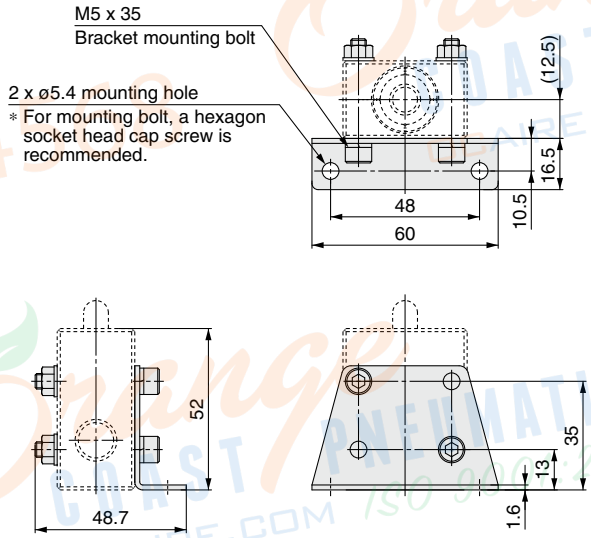

VM2-B

Component parts	Q'ty
Bracket	1
Hexagon socket head cap screw M5 x 35	2
Hexagon nut M5	2

With bottom mounting thread
VM220U-02-□A
VM230U-02-□A

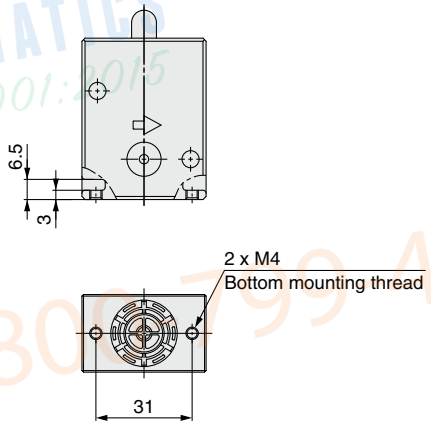

VM230U-02-35□A
VM250U-02-35□A

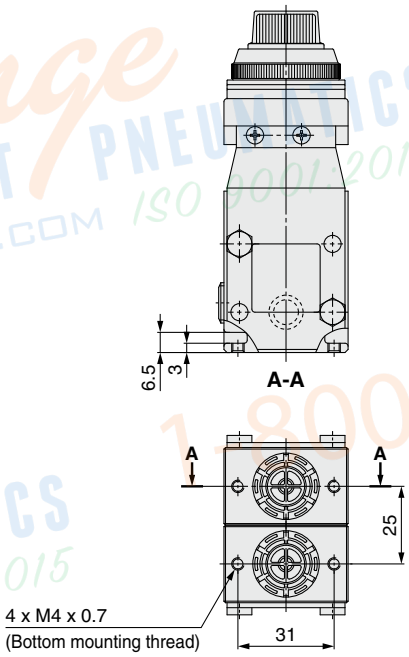

Made to Order

Please contact SMC for detailed specifications, dimensions and delivery.

Made to Order

1 Alternate type, Mushroom push button

Symbol **-X207**

Alternate type: When pressing the push button, the valve actuates and its status is self-retained even after your hand has been released. Pressing the button again will restore the valve to its previous status.

VM120-01-30 (R, B, G, Y) A-X207
VM130-01-30 (R, B, G, Y) A-X207

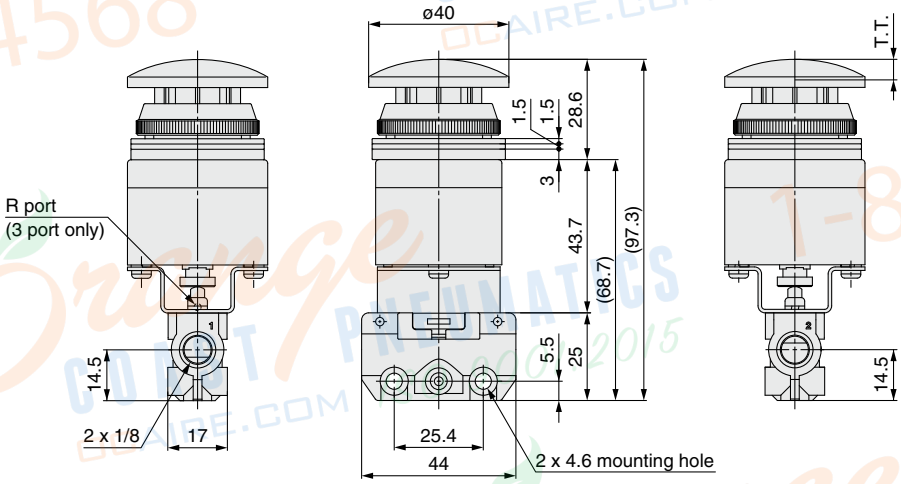

Panel mounting hole

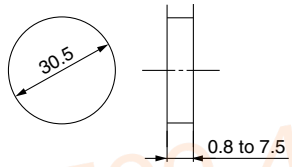

Symbol

2 port

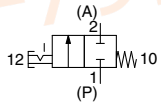

3 port

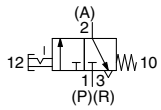

∗ 0.5 MPa supply

F.O.F.*	27 N
T.T.	6.7 mm

VM220-02-30 (R, B, G, Y) A-X207
VM230-02-30 (R, B, G, Y) A-X207

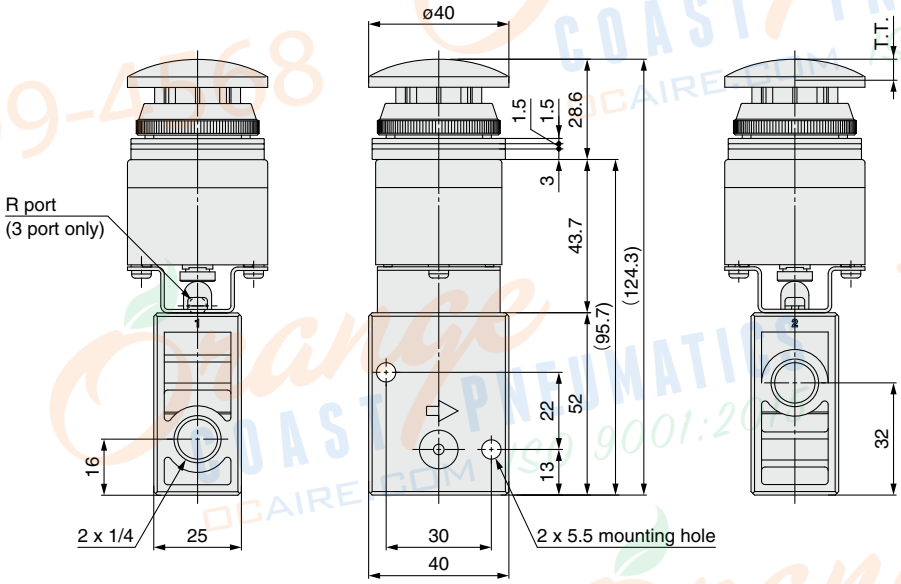

Panel mounting hole

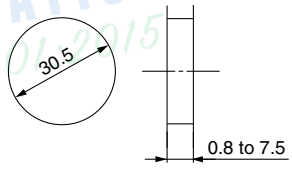

Symbol

2 port

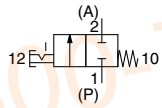

3 port

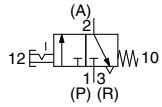

∗ 0.5 MPa supply

F.O.F.*	52 N
T.T.	6.7 mm

SMC

2 Push-lock turn-reset type, Mushroom push button

Symbol **-X219**

Push-lock turn-reset type: When pressing the push button, it is locked in this status. Turning the button clockwise will reset it.

VM120-01-30 (R, B, G, Y) A-X219
VM130-01-30 (R, B, G, Y) A-X219

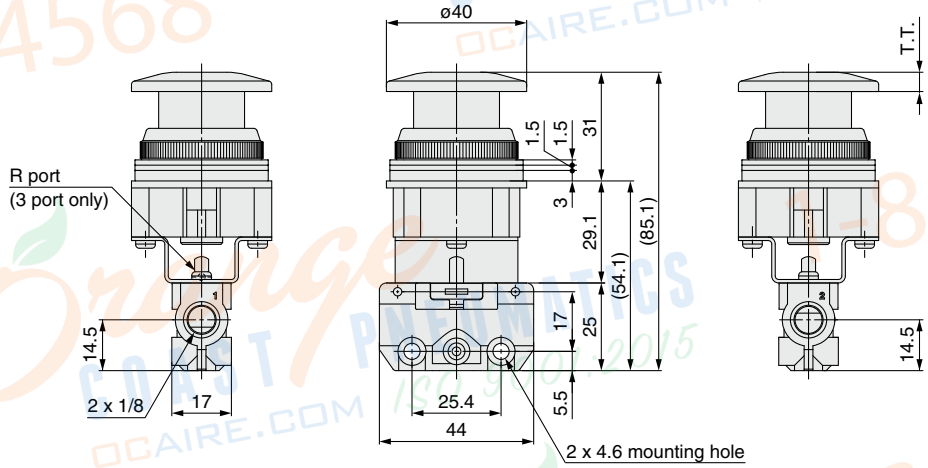

Panel mounting hole

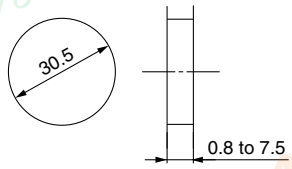

Symbol

2 port

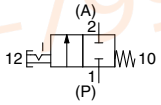

3 port

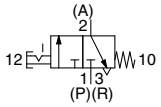

∗ 0.5 MPa supply

F.O.F.*	27 N
T.T.	5.8 mm

VM220-02-30 (R, B, G, Y) A-X219
VM230-02-30 (R, B, G, Y) A-X219

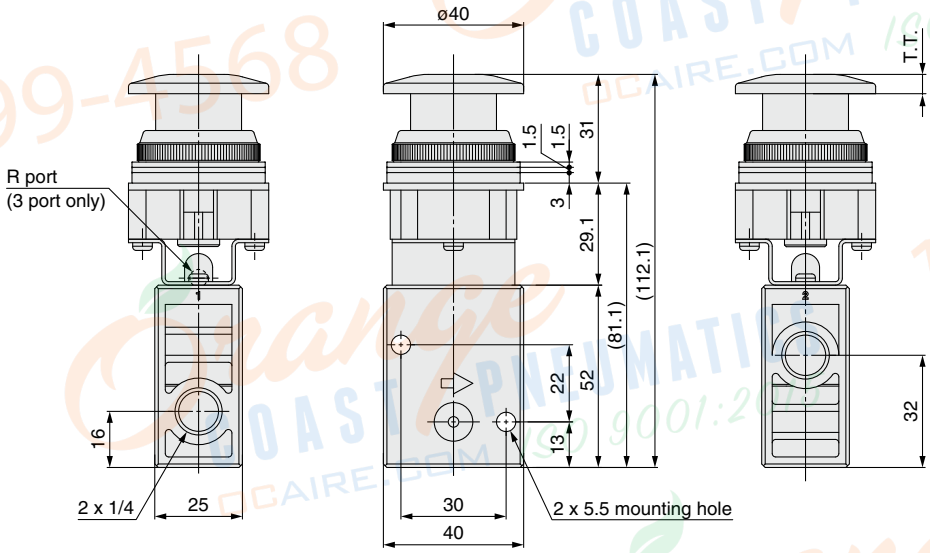

Panel mounting hole

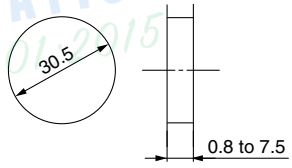

Symbol

2 port

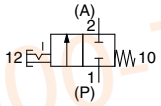

3 port

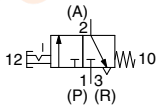

∗ 0.5 MPa supply

F.O.F.*	52 N
T.T.	5.8 mm

Series VM100/200
Specific Product Precautions 1

Be sure to read before handling.
Refer to back cover for Safety Instructions and "Handling Precautions for SMC Products" (M-E03-3) for 3/4/5 Port Solenoid Valve Precautions.

Definition of Symbol

The abbreviations F.O.F. / P.T. / O.T. / T.T. shown in this catalog are detailed below.

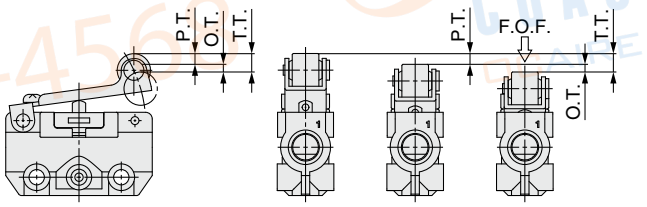

- **F.O.F. <Full Operating Force>**
  Required force to total travel position
- **P.T. <Pre-travel>**
  From free position to initial valve operating position
- **O.T. <Over Travel>**
  From initial valve operating position to total travel position
- **T.T. <Total Travel>**
  From free position to total travel position

Design

⚠ Warning

1. This product cannot be used for applications in which the pressure must be sealed.

Since the VM100 and VM200 are poppet type valves, fluid flows backward when the pressure on port 2 (A) rises.
Since the valves are subject to air leakage, they cannot be used for applications such as holding pressure (including vacuum).

2. Not suitable for use as an emergency shutoff valve

This mechanical valve is not designed for safety applications such as an emergency shutoff valve. If the valves are used for the mentioned applications, additional safety measures should be adopted.

Mounting

⚠ Warning

1. When installing the mechanical operation type mechanical valves, adjust the position so that the valves do not operate over the operating limit range.

Operating over the limit could damage the mechanical valve or actuator, and lead to equipment malfunction.

Mounting

⚠ Warning

2. P.T. depends on pressure or differences between the individual product specifications. In order to ensure that the valve opens, keep the operating stroke value for the mechanical operation type within the range specified by the following formula.

Operating stroke = (P.T. + 0.5 x O.T.) to (P.T. + O.T. – 0.1)

Operating Stroke Range

Series	Actuator type	Operating stroke (mm)
VM100	Basic	2.2 to 2.9
	Roller lever	4.3 to 5.4
	One way roller lever	4.3 to 5.4
	Straight plunger	2.7 to 3.4
	Roller plunger	2.7 to 3.4
	Cross roller plunger	2.7 to 3.4
VM200	Basic	4 to 4.9
	Roller lever	8.7 to 10.9
	One way roller lever	9.5 to 11.9
	Straight plunger	4.5 to 5.4
	Roller plunger	4.5 to 5.4
	Cross roller plunger	4.5 to 5.4

For straight and roller plunger types, there is a groove indicating P.T. and T.T. for stroke adjustment.

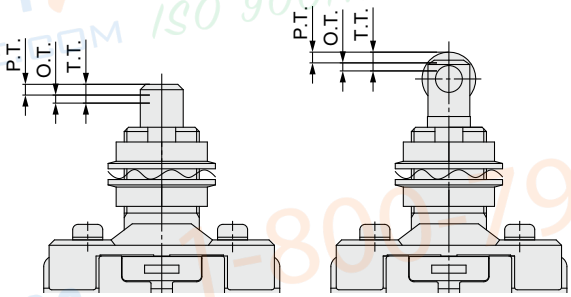

3. Do not make any alterations to the valve body, such as enlarging the body mounting holes.

As doing so could lead to unexpected abnormal conditions such as air leakage.

Operation

⚠ Warning

1. Operate the manual operation type mechanical valves (such as push button, twist selector and toggle lever types) with your finger.

The use of equipment such as a cylinder, cam or hammer, can result in the actuator and the valve being damaged.
Do not operate over the operation limit. If excessive operation force is applied over total travel position, actuator part can get deformed and lead to equipment malfunction.

Specific Product Precautions 2

Be sure to read before handling.
Refer to back cover for Safety Instructions and "Handling Precautions for SMC Products" (M-E03-3) for 3/4/5 Port Solenoid Valve Precautions.

Operation

⚠ Warning

2. When operating the mechanical operation type mechanical valves, select the angle and the maximum speed limit of cam and dog so that valves do not operate over the following maximum values.

If operated over the maximum values, impact force from cam and dog will be applied to the actuator, leading to damage of the actuator or the valve itself.

Cam and Dog

Series	Actuator type	Angle limit of cam and dog	Max. speed limit of cam and dog (m/s)
VM100	Roller lever	30°	0.7
		45°	0.3
	One way roller lever	30°	0.7
		45°	0.3
	Straight plunger	—	0.2
	Roller plunger	30°	0.3
	Cross roller plunger	30°	0.3
VM200	Roller lever	30°	0.7
		45°	0.3
	One way roller lever	30°	0.7
		45°	0.3
	Straight plunger	—	0.2
	Roller plunger	30°	0.3
	Cross roller plunger	30°	0.3

[Not acceptable] **[Acceptable]**

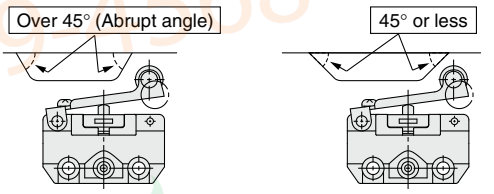

[Not acceptable] **[Acceptable]**

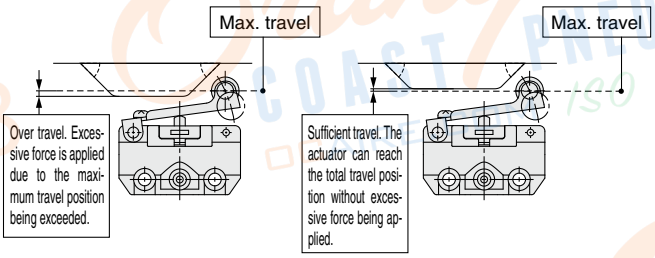

Cam and Dog Material

Roller material	Cam and dog material	Surface finish of cam and dog
Polyacetal	Steel	6.3 z or less
Hard steel	Steel, Resin	25 z or less

⚠ Caution

1. If the operating condition is maintained for long periods of time, it may take some time for the valve to restart due to the adherence of the seals and there might be a delay for recovery.

Air Supply

⚠ Warning

1. Operable fluid is either air or inert gas only.

It cannot be used for corrosive gas and fluid.

⚠ Caution

1. Grease is used for the inside of the valves.

Grease may enter into the outlet port of the valve.

2. When using vacuum pressure for the VM100, supply vacuum pressure to P port.

Operating Environment

⚠ Warning

1. Do not operate it in an area in which fluids such as oil, coolant, or water splash on it or dust comes in contact with it.

Because it does not have a waterproof or dustproof construction, fluids or dust could enter the valve, leading to malfunction. Therefore, take measures such as providing a protective cover to prevent direct exposure.

2. Do not expose the product to direct sunlight for an extended period of time.

Maintenance

⚠ Warning

1. Perform inspections on a regular basis as necessary, such as at the beginning of an operation, to make sure that the mechanical valve operates properly.

2. Do not disassemble, modify or repair the product.

This may lead to malfunction of equipment, injury and equipment damage. Please contact SMC for repairs and maintenance of the product.

Specific Product Precautions 3

Be sure to read before handling.
Refer to back cover for Safety Instructions and "Handling Precautions for SMC Products" (M-E03-3) for 3/4/5 Port Solenoid Valve Precautions.

How to Change the Buttons

⚠ Caution

Replace the button in the following manner to change color of the button.

1. Push button (Flush type)

- Installation —— Of the four colors, red, green, black, and yellow, select and align the protruding portion of the button with the recessed portion of the body and push in.
- Removal —— Remove the fastening ring and insert the tip of a small flat head screwdriver into the groove of the button to pry it up.

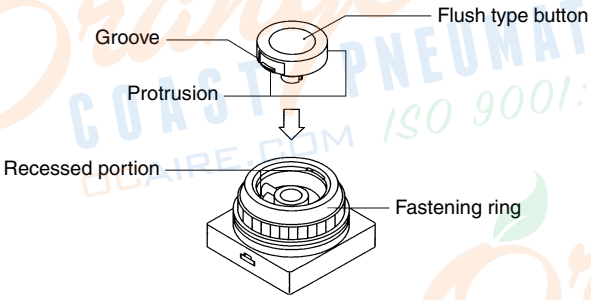

2. Push button (Mushroom and Extended types)

At the time of shipment, only 1 button of the color that you specified is attached to the body.

	Mushroom type	Extended type
Installation	Align the protruding portion of the button with the recessed portion of the body and push in. (Use the mark on the button as a reference to align the protruding part.)	Align the protruding portion of the button with the recessed portion of the body and push in.
Removal	Placing your finger under the collar of the button on the side of the mark, tilt it upward.	Remove the fastening ring and insert the tip of a small flat head screwdriver into the groove of the button to pry it up.

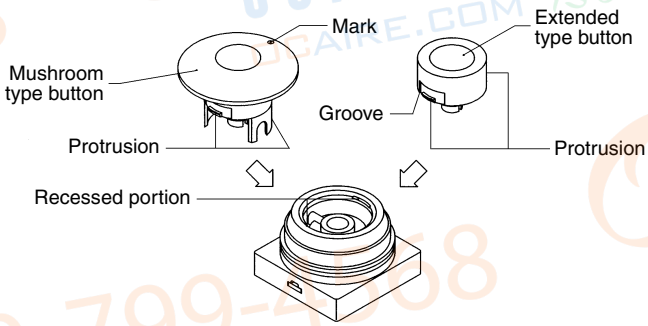

How to remove a mushroom type button

How to remove at panel mount

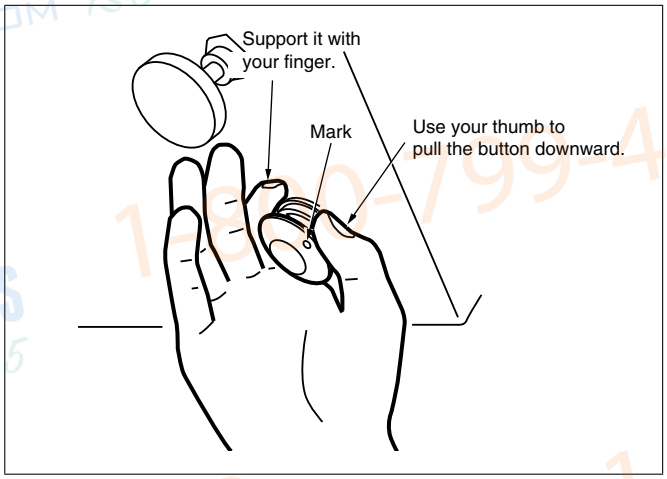

Removing the valve as a unit

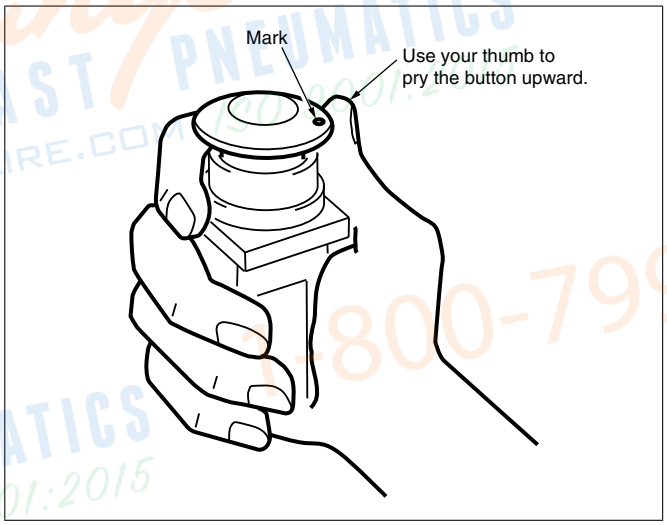

Replacement Parts

1. Use the part numbers listed below to order individual mushroom, extended, or flush type buttons.

Color	Mushroom type button	Extended type button
Red	3402186R	3402187R
Black	3402186B	3402187B
Green	3402186G	3402187G
Yellow	3402186Y	3402187Y

Color	Flush type button
Red	3402188R
Black	3402188B
Green	3402188G
Yellow	3402188Y

2. Use the part number below to order individual fastening ring.
   Fastening ring: 3402184

Specific Product Precautions 4

Be sure to read before handling.
Refer to back cover for Safety Instructions and "Handling Precautions for SMC Products" (M-E03-3) for 3/4/5 Port Solenoid Valve Precautions.

Series VM-X219 How to Mount Panel

[Task 1] Removing the push button and fastening ring

Remove them from the body turning them counterclockwise in the order of the push button and fastening ring.

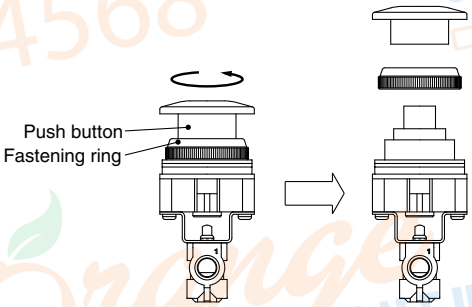

[Task 2] Mounting the valve to the panel

Insert the valve to the panel and fix it with a fastening ring.
Remove three spacers attached to the valve depending on the panel thickness.

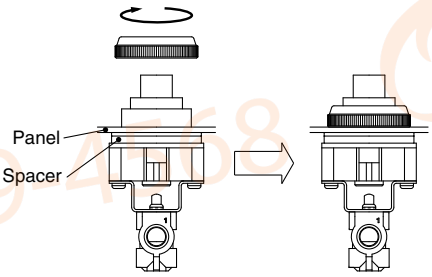

[Task 3] Mounting the push button

Tighten the push button clockwise by hand and further tighten it until load is applied.

Note) When the push button is not tightened enough, the valve may not output correctly after operating the push button. In other cases, the valve outputs temporarily, but when it is in the holding state, the valve may stop outputting. In this situation, tighten the push button again.

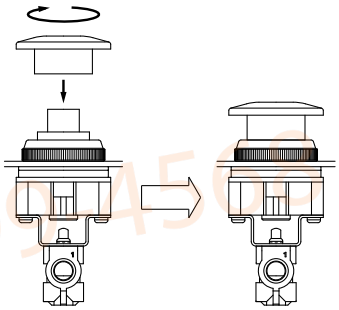

⚠ Safety Instructions

These safety instructions are intended to prevent hazardous situations and/or equipment damage. These instructions indicate the level of potential hazard with the labels of **"Caution," "Warning"** or **"Danger."** They are all important notes for safety and must be followed in addition to International Standards (ISO/IEC)*1), and other safety regulations.

⚠ Caution: **Caution** indicates a hazard with a low level of risk which, if not avoided, could result in minor or moderate injury.

⚠ Warning: **Warning** indicates a hazard with a medium level of risk which, if not avoided, could result in death or serious injury.

⚠ Danger : **Danger** indicates a hazard with a high level of risk which, if not avoided, will result in death or serious injury.

*1) ISO 4414: Pneumatic fluid power – General rules relating to systems.
ISO 4413: Hydraulic fluid power – General rules relating to systems.
IEC 60204-1: Safety of machinery – Electrical equipment of machines. (Part 1: General requirements)
ISO 10218-1: Manipulating industrial robots – Safety.
etc.

⚠ Warning

1. **The compatibility of the product is the responsibility of the person who designs the equipment or decides its specifications.**
   Since the product specified here is used under various operating conditions, its compatibility with specific equipment must be decided by the person who designs the equipment or decides its specifications based on necessary analysis and test results. The expected performance and safety assurance of the equipment will be the responsibility of the person who has determined its compatibility with the product. This person should also continuously review all specifications of the product referring to its latest catalog information, with a view to giving due consideration to any possibility of equipment failure when configuring the equipment.
2. **Only personnel with appropriate training should operate machinery and equipment.**
   The product specified here may become unsafe if handled incorrectly. The assembly, operation and maintenance of machines or equipment including our products must be performed by an operator who is appropriately trained and experienced.
3. **Do not service or attempt to remove product and machinery/equipment until safety is confirmed.**
   1. The inspection and maintenance of machinery/equipment should only be performed after measures to prevent falling or runaway of the driven objects have been confirmed.
   2. When the product is to be removed, confirm that the safety measures as mentioned above are implemented and the power from any appropriate source is cut, and read and understand the specific product precautions of all relevant products carefully.
   3. Before machinery/equipment is restarted, take measures to prevent unexpected operation and malfunction.
4. **Contact SMC beforehand and take special consideration of safety measures if the product is to be used in any of the following conditions.**
   1. Conditions and environments outside of the given specifications, or use outdoors or in a place exposed to direct sunlight.
   2. Installation on equipment in conjunction with atomic energy, railways, air navigation, space, shipping, vehicles, military, medical treatment, combustion and recreation, or equipment in contact with food and beverages, emergency stop circuits, clutch and brake circuits in press applications, safety equipment or other applications unsuitable for the standard specifications described in the product catalog.
   3. An application which could have negative effects on people, property, or animals requiring special safety analysis.
   4. Use in an interlock circuit, which requires the provision of double interlock for possible failure by using a mechanical protective function, and periodical checks to confirm proper operation.

⚠ Caution

1. **The product is provided for use in manufacturing industries.**
   The product herein described is basically provided for peaceful use in manufacturing industries.
   If considering using the product in other industries, consult SMC beforehand and exchange specifications or a contract if necessary.
   If anything is unclear, contact your nearest sales branch.

Limited warranty and Disclaimer/ Compliance Requirements

The product used is subject to the following "Limited warranty and Disclaimer" and "Compliance Requirements".
Read and accept them before using the product.

Limited warranty and Disclaimer

1. The warranty period of the product is 1 year in service or 1.5 years after the product is delivered, whichever is first.*2)
   Also, the product may have specified durability, running distance or replacement parts. Please consult your nearest sales branch.
2. For any failure or damage reported within the warranty period which is clearly our responsibility, a replacement product or necessary parts will be provided.
   This limited warranty applies only to our product independently, and not to any other damage incurred due to the failure of the product.
3. Prior to using SMC products, please read and understand the warranty terms and disclaimers noted in the specified catalog for the particular products.

   ***2) Vacuum pads are excluded from this 1 year warranty.**
   A vacuum pad is a consumable part, so it is warranted for a year after it is delivered.
   Also, even within the warranty period, the wear of a product due to the use of the vacuum pad or failure due to the deterioration of rubber material are not covered by the limited warranty.

Compliance Requirements

1. The use of SMC products with production equipment for the manufacture of weapons of mass destruction (WMD) or any other weapon is strictly prohibited.
2. The exports of SMC products or technology from one country to another are governed by the relevant security laws and regulations of the countries involved in the transaction. Prior to the shipment of a SMC product to another country, assure that all local rules governing that export are known and followed.

⚠ Safety Instructions	Be sure to read "Handling Precautions for SMC Products" (M-E03-3) before using.